© GRIMM AND PARKER, P.C. 2014

VICINITY MAP

ABBREVIATIONS

Above finished floor	AFF	Footing	FTG	Project	PROJ
Acoustic	ACST	Foundation	FDN	Property	PROP
Acoustic Panel Ceiling	APC	Furnish(ed), furniture	FURN	Public Address	PA
Addendum	ADD	Furring	FURR	Quality control	QC
Alternate	ALT	Gage (gauge)	GA	Quality	QUAL
Aluminum	AL	Galvanize(d)	GALV	Quantity	QTY
Angle	L	Galvanized Iron	GALVI	Quarry Tile	QT
Approximate	APPROX	Glazed Wall Tile	GWT	Radius	RAD
Architecture, architectural	ARCH	Grab Bar	GB	Rain Leader	RL
Asbestos	ASB	Grade	GR	Received	RCVD
Asphalt	ASPH	Gravel	GVL	Receptacle	RCPT
Assistant	ASST	Gypsum Wallboard	GWB	Receptionist	RECPT
Association	ASSN	Gypsum	GYP	Recess(ed)	REC
Automatic	AUTO	Handicapped	HC	Refer, reference	REF
Average	AVG	Hardware	HDW	Refrigerate, refrigerator	REFR
Base plate	BP	Heating ventilating and	HVAC	Reinforce	REINF
Basement	BSMT	air conditioning		Reinforced concrete	RC
Beam	BM	Height	HGT	Remove	RMV
Bearing	BRG	High Point	HPT	Repair	RPR
Bedroom	BR	High Performance	HP	Required	REQD
Benchmark	BM	High Performance Coating	HPC	Revise, revision	REV
Board	BD	Hollow Metal	HM	Right hand	RH
Boiler	BLR	Horizontal	HORIZ	Road	RD
Bottom	BOT	Include(d), inclusive	INCL	Roof Drain	RD
Brick	BRK	Incorporated	INC	Roof	RF
Building line	BL	Information	INFO	Roofing	RFG
Building	BLDG	Inside diameter	ID	Room	RM
Built-up-roof	BUR	Install(ed), installation	INSTL	Rubber tile floor	RTF
Cabinet	CAB	Insulation	INSUL	Rubber	RBR
Carpet	CPT	Interior	INT	Schedule	SCHED
Catalog	CAT	Janitor	JAN	Schematic	SCHEM
Ceiling height	CH	Joint	JT	Section	SECT
Ceiling	CLG	Joist	J, JST	Service	SVCE
Center	CTR	Junction box	JB	"Sheet, sheeting"	SHT
Centerline	CL	Knock down	KD	Shower	SH
Ceramic Tile	CT	Laboratory	LAB	Siding	SDG
Ceramic	CER	Lavatory	LAV	Similar	SIM
Chalkboard	CB	Left Hand	LH	Slope	SL
Clear	CLR	Left	L	Sound-transmission class	STC
Closet	CLO	Length	LG	South	S
Coated	CTD	Level	LVL	Speaker	SPKR
Cold rolled	CR	Light	LT	Specification	SPEC
Column	COL	Machine	MACH	Sprinkler	SPR
Company	CO	Maintenance	MAINT	Square	SQ
Composition	COMP	Manager	MGR	Stainless steel	SS
Concrete Masonry Unit	CMU	Manual	MNL	Standard	STD
Concrete	CONC	Manufacturing	MFG	Standpipe	SP
Construction joint	CJ	Markerboard	MB	Steel	STL
Construction	CONSTR	Masonry opening	MO	Storage	STOR
"Continue, Continuous"	CONT	Masonry	MSNRY	Structural Glazed Facing Tile	SGFT
Corridor	CORR	Master bedroom	MBR	Structural, structure	STRUCT
Countersink	CSK	Material	MATL	Substitute	SUBST
Cubic	CU	Maximum	MAX	Surface	SURF
Curve(d)	CRV	Mechanical	MECH	Suspend(ed)	SUSP
Dampproofing	DP	Membrane	MEMB	Switch	SW
Degree	DEG	Men	M	Symmetrical	SYM
Department(al)	DEPT	Metal	MET, MTL	System	SYS
Detail	DET	Mezzanine	MEZZ	Tackboard	TB
Diagonal	DIAG	Minimum	MIN	Tackstrip	TS
Diameter	DIA	Mirror	MIR	Telephone	TEL
Dimension	DIM	Miscellaneous	MISC	Television	TV
Dishwasher	DW	Mounted	MTD	Temporary	TEMP
Dispenser	DISP	Mounting	MTG	Terrazzo	TER
Door	DR	Necessary	NEC	Thick	THK
Double	DBL	Noise-reduction coefficient	NRC	Through	THRU
Double-hung	DH	Nominal	NOM	Toilet	T
Down	DN	Non Combustible	NC, NONCOM	Tongue and groove	T&G
Downspout	DS	North	N	Top and bottom	T&B
Drain	DR	Not in Contract	NIC	Top chord	TC
Drawing	DWG	Not to scale	NTS	Top of Masonry Parapet	TMP
Each	EA	Not available	NA	Top of Bearing	TOFB
East	E	Number	NO	Top of Steel	T.O.S.
Electric Water Cooler	EWC	Office	OFF	Topping	TOPG
"Electric, electrical"	ELEC	On center	OC	Total	TOT
Elevation	EL	Opening	OPNG	Transformer	XFMR
Elevator	ELEV	Opposite	OPP	Transom	TR
Engineer	ENGR	Outside diameter	OD	Transparent	TRANS
Entrance	ENTR	Overall	OA	Tread	TRD
Equal	EQ	Overhead	OVHD	Threshold	THRESH
Equipment	EQUIP	Page	P	Typical	TYP
Exhaust	EXH	Painted	PTD	Underground	UG
Existing	EXIST	Pair	PR	Underwriters Laboratories	UL
Expansion joint	EXP JT	Panel	PNL	Unfinished	UNF
Exposed	EXP	Partition	PTN	Unit Ventilator	UV
Exterior	EXT	Percent	PCT	Unless Otherwise Noted	UON
Fabricate	FAB	Perforate(d)	PERF	Urinal	UR
Face of Stud	F. OF S.	Permanent	PERM	US Gypsum Company	USG
Fan Coil Unit	FCU	Perpendicular	PERP	Vertical	VERT
Fiberglass-reinforced plastics	FRP	Piece	PC	Vestibule	VEST, V
Finish	FIN	Plastic Laminate	PLAM	Vinyl Reducing Strip	VRS
Finished Floor	FF	Plastic Laminate	PLAS.LAM	Vinyl Composite Tile	VCT
Fire Extinguisher	FE	Plate	PL	Vinyl asbestos tile	VAT
Fire Extinguisher & Cabinet	FEC	Plumbing	PLMB	Wardrobe	WARD
Fire Retardant Treated	FRT	Plywood	PLYWD	Water closet	WC
Fireproof	FPRF	Point	PT	Waterproof	WP
Fixture	FXTR	Polyvinyl chloride	PVC	Weight	WT
Flange	FLG	Precast	PRCST	Welded	WLD
Flashing	FL	Prefabricated	PREFAB	Welded Wire Mesh	WWM
Floor	FL	Preliminary	PRELIM	With	W/
Floor drain	FD	Preparation, prepare	PREP	Without	W/O
Flooring	FLG	Program	PRGM	Women	W
Fluorescent	FLUOR	Projection Screen	PS	Wood	WD
		Projector Board	PB	Wrought Iron	WI

SYMBOLS OF MATERIALS

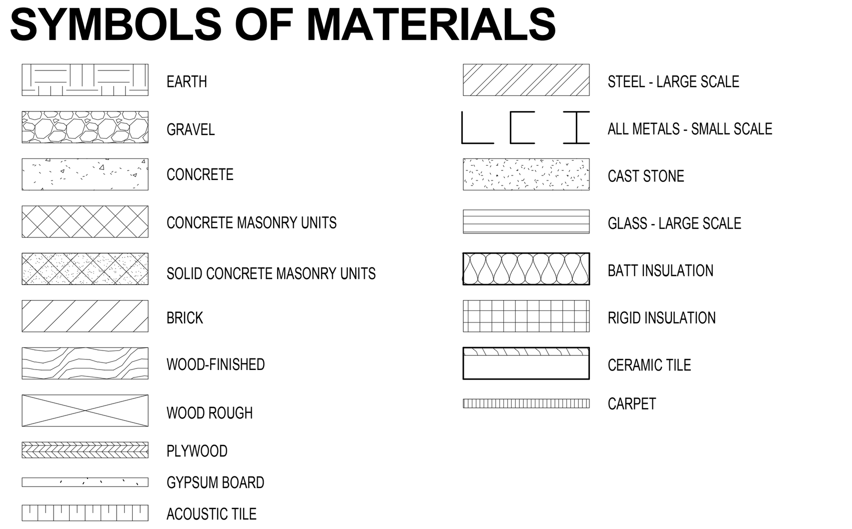

DRAWING KEY

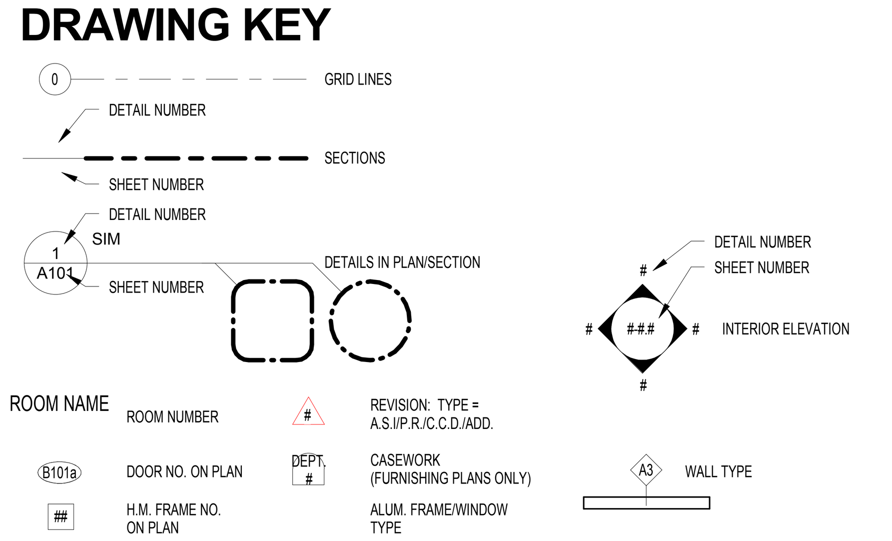

LANSDOWNE ELEMENTARY SCHOOL

2301 ALMA ROAD, BALTIMORE, MD

BID SET

NOVEMBER 17, 2016

PSC# 03.105.17

MBU-516-17

BOARD OF EDUCATION

MEP

CHARLES McDANIELS, Jr. Chair

EDWARD J. GILLISS, Esq. Vice Chair

S. DALLAS DANCE, Ph.D, Secretary-Treaurer

KATHLEEN S. CAUSE

MICHAEL J. COLLINS

JUNE P. EATON

MARISOL A. JOHNSON

ANN MILLER

NICHOLAS C. STEWART, Esq.

DAVID UHLFELDER

STEPHEN L. VERCH, Esq.

ROMAINE N. WILLIAMS, Esq.

DEEKSHA WALIA

DESIGN TEAM

GRIMM + PARKER ARCHITECTS	ARCHITECT
KCI TECHNOLOGIES	CIVIL ENGINEER
COLUMBIA ENGINEERING, INC	STRUCTURAL ENGINEER
JAMES POSEY ASSOCIATES, INC	MECHANICAL AND ELECTRICAL ENGINEER
NYIKOS ASSOCIATES	FOOD SERVICE
WRIGHT ENGINEERING	TECHNOLOGY CONSULTANT
SUSTAINABLE DESIGN CONSULTING, LLC	LEED CONSULTANT
FACILITY DYNAMICS	COMMISSIONING AGENT
GEOTECH ENGINEERS, INC	GEOTECHNICAL ENGINEER
HENNING ASSOCIATES, INC	ACOUSTICAL CONSULTANT
APPLIED ENVIRONMENTAL	INDUSTRIAL HYGENIST
EHT TRACERIES	HISTORIAN
FORELLA GROUP	COST ESTIMATOR
ERBSCHLOE CONSULTING SERVICES, INC	HARDWARE CONSULTANT

LIST OF DRAWINGS

TS	TITLE SHEET
CIVIL	
C-0.1	KEY PLAN
C-0.2	GENERAL NOTES
C-0.3A	EXISTING CONDITIONS/DEMOLITION PLAN - PHASE 1
C-0.3B	EXISTING CONDITIONS/DEMOLITION PLAN - PHASE 1
C-0.4A	PHASING PLAN - PHASE 1
C-0.4B	PHASING PLAN - PHASE 2
C-1.1	PROPOSED SITE AND GRADING PLAN - PHASE 1
C-1.2	PROPOSED SITE AND GRADING PLAN - PHASE 2
C-1.3	SITE DETAILS
C-1.4	SITE DETAILS
C-1.5	SITE DETAILS
C-1.6	SITE DETAILS
C-1.7	SITE DETAILS
C-1.8	SITE DETAILS
C-2.1	PAVING, STRIPING AND SIGNAGE PLAN
C-3.1	GEOMETRY PLAN - PHASE 1
C-3.2	GEOMETRY PLAN - PHASE 2
C-4.1	UTILITY PLAN
C-4.2	UTILITY PROFILES
C-4.3	UTILITY PROFILES
C-4.4	UTILITY PROFILES
C-4.5	UTILITY PROFILES
C-4.6	UTILITY PROFILES
C-5.1	STORM DRAIN DRAINAGE AREA MAP
C-6.1	EROSION AND SEDIMENT CONTROL PLAN - PHASE 1
C-6.2	EROSION AND SEDIMENT CONTROL PLAN - PHASE 2
C-6.3	EROSION AND SEDIMENT CONTROL - TRAP NO. 1 INSET PLAN
C-6.4	EROSION AND SEDIMENT CONTROL - TRAP NO. 2 INSET PLAN
C-6.5	EROSION AND SEDIMENT CONTROL - TRAP NO. 3 INSET PLAN
C-6.6	EROSION AND SEDIMENT CONTROL - TRAP NO. 4 INSET PLAN
C-6.7	TEMPORARY GABION OUTLET STRUCTURE INSET PLAN
C-6.8	EROSION AND SEDIMENT CONTROL DETAILS
C-6.9	EROSION AND SEDIMENT CONTROL DETAILS
C-6.10	EROSION AND SEDIMENT CONTROL DETAILS
C-6.11	EROSION AND SEDIMENT CONTROL DETAILS
C-6.12	EROSION AND SEDIMENT CONTROL NOTES
C-6.13	EROSION AND SEDIMENT CONTROL NOTES
C-7.1	STORMWATER MANAGEMENT PLAN
C-7.2	STORMWATER MANAGEMENT DETAILS
C-7.3	STORMWATER MANAGEMENT DETAILS
C-7.4	STORMWATER MANAGEMENT DETAILS
C-7.5	STORMWATER MANAGEMENT NOTES
C-7.6	STORMWATER MANAGEMENT NOTES
C-7.7	STORMWATER MANAGEMENT NOTES AND CERTIFICATIONS
C-7.8	STORMWATER MANAGEMENT BORING LOGS
C-8.1	LANDSCAPE PLAN
C-8.2	LANDSCAPE DETAILS
C-9.1	FOREST CONSERVATION PLAN
C-9.2	FOREST CONSERVATION NOTES AND DETAILS
C-10.1	PUBLIC WATER PLAN
C-10.2	PUBLIC SANITARY SEWER AND RIGHT-OF-WAY PLAN
C-10.3	PUBLIC STORM DRAIN PLAN - 1
C-10.4	PUBLIC STORM DRAIN PLAN - 2
C-10.5	PUBLIC STORM DRAIN PLAN - 3
ARCHITECTURAL	
A-0.1	FIRST FLOOR CODE STUDY
A-0.2	SECOND FLOOR CODE STUDY
A-0.3	FIRST FLOOR OVERALL PLAN
A-0.4	SECOND FLOOR OVERALL PLAN
A-0.5	OVERALL LAYOUT PLAN
A-0.6	ARCHITECTURAL SITE PLAN
A-0.7	SITE DETAILS
A-1.1A	PARTIAL FIRST FLOOR PLAN - AREA A
A-1.1B	PARTIAL FIRST FLOOR PLAN - AREA B
A-1.1C	PARTIAL FIRST FLOOR PLAN - AREA C
A-1.2B	PARTIAL SECOND FLOOR PLAN - AREA B
A-1.2C	PARTIAL SECOND FLOOR PLAN - AREA C
A-1.3	ROOF PLAN
A-1.4	ROOF DETAILS
A-1.5	ROOF DETAILS
A-2.1	EXTERIOR ELEVATIONS
A-2.2	EXTERIOR ELEVATIONS
A-2.3	EXTERIOR ELEVATIONS
A-2.4	EXTERIOR ELEVATIONS
A-2.5	OVERALL AXONOMETRIC VIEWS
A-3.1	FINISH SCHEDULE
A-3.2	DOOR SCHEDULE
A-3.3	HEAD, SILL, AND JAMB DETAILS
A-3.4	FRAME ELEVATIONS
A-3.5	FRAME ELEVATIONS
A-3.6	FRAME ELEVATIONS - INTERIOR
A-3.7	FRAME ELEVATIONS - INTERIOR
A-3.8	WALL TYPES AND TERMINATION DETAILS
A-3.9	STOREFRONT AND CURTAINWALL DETAILS
A-4.1	BUILDING SECTIONS
A-4.2	BUILDING SECTIONS
A-4.3	WALL SECTIONS
A-4.4	WALL SECTIONS
A-4.5	WALL SECTIONS
A-4.6	WALL SECTIONS
A-4.7	WALL SECTIONS
A-4.8	WALL SECTIONS
A-4.9	WALL SECTIONS
A-4.10	WALL SECTIONS
A-4.11	WALL SECTIONS
A-4.12	WALL SECTIONS
A-5.1	ENLARGED TOILET PLANS
A-5.2	STAIR PLANS AND SECTIONS
A-5.3	STAIR PLANS AND SECTIONS
A-5.4	STAIR DETAILS
A-5.5	TYPICAL DETAILS
A-5.6	PLAN DETAILS
A-5.7	PLAN DETAILS
A-6.1	INTERIOR ELEVATIONS
A-6.2	INTERIOR ELEVATIONS
A-6.3	INTERIOR ELEVATIONS
A-6.4	INTERIOR ELEVATIONS
A-6.5	INTERIOR ELEVATIONS
A-6.6	INTERIOR ELEVATIONS
A-7.1A	PARTIAL FIRST FLOOR CEILING PLAN - AREA A
A-7.1B	PARTIAL FIRST FLOOR CEILING PLAN - AREA B
A-7.1C	PARTIAL FIRST FLOOR CEILING PLAN - AREA C
A-7.2B	PARTIAL SECOND FLOOR CEILING PLAN - AREA B
A-7.2C	PARTIAL SECOND FLOOR CEILING PLAN - AREA C
A-8.1	ALTERNATES
A-9.0	EQUIPMENT AND FURNISHING SCHEDULES
A-9.1A	PARTIAL FIRST FLOOR FURNITURE PLAN - AREA A
A-9.1B	PARTIAL FIRST FLOOR FURNITURE PLAN - AREA B
A-9.1C	PARTIAL FIRST FLOOR FURNITURE PLAN - AREA C
A-9.2C	PARTIAL SECOND FLOOR FURNITURE PLAN - AREA C
A-9.3	MILLWORK/INTERIOR DETAILS
KITCHEN	
K101	KITCHEN EQUIPMENT PLAN
K102	BUILDING CONDITIONS & VENTILATION PLAN
K103	PLUMBING ROUGH-IN PLAN
K104	ELECTRICAL ROUGH-IN PLAN
K501	EXHAUST CANOPY DETAILS
STRUCTURAL	
S-0.1	GENERAL NOTES
S-0.2	INSPECTION TABLES
S-1.1A	FOUNDATION AND SLAB ON GRADE PLAN - AREA A
S-1.1B	FOUNDATION AND SLAB ON GRADE PLAN - AREA B
S-1.1C	FOUNDATION AND SLAB ON GRADE PLAN - AREA C
S-1.2A	SECOND FLOOR AND LOW ROOF FRAMING PLAN - AREA A
S-1.2B	SECOND FLOOR AND LOW ROOF FRAMING PLAN - AREA B
S-1.2C	SECOND FLOOR AND LOW ROOF FRAMING PLAN - AREA C
S-1.3A	HIGH ROOF FRAMING PLAN - AREA A
S-1.3B	HIGH ROOF FRAMING PLAN - AREA B
S-1.3C	HIGH ROOF FRAMING PLAN - AREA C
S-2.1	BRACED FRAME ELEVATIONS AND DETAILS
S-3.1	TYPICAL DETAILS FOUNDATION AND SLAB ON GRADE
S-3.2	TYPICAL DETAILS STRUCTURE
S-3.3	TYPICAL DETAILS MASONRY
S-4.1	SECTIONS
S-4.2	SECTIONS
S-5.1	SECTIONS
S-5.2	SECTIONS
S-5.3	SECTIONS
S-5.4	SECTIONS
S-5.5	SECTIONS
S-5.6	SECTIONS
MECHANICAL	
ME-0.1	SITE PLAN, VICINITY MAP, PART PLANS, AND DETAIL
M-0.1	MECHANICAL SYMBOLS AND ABBREVIATIONS
M-1.1A	PARTIAL FIRST FLOOR PLAN - AREA A - HVAC
M-1.1B	PARTIAL FIRST FLOOR PLAN - AREA B - HVAC
M-1.1C	PARTIAL FIRST FLOOR PLAN - AREA C - HVAC
M-1.2C	PARTIAL SECOND FLOOR PLAN - AREA C - HVAC
M-1.3	ROOF PLAN - HVAC
M-2.1A	PARTIAL FIRST FLOOR PLAN - AREA A - PIPING
M-2.1B	PARTIAL FIRST FLOOR PLAN - AREA B - PIPING
M-2.1C	PARTIAL FIRST FLOOR PLAN - AREA C - PIPING
M-2.2C	PARTIAL SECOND FLOOR PLAN - AREA C - PIPING
M-4.1	PART PLANS - HVAC
M-4.2	PART PLANS - HVAC
M-5.1	DETAILS AND DIAGRAMS
M-5.2	DETAILS AND DIAGRAMS
M-5.3	DETAILS AND DIAGRAMS
M-6.1	SCHEDULES
M-6.2	SCHEDULES
M-6.3	SCHEDULES
M-6.4	SCHEDULES
M-7.1	AUTOMATIC TEMPERATURE CONTROLS
M-7.2	AUTOMATIC TEMPERATURE CONTROLS
M-7.3	AUTOMATIC TEMPERATURE CONTROLS
M-7.4	AUTOMATIC TEMPERATURE CONTROLS
PLUMBING	
P-0.1	LEGEND, SYSMBOLS AND ABBREVIATIONS
P-1.1A	PARTIAL FIRST FLOOR PLAN - AREA A - PLUMBING
P-1.1B	PARTIAL FIRST FLOOR PLAN - AREA B - PLUMBING
P-1.1C	PARTIAL FIRST FLOOR PLAN - AREA C - PLUMBING
P-1.2C	PARTIAL SECOND FLOOR PLAN - AREA C - PLUMBING
P-1.3	ROOF PLAN - PLUMBING
P-4.1	PART PLANS
P-4.2	PART PLANS
P-4.3	PART PLANS
P-5.1	DETAILS AND DIAGRAMS
P-5.2	DETAILS AND DIAGRAMS
P-5.3	DETAILS AND DIAGRAMS
P-6.1	SCHEDULES
FIRE PROTECTION	
FP-1.1	FIRST FLOOR PLAN AND NOTES - FIRE PROTECTION
FP-1.2	SECOND FLOOR PLAN, DETAILS AND DIAGRAMS - FIRE PROTECTION
ELECTRICAL	
E-0.1	SYMBOLS LIST AND ABBREVIATIONS
E-1.1A	FIRST FLOOR PLAN - AREA A - LIGHTING
E-1.1B	FIRST FLOOR PLAN - AREA B -LIGHTING
E-1.1C	FIRST FLOOR PLAN - AREA C -LIGHTING
E-1.2C	SECOND FLOOR PLAN - AREA C - LIGHTING
E-2.1A	FIRST FLOOR PLAN - AREA A - POWER
E-2.1B	FIRST FLOOR PLAN - AREA B - POWER
E-2.1C	FIRST FLOOR PLAN - AREA C - POWER
E-2.2C	SECOND FLOOR PLAN - AREA C - POWER
E-2.3	ROOF PLAN
E-3.1A	FIRST FLOOR PLAN - AREA A - FIRE ALARM
E-3.1B	FIRST FLOOR PLAN - AREA B - FIRE ALARM
E-3.1C	FIRST FLOOR PLAN - AREA C - FIRE ALARM
E-3.2C	SECOND FLOOR PLAN - AREA C - FIRE ALARM
E-4.1	PART PLANS
E-5.1	DETAILS
E-5.2	DETAILS
E-5.3	DETAILS
E-6.1	DIAGRAMS
E-6.2	SCHEDULES
E-6.3	SCHEDULES
E-6.4	SCHEDULES
E-6.5	SCHEDULES
E-7.1	LIGHTING FIXTURE SCHEDULE
E-7.2	LIGHTING CONTROLS SCHEME SCHEDULES
E-7.3	LIGHTING CONTROLS DIAGRAMS
E-7.4	LIGHTING CONTROLS DIAGRAMS
E-7.5	LIGHTING CONTROLS DIAGRAMS
E-8.1	ALTERNATES
TELECOMMUNICATIONS	
T-0.1	SYMBOLS, LEGENDS AND ABBREVIATIONS - TELECOM
T-0.2	SITE PLAN - TELECOM
T-1.1A	PARTIAL FIRST FLOOR PLAN - AREA A - TELECOM
T-1.1B	PARTIAL FIRST FLOOR PLAN - AREA B - TELECOM
T-1.1C	PARTIAL FIRST FLOOR PLAN - AREA C - TELECOM
T-1.2A	PARTIAL SECOND FLOOR PLAN - AREA A - TELECOM
T-1.2B	PARTIAL SECOND FLOOR PLAN - AREA B - TELECOM
T-1.2C	PARTIAL SECOND FLOOR PLAN - AREA C - TELECOM
T-4.1	RISERS - TELECOM
T-5.1	DETAILS - TELECOM
T-5.2	DETAILS - TELECOM
T-5.3	DETAILS - TELECOM
T-5.4	DETAILS - TELECOM
T-5.5	DETAILS - TELECOM
T-5.6	DETAILS - TELECOM
T-5.7	DETAILS - TELECOM

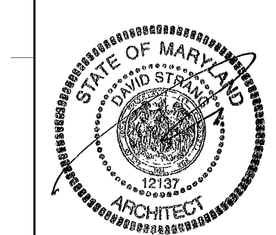

11720 Beltsville Drive
Suite 600
Calverton, MD 20705
Tel: 301.595.1000
www.grimmandparker.com

G+P GRIMM AND PARKER

GP #21541

TITLE SHEET

LANSDOWNE ELEMENTARY SCHOOL
2301 ALMA ROAD, BALTIMORE, MD

DATE	DESCRIPTION

TS

11/17/16
BID SET

© GRIMM AND PARKER, P.C. 2014

© GRIMM AND PARKER, P.C. 2014

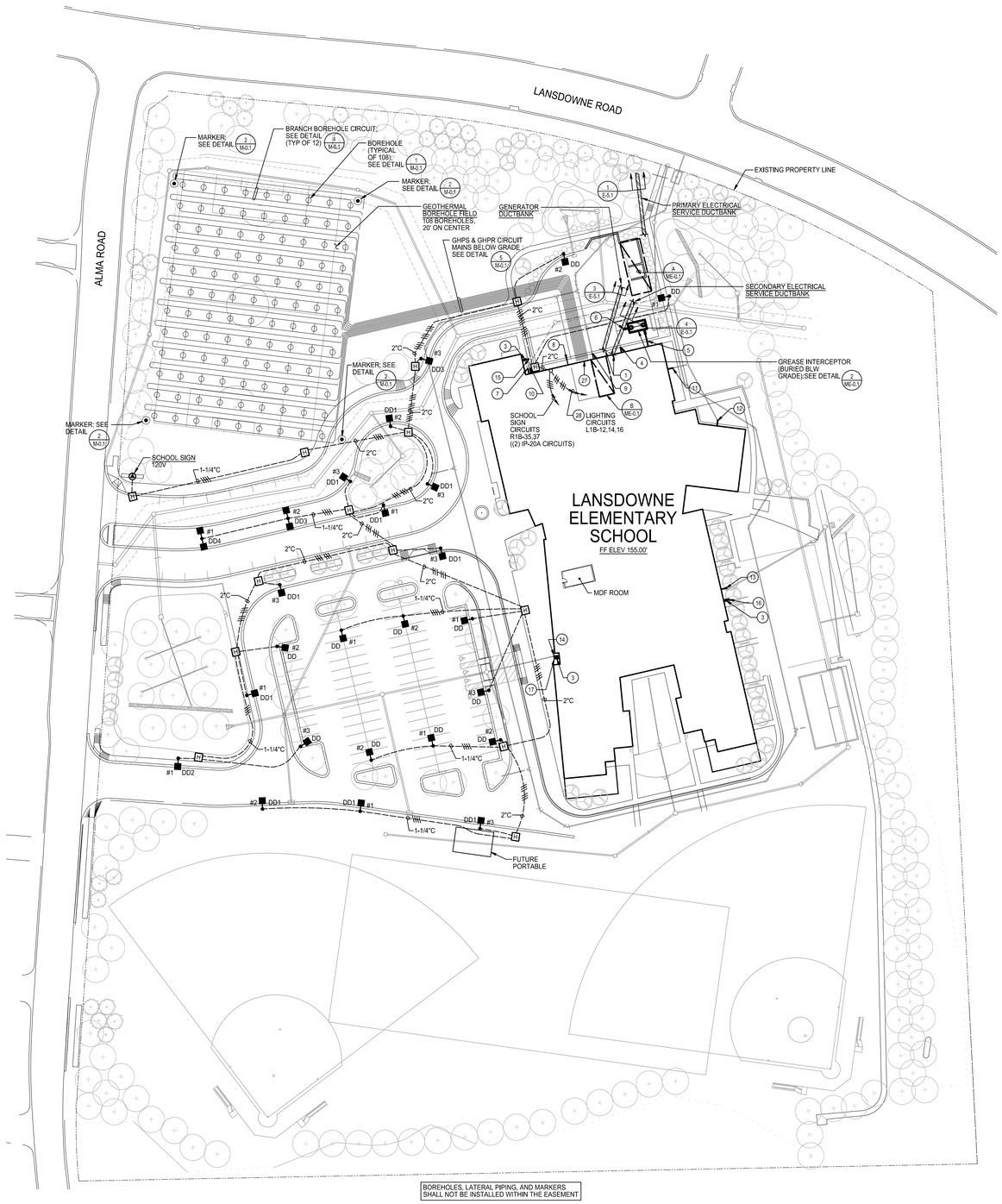

BOREHOLES, LATERAL PIPING, AND MARKERS SHALL NOT BE INSTALLED WITHIN THE EASEMENT

1 / ME-0.1 SITE PLAN
SCALE: 1" = 50'-0"

NORTH

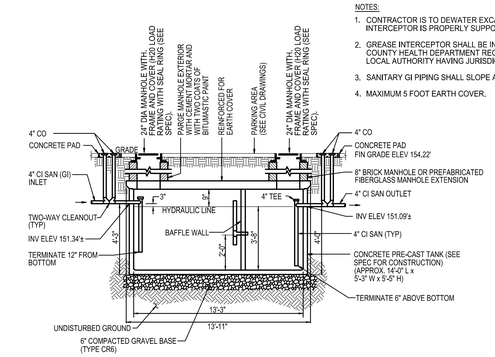

2 / ME-0.1 DETAIL
1,500 GALLON FATS, OILS AND GREASE INTERCEPTOR (GRAVITY TYPE)
NOT TO SCALE

NOTES:

1. CONTRACTOR IS TO DEWATER EXCAVATION SITE UNTIL INTERCEPTOR IS PROPERLY SUPPORTED AND BALLASTED.
2. GREASE INTERCEPTOR SHALL BE INSTALLED PER BALTIMORE COUNTY HEALTH DEPARTMENT REGULATIONS AND THE LOCAL AUTHORITY HAVING JURISDICTION.
3. SANITARY GI PIPING SHALL SLOPE AT 2%.
4. MAXIMUM 5 FOOT EARTH COVER.

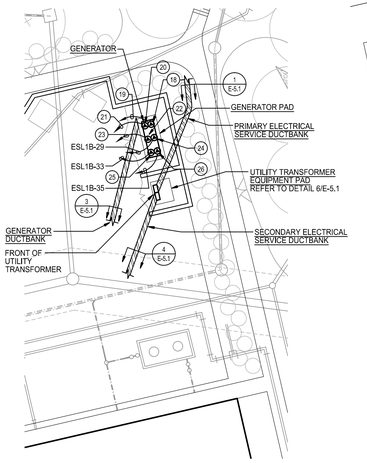

A / ME-0.1 PART SITE PLAN
SCALE: 1"=20'-0"

NORTH

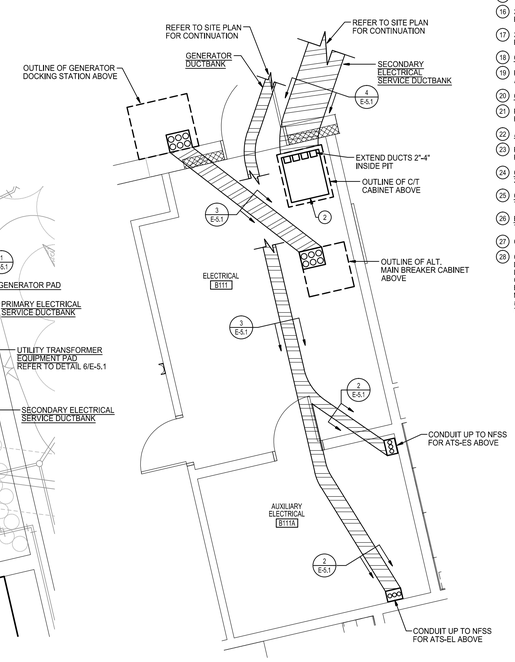

B / ME-0.1 PART FLOOR PLAN
CONDUITS AND PIPING BELOW FLOOR
SCALE: 1/4"=1'-0"

NORTH

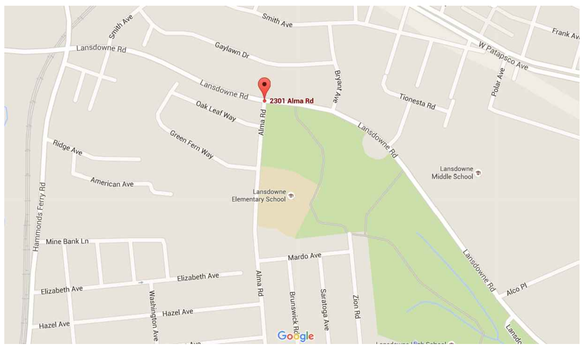

VICINITY MAP
NOT TO SCALE

SCALE: 1/4" = 1'-0"

SCALE: 1" = 20'-0"

SCALE: 1" = 50'-0"

GENERAL NOTES:

A. INFORMATION SHOWN ON THIS DRAWING PERTAINING TO EXISTING CONDITIONS HAS BEEN OBTAINED FROM AVAILABLE BUILDING DRAWINGS OR GENERAL FIELD OBSERVATIONS AND MAY NOT INDICATE EXISTING CONDITIONS IN DETAIL OR DIMENSION. DETERMINE EXISTING CONDITIONS PRIOR TO FABRICATION OR PERFORMANCE OF ANY WORK. SHOULD CONDITIONS BE DISCOVERED THAT PREVENT EXECUTION OF THE WORK AS INDICATED, IMMEDIATELY NOTIFY THE ARCHITECT IN WRITING AND AWAIT DIRECTION BEFORE PROCEEDING WITH THE WORK.

B. DO NOT LOCATE DUCTWORK OR PIPING ABOVE ELECTRICAL PANELS OR EQUIPMENT.

C. UNDERGROUND ELECTRICAL CONDUIT: PROVIDE SIZES INDICATED ON SITE PLAN. WHERE SIZE IS NOT INDICATED, PROVIDE 1" CONDUIT.

- UNDER ROADS AND RETAINING WALLS: PROVIDE CONDUIT IN CONCRETE-ENCASED DUCTBANK.
- UNDER SIDEWALKS AND UNPAVED SURFACES: PROVIDE DIRECT-BURIED CONDUIT.

SPECIFIC NOTES:

1. REFER TO PART FLOOR PLAN B/ME-0.1 FOR DUCTBANK CONTINUATION.
2. PROVIDE 24" DEEP (DOWN FROM FINISHED FLOOR) CONCRETE LINED PIT. LENGTH AND WIDTH OF PIT SHALL MEASURE 1" LESS THAN C/T CABINET DIMENSION. PIT CONSTRUCTION SHALL BE IN ACCORDANCE WITH BGE SPECIFICATIONS.
3. 2" BACKWATER VALVE IN SERVICE VALVE BOX.
4. SANITARY OUTFALL 2 - 4" SAN; INV ELEV 145.75', 179 DFU/6,490 GPD.
5. SANITARY OUTFALL 3 - 4" SAN (GI); INV ELEV 151.85', 28 DFU/1,125 GPD.
6. 4" SAN; INV ELEV 151.03'.
7. SANITARY OUTFALL 1 - 6" SAN; INV ELEV 143.17', 328 DFU/12,200 GPD.
8. 4" DOMESTIC WATER SERVICE ENTRANCE; INV ELEV 150.08'.
9. 6" WATER SERVICE FOR FIRE PROTECTION; INV ELEV 150.00'.
10. STORM WATER OUTFALL 1 - 8" SW; INV ELEV 150.96', 13,600 SQ. FT.
11. STORM WATER OUTFALL 2 - 8" SW; INV ELEV 151.50', 11,230 SQ. FT.
12. STORM WATER OUTFALL 3 - 4" SW; INV ELEV 151.90', 2,370 SQ. FT.
13. STORM WATER OUTFALL 4 - 8 " SW; INV ELEV 149.57', 12,725 SQ. FT.
14. STORM WATER OUTFALL 5 - 10" SW; INV ELEV 151.54', 23,250 SQ. FT.
15. 2" CO; INV ELEV 151.87'.
16. 2" CO; INV ELEV 152.30', CONNECTS TO SW OUTFALL WITHIN 5 FEET OF BUILDING EXTERIOR WALL.
17. 2" CO; INV ELEV 152.05', CONNECTS TO SW OUTFALL WITHIN 5 FEET OF BUILDING EXTERIOR WALL.
18. GENERATOR REMOTE ANNUNCIATOR COMMUNICATIONS.
19. PROVIDE 8 CONDUCTOR, 18AWG, STP CABLE TO GENERATOR REMOTE ANNUNCIATOR. PROVIDE FINAL CONNECTIONS.
20. GENERATOR REMOTE ANNUNCIATOR POWER.
21. PROVIDE 2#14-3/4"C TO GENERATOR REMOTE ANNUNCIATOR. PROVIDE FINAL CONNECTIONS.
22. ATS REMOTE START CIRCUIT.
23. PROVIDE 2#14-3/4"C TO ATS REMOTE START TERMINALS. PROVIDE FINAL CONNECTIONS.
24. GENERATOR BLOCK HEATER 2.5KW-208V-1Ø
25. GENERATOR ACCESSORIES 120V
26. BATTERY CHARGER 120V
27. GHPS/GHPR CIRCUIT PIPING BUILDING ENTRANCE; SEE DIAGRAM 3/M-0.1
28. CONNECT THE FIRST LIGHTING CIRCUIT TO LIGHT POLES DESIGNATED WITH #1. CONNECT THE SECOND LIGHTING CIRCUIT TO LIGHT POLES DESIGNATED WITH #2. CONNECT THE THIRD LIGHTING CIRCUIT TO LIGHT POLES DESIGNATED WITH #3. PROVIDE JUNCTION BOX ADJACENT TO PANEL L1B TO SPLICE #6 WIRING TO #8 WIRING AND MAKE CONNECTIONS TO CIRCUIT BREAKERS WITH #8 WIRING. PROVIDE #6 WIRING IN CONDUIT FROM JUNCTION BOX (ADJACENT TO PANEL L1B) TO LIGHT POLES.

James Posey Associates
Engineering Your Vision
Mechanical & Electrical Engineers
jamesposey.com
3112 Lord Baltimore Drive
Baltimore, MD 21244
tel 410-265-6100
fax 410-298-9820

Professional Certification. I hereby certify that these documents were prepared or approved by me, and that I am a duly licensed professional engineer under the laws of the state of Maryland. License No. 33986. Expiration date: 01-15-2017.

JPA PROJECT NO. 6542-15

GRIMM AND PARKER
11720 Beltsville Drive
Suite 600
Calverton, MD 20705
Tel: 301.595.1000
www.grimmandparker.com

GP #21541

SITE PLAN, VICINITY MAP, PART PLANS, AND DETAIL
LANSDOWNE ELEMENTARY SCHOOL
2301 ALMA ROAD, BALTIMORE, MD

DATE	DESCRIPTION

ME-0.1
11/17/16
BID SET

November 10, 2016 10:18 a.m.
Drawing: C:\USERS\JEANS\APPDATA\LOCAL\TEMP\MORPHOS\0_{7F96F6F6-A9A2-4AE3-13A6_E1A9

© 2016 James Posey Associates, Inc.

© GRIMM AND PARKER, P.C. 2014

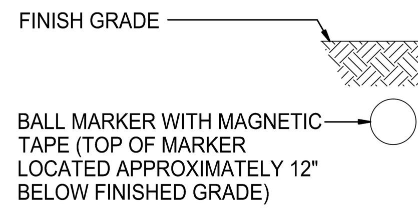

DETAIL 2 M-0.1
TYPICAL BOREHOLE MARKER
NOT TO SCALE

REFER TO SPECIFICATION SECTION 02521 FOR INSTALLATION REQUIREMENTS.

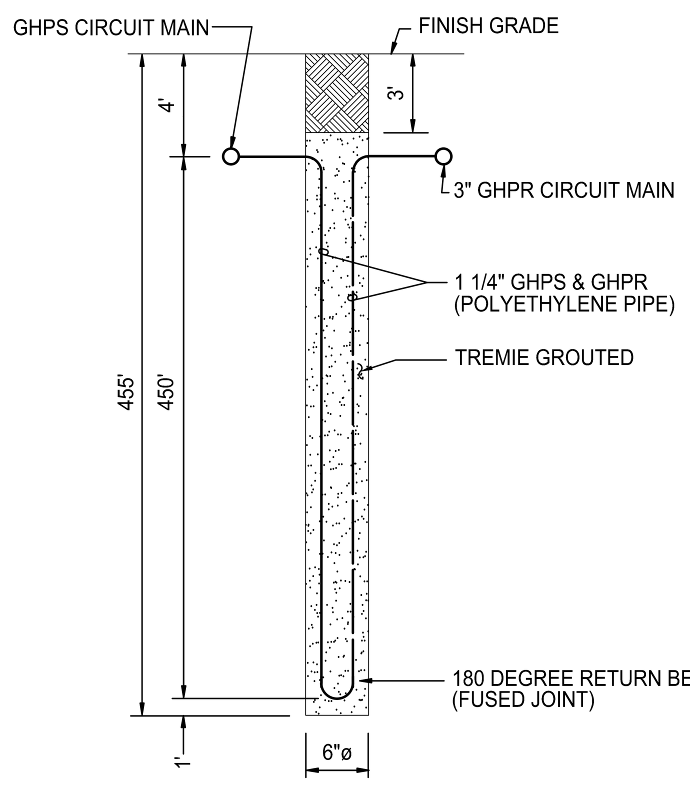

DETAIL 1 M-0.1
TYPICAL VERTICAL BOREHOLE
NOT TO SCALE

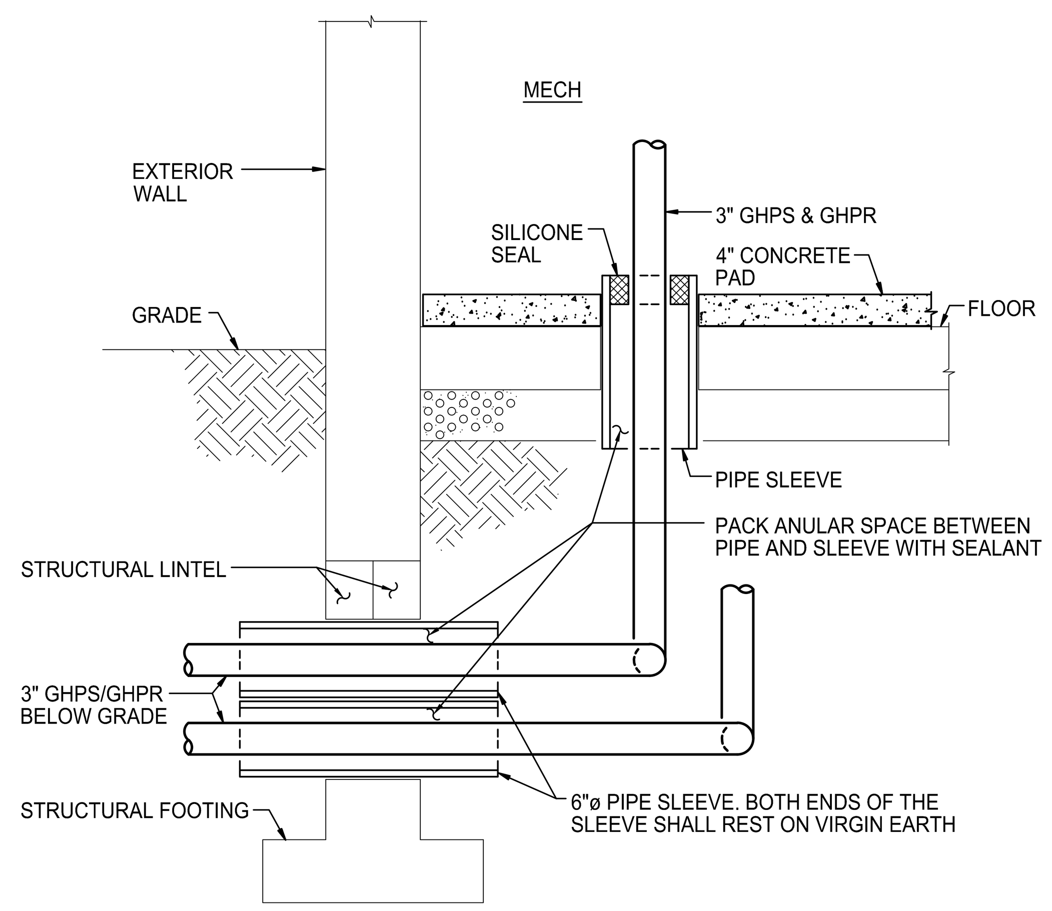

DETAIL 3 M-0.1
GHPS/GHPR CIRCUIT PIPING BUILDING ENTRANCE
NOT TO SCALE

MECHANICAL SYMBOLS AND ABBREVIATIONS

Symbol	Description
— LS —	HEAT PUMP LOOP SUPPLY PIPE
— LR —	HEAT PUMP LOOP RETURN PIPE
— GHPS —	GROUND HEAT EXCHANGER SUPPLY PIPE
— GHPR —	GROUND HEAT EXCHANGER RETURN PIPE
	PIPE CAP OR PLUG
	UNION
	FLANGED PIPE CONNECTION
	PIPE ANCHOR
	PIPE GUIDE
	FLEXIBLE CONNECTION (PIPING)
	EXPANSION JOINT
	CONCENTRIC REDUCER
	FLOW DIRECTION ARROW
	STRAINER
	SHUT-OFF VALVE
	VALVE IN VERTICAL PIPE
	BALANCING VALVE
	2-WAY AUTOMATIC TEMPERATURE CONTROL (ATC) VALVE
	3-WAY AUTOMATIC TEMPERATURE CONTROL (ATC) VALVE
30 PSI	PRESSURE RELIEF VALVE (NUMERALS INDICATE SETTING)
	GAUGE COCK
0°-100° F	THERMOMETER (NUMERALS INDICATE GRADUATION RANGE)
5-60 PSI	PRESSURE GAUGE (NUMERALS INDICATE GRADUATION RANGE)
F 20 GPM	FLOW METER FITTING (METER WHERE NOTED) (NUMERALS INDICATE FLOW REQUIRED)
	AIR VENT (AAV WHERE NOTED)
FS	FLOW SWITCH
	CHECK VALVE; (ARROWHEAD INDICATES DIRECTION OF FLOW)
SPS	STATIC PRESSURE SENSOR
E	EMERGENCY FAN DISCONNECT SWITCH
	THERMOSTAT, TEMPERATURE SENSOR OR OR WALL MOUNTED CONTROLLER (VRF OR DSS)
H	HUMIDITY SENSOR
CO_2	CO_2 (CARBON DIOXIDE SENSOR)
	POINT OF CONNECTION, NEW TO EXISTING
	DEMOLITION WORK TERMINATION POINT
1	SYMBOL FOR SPECIFIC NOTE. NOTE APPLIES TO DRAWING ON WHICH IT OCCURS.
	PRESSURE/TEMPERATURE PORT
18"x12"	DUCT (SIZE IN INCHES, FIRST FIGURE SIDE SHOWN)
	SUPPLY OR OUTDOOR AIR DUCT SECTION
	RETURN OR EXHAUST AIR DUCT SECTION
	DOUBLE WALL OR ACOUSTICALLY LINED DUCT; (DIMENSIONS SHOWN ARE OUTER WALL SHEET METAL SIZE)
	AUTOMATIC TEMPERATURE CONTROL (ATC) DAMPER
	MANUAL VOLUME DAMPER
	FIRE DAMPER
F/S	FIRE/SMOKE DAMPER
S	SMOKE DAMPER
SD	SMOKE DETECTOR
	AIR DEVICE WITH 2'x2' LAY-IN PANEL
	SQUARE TO ROUND TRANSITION
D	INCLINED DROP IN DIRECTION OF ARROW
R	INCLINED RISE IN DIRECTION OF ARROW
	FLEXIBLE CONNECTION (DUCTWORK)
	ROUND FLEXIBLE DUCT
	ROUND STRAIGHT DUCT TAP FITTING WITH MANUAL VOLUME DAMPER CONNECTING TO RECTANGULAR DUCT
	ROUND CONICAL DUCT TAP FITTING WITH MANUAL VOLUME DAMPER CONNECTING TO RECTANGULAR DUCT
	ROUND CONICAL DUCT TAP FITTING CONNECTING TO RECTANGULAR DUCT
	RECTANGULAR 45 DEGREE DUCT TAP FITTING
A	SOUND ATTENUATOR. LETTER DESIGNATES SPECIFIC UNIT. SEE SCHEDULE.
	INDICATES PIPING DIAGRAM
3/9	DETAIL OR DIAGRAM NO. 3 SHOWN ON DRAWING NO. 9
3/7 9	SECTION NO. 3 FROM DRAWING NO. 7 SHOWN ON DRAWING NO. 9 (ARROW DENOTES SECTION)

Abbreviation	Meaning
Ø	INDICATES DIAMETER
A/D	ACCESS DOOR
A/L	ACOUSTICALLY LINED
AAV	AUTOMATIC AIR VENT
ABV	ABOVE
AFF	ABOVE FINISHED FLOOR
AHU	AIR HANDLING UNIT
ALUM	ALUMINUM
APD	AIR PRESSURE DROP
ASSOC	ASSOCIATED
ATC	AUTOMATIC TEMPERATURE CONTROL
AWT	AVERAGE WATER TEMPERATURE
BDD	BACKDRAFT DAMPER
BLDG	BUILDING
BLW	BELOW
BTM	BOTTOM
BTUH	BRITISH THERMAL UNITS PER HOUR
BV	BALANCING VALVE
CA	CONDITIONED OUTDOOR AIR
CFM	CUBIC FEET PER MINUTE
CLG	CEILING
CONC	CONCRETE
CONN	CONNECT, CONNECTION
CONT'N	CONTINUATION
CV	CHECK VALVE
DB	DRY BULB
DDC	DIRECT DIGITAL CONTROL
DEG	DEGREES
DESG	DESIGNATION
DHC	DUCT HEATING COIL
DIA	DIAMETER
DW	DOUBLE WALL
DWG	DRAWING
EA	EXHAUST AIR
EAT	ENTERING AIR TEMPERATURE
ECUH	ELECTRIC CABINET UNIT HEATER
EDB	ENTERING DRY BULB
EPUH	ELECTRIC PROPELLER UNIT HEATER
EF	EXHAUST FAN
EG	EXHAUST GRILLE
EJ	EXPANSION JOINT
ELEC	ELECTRIC
ELEV	ELEVATION OR ELEVATOR
ER	EXHAUST REGISTER
ESP	EXTERNAL STATIC PRESSURE
ETR	EXISTING TO REMAIN
EWB	ENTERING WET BULB
EWH	ELECTRIC WALL HEATER
EWT	ENTERING WATER TEMPERATURE
EX	EXISTING
EXH	EXHAUST
EXP	EXPANSION
F/D	FIRE DAMPER
F/S	FIRE/SMOKE DAMPER
F	FAHRENHEIT OR FIRE LINE PIPE
FD	FLOOR DRAIN
FL	FLOOR
FLA	FULL LOAD AMPERES
FOB	FLAT ON BOTTOM
FOT	FLAT ON TOP
FPS	FEET PER SECOND
FT	FEET
FT HD	FEET OF HEAD
FU	FIXTURE UNITS
GALV	GALVANIZED
GHPR	GROUND HEAT EXCHANGER RETURN PIPE
GHPS	GROUND HEAT EXCHANGER SUPPLY PIPE
GPM	GALLONS PER MINUTE
GR	GRILLE
HP	HORSEPOWER
IN	INCH, INCHES
INV	INVERT
LAT	LEAVING AIR TEMPERATURE
LB(S)	POUND(S)
LDB	LEAVING DRY BULB
LF	LINEAR FEET
LR	HEAT PUMP LOOP RETURN PIPE
LRA	LOCKED ROTOR AMPERES
LS	HEAT PUMP LOOP SUPPLY PIPE
LSD	LINEAR SLOT DIFFUSER
LWB	LEAVING WET BULB
LWT	LEAVING WATER TEMPERATURE
MAX	MAXIMUM
MBH	THOUSAND BTU'S PER HOUR
MCA	MINIMUM CIRCUIT AMPACITY
MECH	MECHANICAL
MF/D	MOTORIZED FIRE DAMPER
MFR	MANUFACTURER
MIN	MINIMUM
MOP	MAXIMUM OVERCURRENT PROTECTION
MTD	MOUNTED
MVD	MANUAL VOLUME DAMPER
NC	NORMALLY CLOSED
NIC	NOT IN CONTRACT
NO	NORMALLY OPEN
OAI	OUTDOOR AIR INTAKE
OA	OUTDOOR AIR
OC	ON CENTER
OED	OPEN END DUCT WITH 1/2" FRAMED WIRE MESH SCREEN
OFD	OVERFLOW DRAIN
PD	PRESSURE DROP
PR	PRESSURE RELIEF
PRG	PRESSURE RELIEF GRILLE
PRV	PRESSURE RELIEF VALVE
PSIG	POUNDS PER SQUARE INCH GAUGE
PSI	POUNDS PER SQUARE INCH
RA	RETURN AIR
RD	ROOF DRAIN
REG	REGISTER
REQ'D	REQUIRED
RF	RETURN FAN
RG	RETURN GRILLE
RL	REFRIGERANT LIQUID
RLA	RUNNING LOAD AMPERES
RPM	REVOLUTIONS PER MINUTE
RR	RETURN REGISTER
RS	REFRIGERANT SUCTION
RX	REMOVE EXISTING
S/D	SMOKE DAMPER
S/M	SHEET METAL
S/S	STAINLESS STEEL
SA	SUPPLY AIR
SD	SUPPLY DIFFUSER
SF	SUPPLY FAN OR SQUARE FEET
SG	SUPPLY GRILLE
SP	STATIC PRESSURE
SPD	STATIC PRESSURE DROP
SPEC	SPECIFICATION
SR	SUPPLY REGISTER
SST	SATURATED SUCTION TEMPERATURE
STL	STEEL
SQ	SQUARE
SW	STORM WATER PIPE
TEMP	TEMPERATURE
TG	TRANSFER GRILLE
TSP	TOTAL STATIC PRESSURE
TYP	TYPICAL
UON	UNLESS OTHERWISE NOTED
VTR	VENT THRU ROOF
W/	WITH
W/O	WITHOUT
WB	WET BULB
WC	WATER COLUMN

BUILDING DESIGN CRITERIA

INTERIOR:	SUMMER	76°F
	WINTER	70°F
EXTERIOR:	SUMMER	95°F DB/78°F WB
	WINTER	0°F
INTERIOR LOAD:	LIGHTING - 0.51 WATTS/SQ. FT. MISCELLANEOUS - 100 WATTS/COMPUTER	
VENTILATION LOAD:	PER ASHRAE STANDARD 62.1-2010	
PEOPLE DENSITY:	BASED ON ARCH FURNISHINGS	
EXISTING WALL "U" COEFFICIENT:	0.2 BTUH(SQ. FT.)(DEG. F)	
NEW/MODIFIED WALL "U" COEFFICIENT:	0.055 BTUH(SQ. FT.)(DEG. F)	
ROOF "U" COEFFICIENT:	0.033 BTUH(SQ. FT.)(DEG. F)	
GLASS TRANSMISSION COEFFICIENT:	0.31 BTUH(SQ. FT.)(DEG. F)	
GLASS SHADING COEFFICIENT:	0.38	

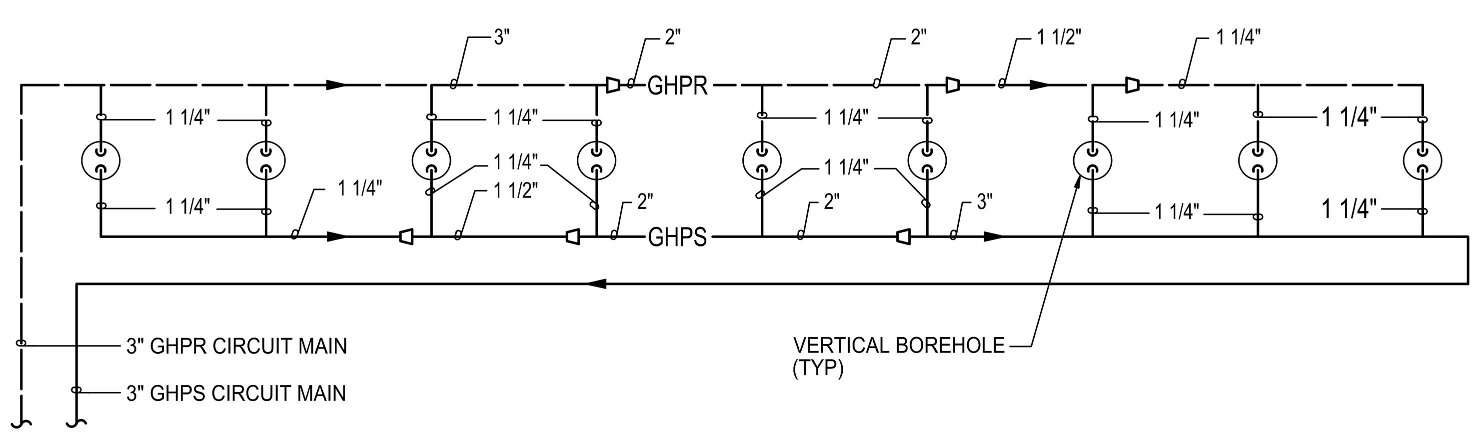

9 BOREHOLE BRANCH CIRCUIT
(TYPICAL 12 LOCATIONS - BALANCE EACH CIRCUIT MAIN TO 62.5± GPM TOTAL FLOW)

DETAIL 4 M-0.1
TYPICAL BOREHOLE CIRCUITS
NOT TO SCALE

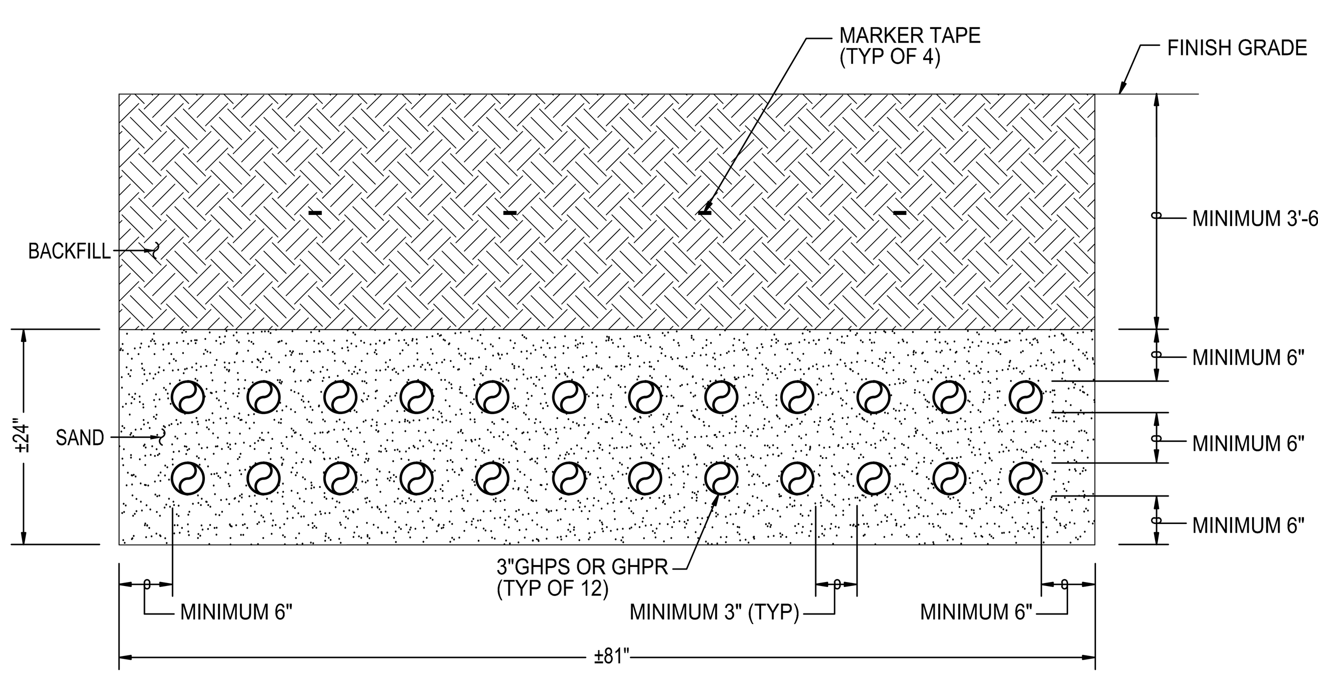

DETAIL 5 M-0.1
TYPICAL GHPS/GHPR CIRCUIT MAINS BELOW GRADE
NOT TO SCALE

James Posey Associates
Engineering Your Vision
Mechanical & Electrical Engineers
jamesposey.com
3112 Lord Baltimore Drive
Baltimore, MD 21244
tel 410-265-6100
fax 410-298-9820

Professional Certification. I hereby certify that these documents were prepared or approved by me, and that I am a duly licensed professional engineer under the laws of the state of Maryland, License No. 33686, Expiration date: 01-16-2017.

JPA PROJECT NO. 6542-15

GRIMM AND PARKER
11720 Beltsville Drive
Suite 600
Calverton, MD 20705
Tel: 301.595.1000
www.grimmandparker.com

GP #21541

MECHANICAL SYMBOLS AND ABBREVIATIONS, AND SITE DETAILS
LANSDOWNE ELEMENTARY SCHOOL
2301 ALMA ROAD, BALTIMORE, MD

DATE	DESCRIPTION

M-0.1
11/17/16
BID SET

© 2016 James Posey Associates, Inc.

November 10, 2016 6:38 a.m.

© GRIMM AND PARKER, P.C. 2014

GENERAL NOTES:

A. DO NOT LOCATE DUCTWORK OR PIPING ABOVE ELECTRICAL PANELS OR EQUIPMENT.

SPECIFIC NOTES:

1. 16"x10" EA UP TO EF-11 ON ROOF ABOVE (TRANSITION TO FULL SIZE UNIT CONNECTION IN VERTICAL).
2. 16"x6" EA UP TO EF-16 ON ROOF ABOVE (TRANSITION TO FULL SIZE UNIT CONNECTION IN VERTICAL).
3. 10"x8" EA UP TO EF-12 ON ROOF ABOVE (TRANSITION TO FULL SIZE UNIT CONNECTION IN VERTICAL).
4. 40"x28" DW SA UP TO RHPU-2 ON ROOF ABOVE.
5. 26"x14" DW RA UP TO RHPU-2 ON ROOF ABOVE.
6. 20"x8" EA UP TO EF-9 ON ROOF ABOVE (TRANSITION TO FULL SIZE UNIT CONNECTION IN VERTICAL).
7. 16"x8" EA UP TO EF-2 ON ROOF ABOVE (TRANSITION TO FULL SIZE UNIT CONNECTION IN VERTICAL).
8. 6"x10" EA UP TO EF-8 ON ROOF ABOVE (TRANSITION TO FULL SIZE UNIT CONNECTION IN VERTICAL).
9. **WCCU-1** SEE DIAGRAM 8/M-5.2
10. PROVIDE 2-INCH INSULATION IN DW DUCT.

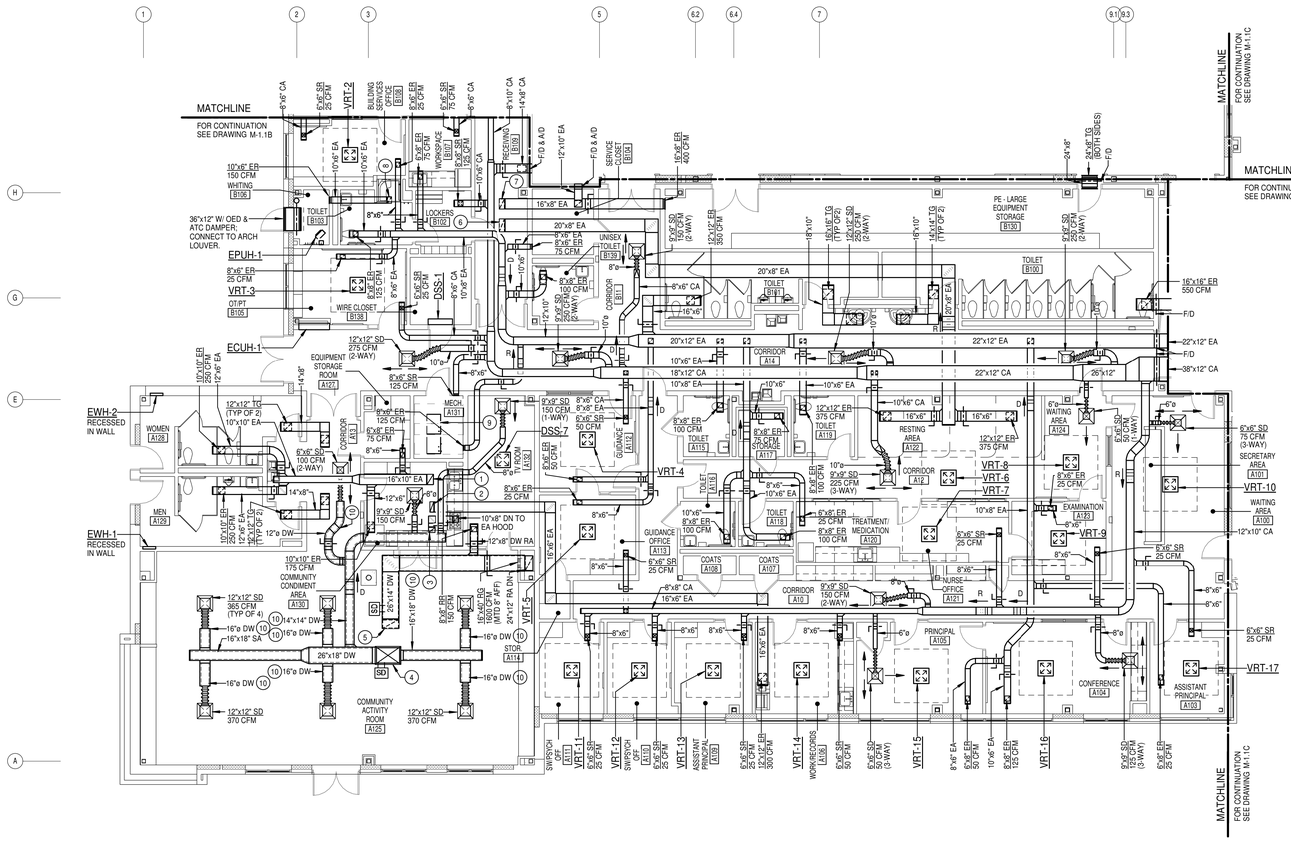

PARTIAL FIRST FLOOR PLAN - AREA A - HVAC

SCALE: 1/8" = 1'-0"

NORTH

8 4 0 8 16

SCALE: 1/8" = 1'-0"

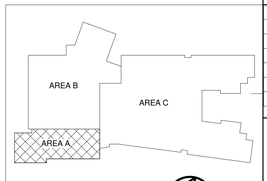

KEYPLAN NOT TO SCALE

NORTH

James Posey Associates
Engineering your vision
Mechanical & Electrical Engineers
jamesposey.com
3112 Lord Baltimore Drive
Baltimore, MD 21244
tel 410-265-6100
fax 410-298-9820

Professional Certification. I hereby certify that these documents were prepared or approved by me, and that I am a duly licensed professional engineer under the laws of the state of Maryland. License No. 33998. Expiration date: 01-16-2017.

JPA PROJECT NO. 6548-15

GRIMM AND PARKER
11720 Beltsville Drive
Suite 600
Calverton, MD 20705
Tel: 301.595.1000
www.grimmandparker.com

GP #21541

PARTIAL FIRST FLOOR PLAN - AREA A - HVAC

LANSDOWNE ELEMENTARY SCHOOL
2301 ALMA ROAD, BALTIMORE, MD

DATE	DESCRIPTION

M-1.1A

11/17/16
BID SET

© 2016 James Posey Associates, Inc.

© GRIMM AND PARKER, P.C. 2014

GENERAL NOTES:

A. DO NOT LOCATE DUCTWORK OR PIPING ABOVE ELECTRICAL PANELS OR EQUIPMENT.

SPECIFIC NOTES:

1. SEE PART PLAN 2/M-4.1 FOR CONTINUATION.
2. FULL SIZE SA AND RA UNIT CONNECTION UP TO RTU-2.

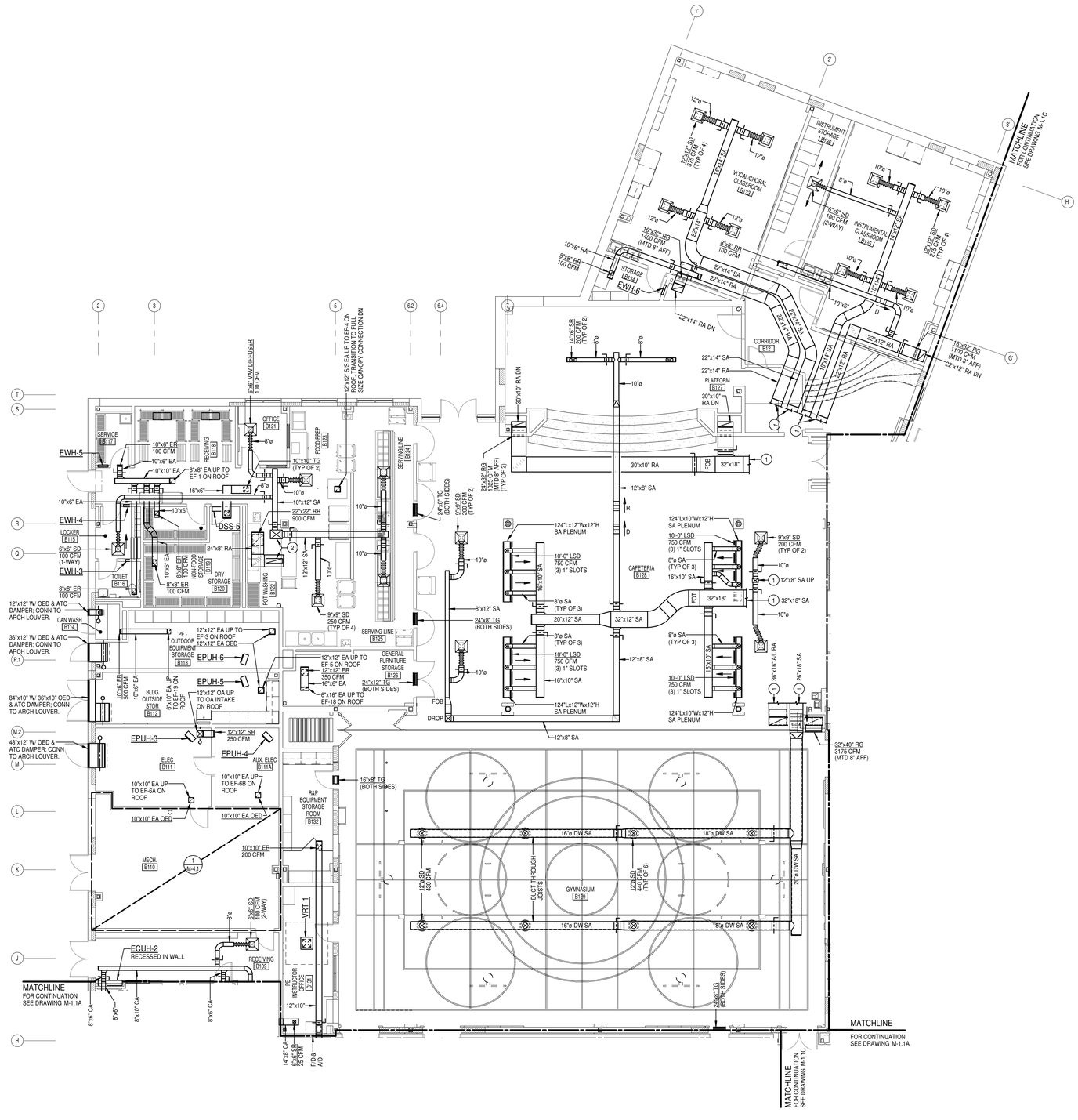

PARTIAL FIRST FLOOR PLAN - AREA B - HVAC

SCALE: 1/8" = 1'-0"

NORTH

8 4 0 8 16

SCALE: 1/8" = 1'-0"

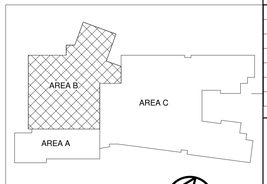

KEYPLAN
NOT TO SCALE

NORTH

James Posey Associates
Engineering your vision
Mechanical & Electrical Engineers
jamesposey.com
3112 Lord Baltimore Drive
Baltimore, MD 21244
tel 410-265-6100
fax 410-298-9820

Professional Certification.
I hereby certify that these documents were prepared or approved by me, and that I am a duly licensed professional engineer under the laws of the state of Maryland. License No. 33996. Expiration date: 01-16-2017.

JPA PROJECT NO. 6548-15

11720 Beltsville Drive
Suite 600
Calverton, MD 20705
Tel: 301.595.1000
www.grimmandparker.com
GRIMM AND PARKER

GP #21541

PARTIAL FIRST FLOOR PLAN - AREA B - HVAC

LANSDOWNE ELEMENTARY SCHOOL
2301 ALMA ROAD, BALTIMORE, MD

DATE	DESCRIPTION

M-1.1B

11/17/16
BID SET

© 2016 James Posey Associates, Inc.

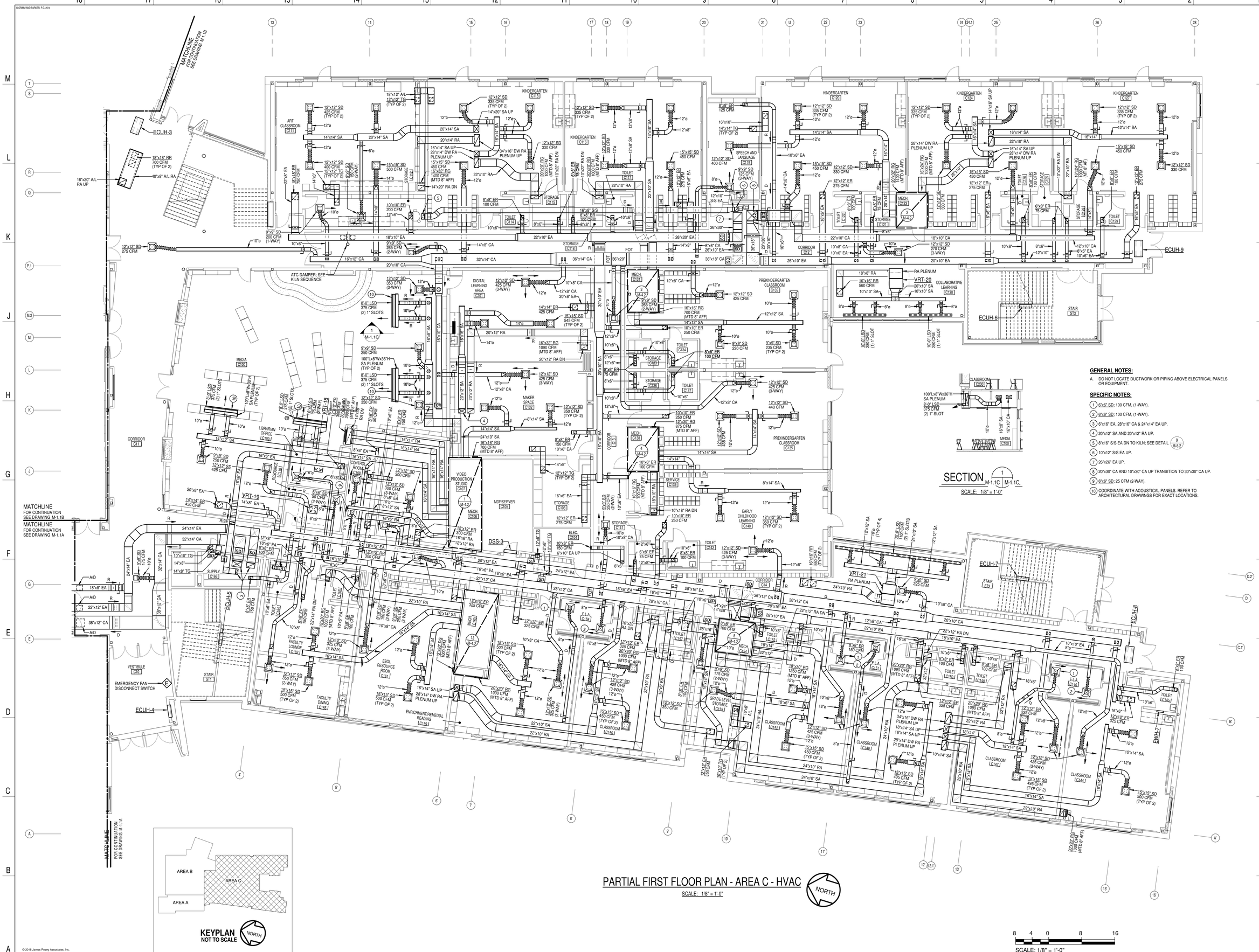

PARTIAL FIRST FLOOR PLAN - AREA C - HVAC

SCALE: 1/8" = 1'-0"

SECTION 1 / M-1.1C / M-1.1C

SCALE: 1/8" = 1'-0"

GENERAL NOTES:

A. DO NOT LOCATE DUCTWORK OR PIPING ABOVE ELECTRICAL PANELS OR EQUIPMENT.

SPECIFIC NOTES:

1. 6"x6" SD; 100 CFM, (1-WAY).
2. 6"x6" SD; 100 CFM, (1-WAY).
3. 6"x16" EA, 28"x16" CA & 24"x14" EA UP.
4. 20"x12" SA AND 20"x12" RA UP.
5. 8"x16" S/S EA DN TO KILN; SEE DETAIL 9 / M-5.2
6. 10"x12" S/S EA UP.
7. 26"x26" EA UP.
8. 20"x30" CA AND 10"x30" CA UP TRANSITION TO 30"x30" CA UP.
9. 6"x6" SD; 25 CFM (2-WAY).
10. COORDINATE WITH ACOUSTICAL PANELS. REFER TO ARCHITECTURAL DRAWINGS FOR EXACT LOCATIONS.

SCALE: 1/8" = 1'-0"

© GRIMM AND PARKER, P.C. 2014

© 2016 James Posey Associates, Inc.

James Posey Associates
Engineering your vision
Mechanical & Electrical Engineers
jamesposey.com
3112 Lord Baltimore Drive
Baltimore, MD 21244
tel 410-265-6100
fax 410-298-9820

Professional Certification. I hereby certify that these documents were prepared or approved by me, and that I am a duly licensed professional engineer under the laws of the state of Maryland. License number 36966. Expiration date: 01-16-2017.

JPA PROJECT NO. 6545-15

GRIMM AND PARKER
11720 Beltsville Drive
Suite 600
Calverton, MD 20705
Tel: 301.595.1000
www.grimmandparker.com

GP #21541

PARTIAL FIRST FLOOR PLAN - AREA C - HVAC

LANSDOWNE ELEMENTARY SCHOOL
2301 ALMA ROAD, BALTIMORE, MD

DATE	DESCRIPTION
10/7/16	ADD NO.1

M-1.1C

11/17/16
BID SET

© GRIMM AND PARKER, P.C. 2014

PARTIAL SECOND FLOOR PLAN - AREA C - HVAC

SCALE: 1/8" = 1'-0"

SCALE: 1/8" = 1'-0"

GENERAL NOTES:

A. DO NOT LOCATE DUCTWORK OR PIPING ABOVE ELECTRICAL PANELS OR EQUIPMENT.

SPECIFIC NOTES:

1. 30"x30" CA DN AND UP TO DOAS-1 ON ROOF ABOVE.
2. 20"x36" DW CA AND 16"x24" DW CA UP TO DOAS-1 ON ROOF ABOVE.
3. 28"x26" EA DN AND UP TO DOAS-1 ON ROOF ABOVE.
4. 20"x36" DW EA AND 18"x24" DW EA UP TO DOAS-1 ON ROOF ABOVE.
5. 12"x10" S/S EA UP TO EF-13 ON ROOF ABOVE.
6. 6"x6" SD: 100 CFM, (1-WAY).
7. 6"x6" SD: 100 CFM, (1-WAY).
8. 20"x12" SA AND 20"x12" RA DN.
9. 16"x6" EA UP TO EF-14 ON ROOF ABOVE.
10. 24"x14" EA DN AND UP TO DOAS-3.
11. 30"x14" CA DN (OFFSET IN VERTICAL) AND UP TO DOAS-3.
12. 26"x28" CA DN AND UP TO DOAS-2 ON ROOF ABOVE.
13. 24"x24" EA DN AND UP TO DOAS-2 ON ROOF ABOVE.
14. 20"x34" DW CA AND 18"x30" DW CA UP TO DOAS-2 ON ROOF ABOVE.
15. 20"x36" DW EA AND 18"x24" DW EA UP TO DOAS-2 ON ROOF ABOVE.
16. 12"x10" S/S EA DN.

© 2016 James Posey Associates, Inc.

James Posey Associates
Engineering your vision
Mechanical & Electrical Engineers
jamesposey.com
3112 Lord Baltimore Drive
Baltimore, MD 21244
tel 410-265-6100
fax 410-298-9820

Professional Certification. I hereby certify that these documents were prepared or approved by me, and that I am a duly licensed professional engineer under the laws of the state of Maryland. License No. 36666, Expiration date: 01-16-2017.

JPA PROJECT NO. 6548-15

GRIMM AND PARKER
11720 Beltsville Drive
Suite 600
Calverton, MD 20705
Tel: 301.595.1000
www.grimmandparker.com

GP #21541

PARTIAL SECOND FLOOR PLAN - AREA C - HVAC

LANSDOWNE ELEMENTARY SCHOOL
2301 ALMA ROAD, BALTIMORE, MD

DATE	DESCRIPTION

M-1.2C

11/17/16
BID SET

© GRIMM AND PARKER, P.C. 2014

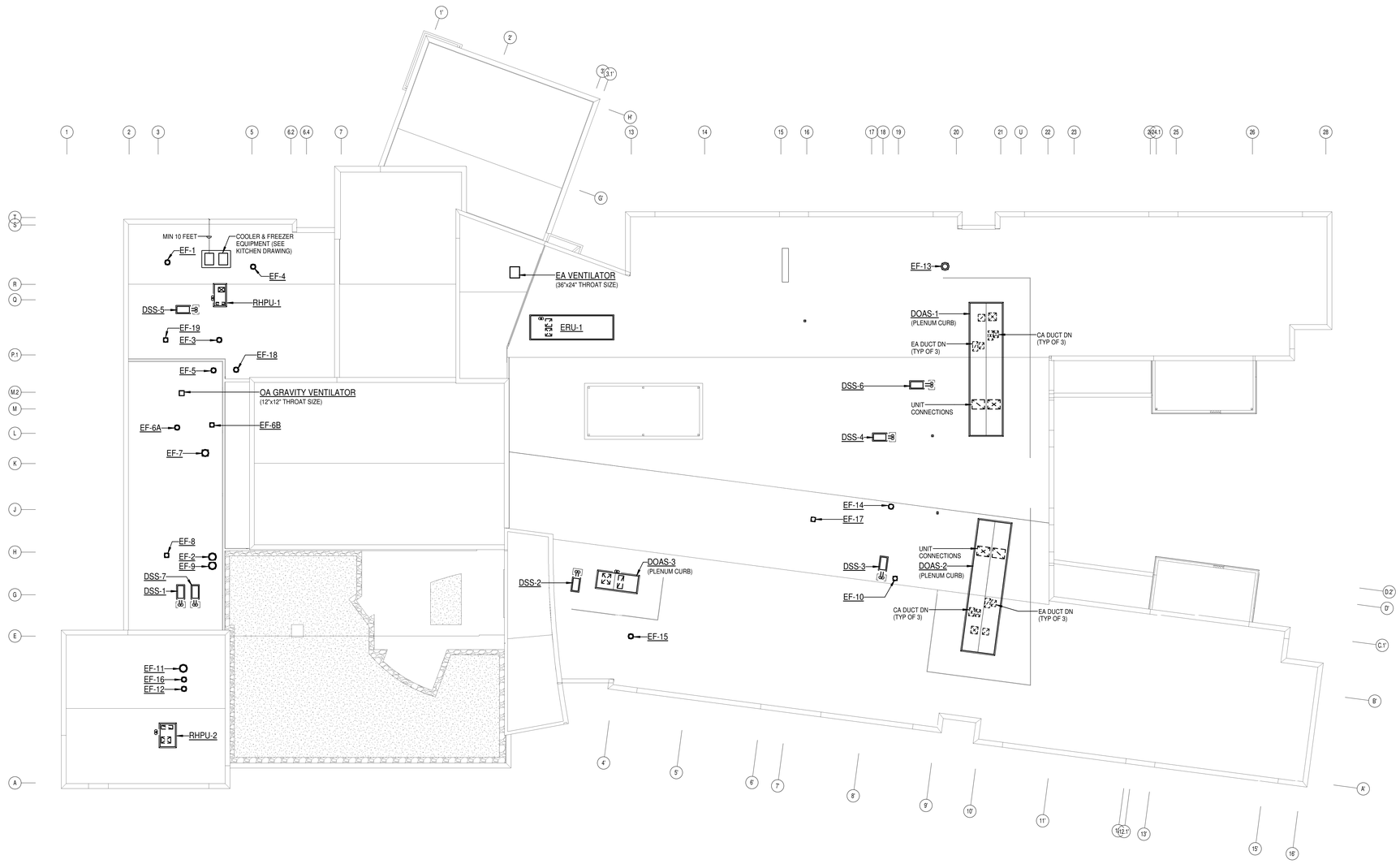

ROOF PLAN - HVAC

SCALE: 1/16" = 1'-0"

NORTH

MAINTAIN MINIMUM 10'-0" CLEARANCE BETWEEN EXHAUST FANS AND OUTDOOR AIR INTAKES.

16 8 0 16 32

SCALE: 1/16" = 1'-0"

© 2016 James Posey Associates, Inc.

James Posey Associates
Engineering your vision
Mechanical & Electrical Engineers
jamesposey.com
3112 Lord Baltimore Drive
Baltimore, MD 21244
tel 410-265-6100
fax 410-298-9820

Professional Certification. I hereby certify that these documents were prepared or approved by me, and that I am a duly licensed professional engineer under the laws of the state of Maryland. License No. 33996. Expiration date: 01-16-2017.

STATE OF MARYLAND * MICHAEL SIERREN * 33996 * PROFESSIONAL ENGINEER

JPA PROJECT NO. 6545-15

11720 Beltsville Drive
Suite 600
Calverton, MD 20705
Tel: 301.595.1000
www.grimmandparker.com
GRIMM AND PARKER

GP #21541

ROOF PLAN - HVAC

LANSDOWNE ELEMENTARY SCHOOL
2301 ALMA ROAD, BALTIMORE, MD

DATE	DESCRIPTION

M-1.3

11/17/16
BID SET

© GRIMM AND PARKER, P.C. 2014

GENERAL NOTES:

A. DO NOT LOCATE DUCTWORK OR PIPING ABOVE ELECTRICAL PANELS OR EQUIPMENT.

SPECIFIC NOTES:

1. REFRIGERANT PIPING, SIZE, LOCATION, AND QUANTITY PER MANUFACTURER'S RECOMMENDATIONS.
2. VARIABLE REFRIGERANT FLOW SYSTEM BRANCH SELECTOR UNIT.

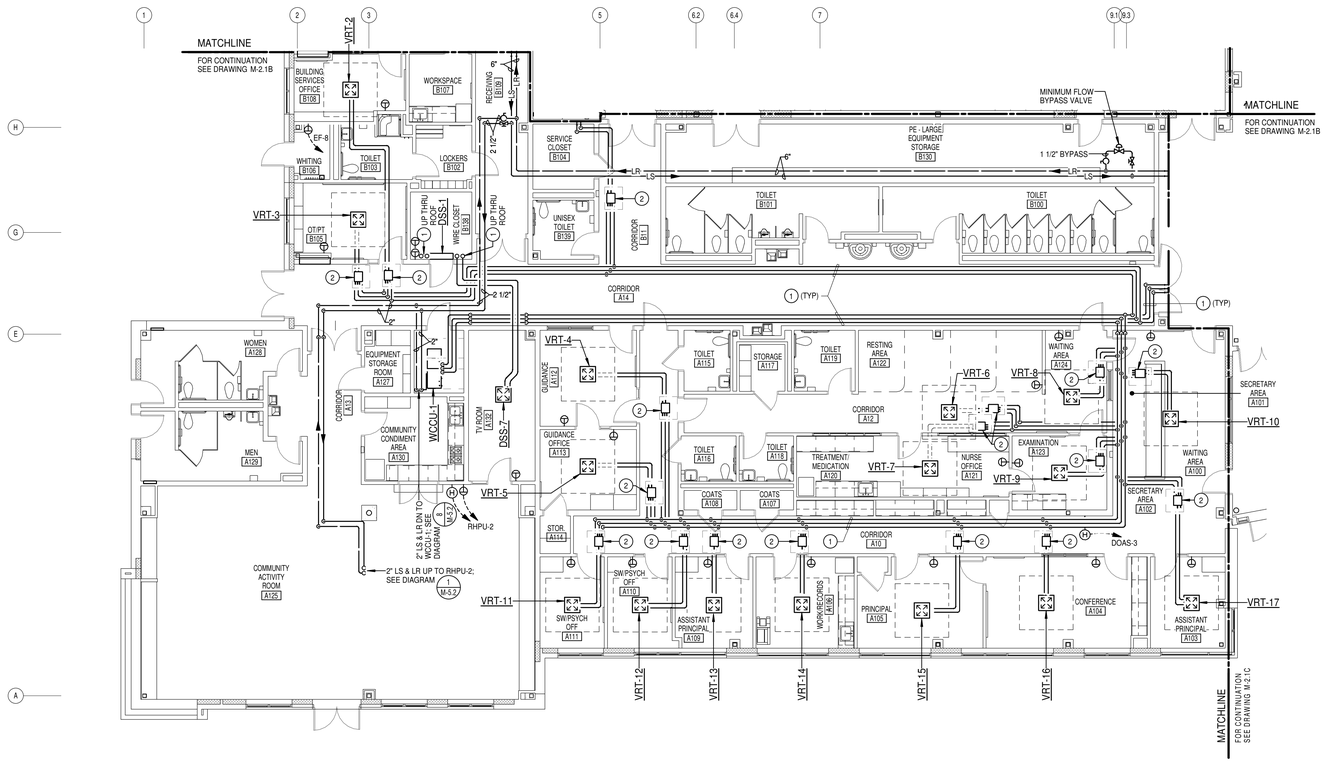

PARTIAL FIRST FLOOR PLAN - AREA A - PIPING

SCALE: 1/8" = 1'-0"

NORTH

8 4 0 8 16

SCALE: 1/8" = 1'-0"

KEYPLAN
NOT TO SCALE

NORTH

© 2016 James Posey Associates, Inc.

James Posey Associates
Engineering your vision
Mechanical & Electrical Engineers
jamesposey.com
3112 Lord Baltimore Drive
Baltimore, MD 21244
tel 410-265-6100
fax 410-298-9820

Professional Certification. I hereby certify that these documents were prepared or approved by me, and that I am a duly licensed professional engineer under the laws of the state of Maryland. License No. 33996. Expiration date: 01-16-2017.

STATE OF MARYLAND MICHAEL P. SIERREN 33996 PROFESSIONAL ENGINEER

JPA PROJECT NO. 6548-15

11720 Beltsville Drive
Suite 600
Calverton, MD 20705
Tel: 301.595.1000
www.grimmandparker.com
G+P
GRIMM AND PARKER

GP #21541

PARTIAL FIRST FLOOR PLAN - AREA A - PIPING

LANSDOWNE ELEMENTARY SCHOOL
2301 ALMA ROAD, BALTIMORE, MD

DATE	DESCRIPTION

M-2.1A

11/17/16
BID SET

© GRIMM AND PARKER, P.C. 2014

GENERAL NOTES:

A. DO NOT LOCATE DUCTWORK OR PIPING ABOVE ELECTRICAL PANELS OR EQUIPMENT.

SPECIFIC NOTES:

1. REFRIGERANT PIPING, SIZE, LOCATION, AND QUANTITY PER MANUFACTURER'S RECOMMENDATIONS.
2. DRAIN PAN. SEE DRAWING P-4.1.

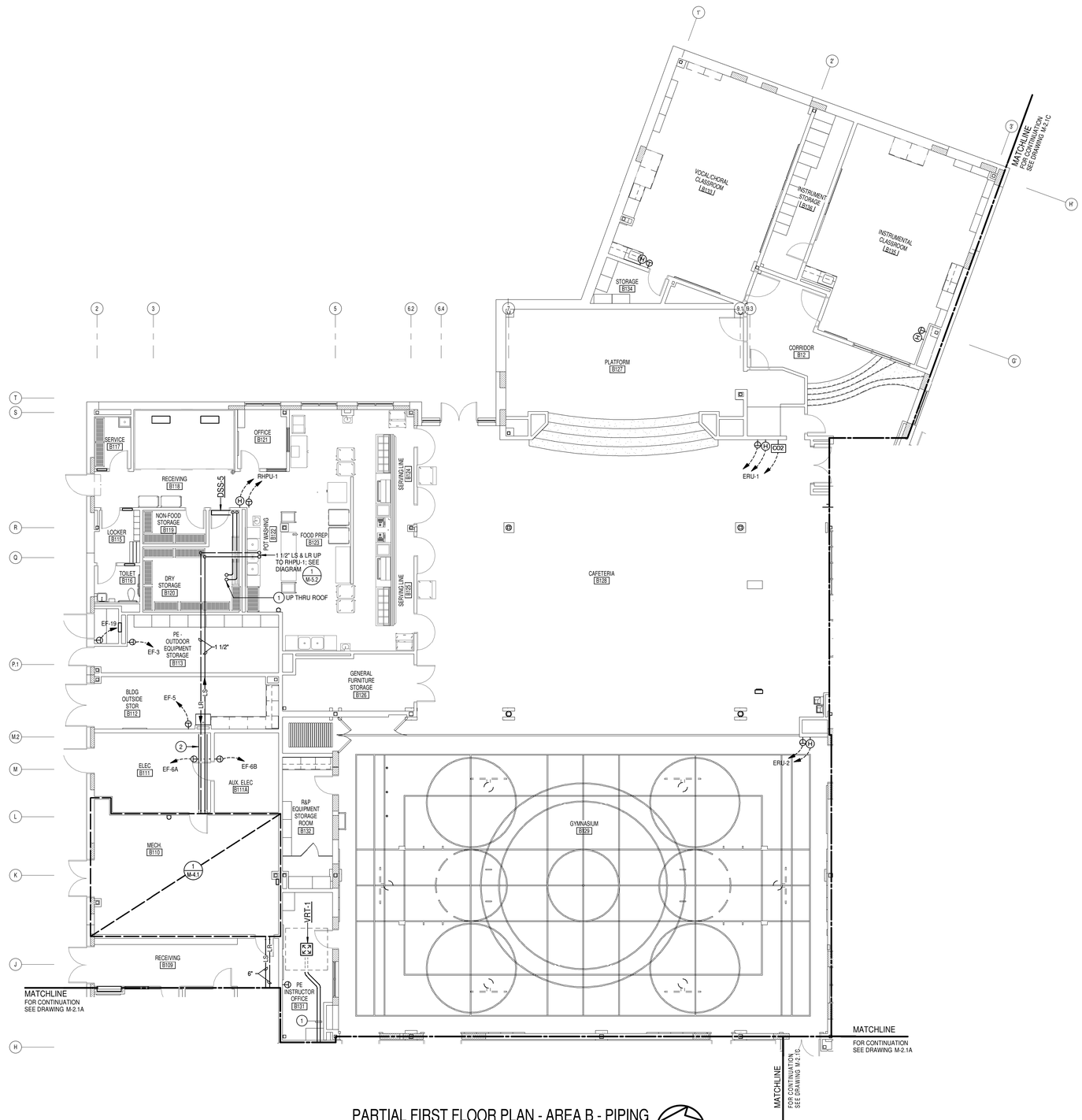

PARTIAL FIRST FLOOR PLAN - AREA B - PIPING

SCALE: 1/8" = 1'-0"

NORTH

8 4 0 8 16

SCALE: 1/8" = 1'-0"

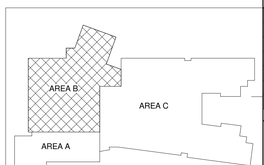

KEYPLAN
NOT TO SCALE

NORTH

James Posey Associates
Engineering your vision
3112 Lord Baltimore Drive
Baltimore, MD 21244
tel 410-265-6100
fax 410-298-9820
Mechanical & Electrical Engineers
jamesposey.com

Professional Certification. I hereby certify that these documents were prepared or approved by me, and that I am a duly licensed professional engineer under the laws of the state of Maryland. License No. 33998. Expiration date: 01-16-2017.

STATE OF MARYLAND MICHAEL J. SIERREN 33998 PROFESSIONAL ENGINEER

JPA PROJECT NO. 6548-15

11720 Beltsville Drive
Suite 600
Calverton, MD 20705
Tel: 301.595.1000
www.grimmandparker.com
GRIMM AND PARKER

GP #21541

PARTIAL FIRST FLOOR PLAN - AREA B - PIPING

LANSDOWNE ELEMENTARY SCHOOL
2301 ALMA ROAD, BALTIMORE, MD

DATE	DESCRIPTION

M-2.1B

11/17/16
BID SET

© 2016 James Posey Associates, Inc.

© GRIMM AND PARKER, P.C. 2014

GENERAL NOTES:

A. DO NOT LOCATE DUCTWORK OR PIPING ABOVE ELECTRICAL PANELS OR EQUIPMENT.

SPECIFIC NOTES:

1. REFRIGERANT PIPING, SIZE, LOCATION, AND QUANTITY PER MANUFACTURER'S RECOMMENDATIONS.
2. VARIABLE REFRIGERANT FLOW SYSTEM BRANCH SELECTOR UNIT.

PARTIAL FIRST FLOOR PLAN - AREA C - PIPING

SCALE: 1/8" = 1'-0"

© 2016 James Posey Associates, Inc.

James Posey Associates
Engineering your vision
Mechanical & Electrical Engineers
jamesposey.com
3112 Lord Baltimore Drive
Baltimore, MD 21244
tel 410-265-6100
fax 410-298-9820

Professional Certification. I hereby certify that these documents were prepared or approved by me, and that I am a duly licensed professional engineer under the laws of the state of Maryland. License number 33995. Expiration date: 01-16-2017.

STATE OF MARYLAND MICHAEL J. SIERREN LICENSED PROFESSIONAL ENGINEER 33995

JPA PROJECT NO. 6546-15

GRIMM AND PARKER
11720 Beltsville Drive
Suite 600
Calverton, MD 20705
Tel: 301.595.1000
www.grimmandparker.com

GP #21541

PARTIAL FIRST FLOOR PLAN - AREA C - PIPING

LANSDOWNE ELEMENTARY SCHOOL
2301 ALMA ROAD, BALTIMORE, MD

DATE	DESCRIPTION

M-2.1C

11/17/16
BID SET

© GRIMM AND PARKER, P.C. 2014

PARTIAL SECOND FLOOR PLAN - AREA C - PIPING

SCALE: 1/8" = 1'-0"

GENERAL NOTES:

A. DO NOT LOCATE DUCTWORK OR PIPING ABOVE ELECTRICAL PANELS OR EQUIPMENT.

SPECIFIC NOTES:

1. REFRIGERANT PIPING, SIZE, LOCATION, AND QUANTITY PER MANUFACTURER'S RECOMMENDATIONS.
2. VARIABLE REFRIGERANT FLOW SYSTEM BRANCH SELECTOR UNIT.

8 4 0 8 16
SCALE: 1/8" = 1'-0"

© 2016 James Posey Associates, Inc.

James Posey Associates
Engineering your vision
Mechanical & Electrical Engineers
jamesposey.com
3112 Lord Baltimore Drive
Baltimore, MD 21244
tel 410-265-6100
fax 410-298-9820

Professional Certification.
I hereby certify that these documents were prepared or approved by me, and that I am a duly licensed professional engineer under the laws of the state of Maryland. License No. 33986, Expiration date: 01-16-2017.

STATE OF MARYLAND · MICHAEL J. SIERREN · 33986 · PROFESSIONAL ENGINEER

JPA PROJECT NO. 6542-15

11720 Beltsville Drive
Suite 600
Calverton, MD 20705
Tel: 301.595.1000
www.grimmandparker.com
GRIMM AND PARKER

GP #21541

PARTIAL SECOND FLOOR PLAN - AREA C - PIPING

LANSDOWNE ELEMENTARY SCHOOL
2301 ALMA ROAD, BALTIMORE, MD

DATE	DESCRIPTION

M-2.2C

11/17/16
BID SET

© GRIMM AND PARKER, P.C. 2014

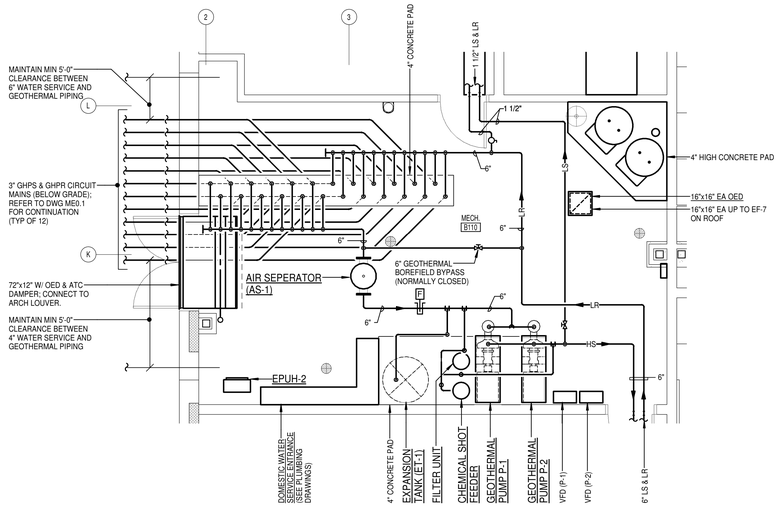

1 M-4.1 PART PLAN - MECHANICAL ROOM B110

SCALE: 1/4" = 1'-0"

NORTH

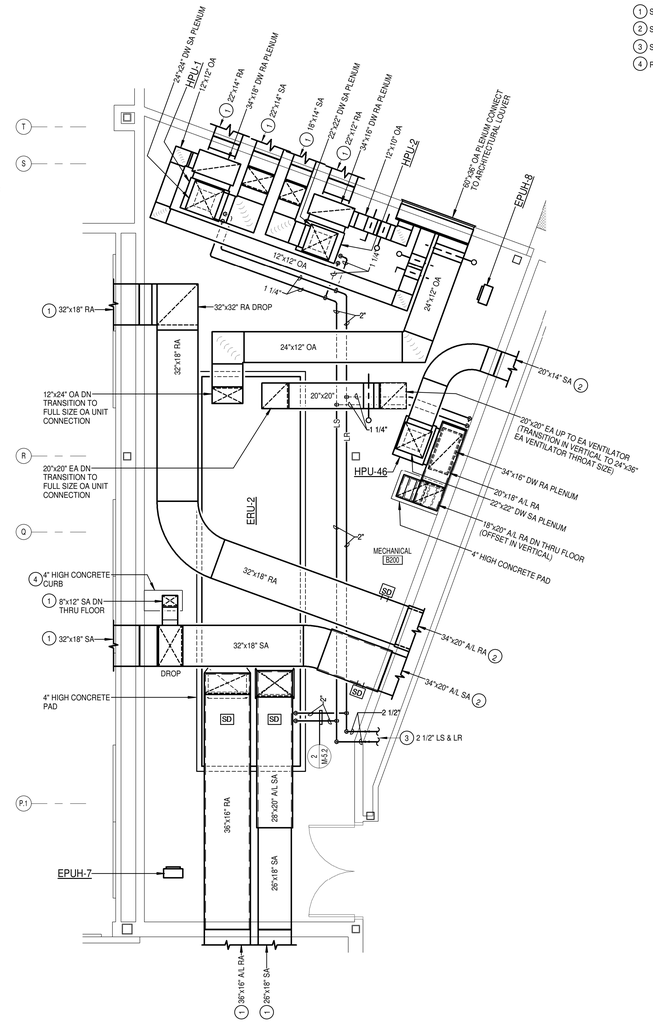

2 M-4.1 PART PLAN - MECHANICAL ROOM B200

SCALE: 1/4" = 1'-0"

NORTH

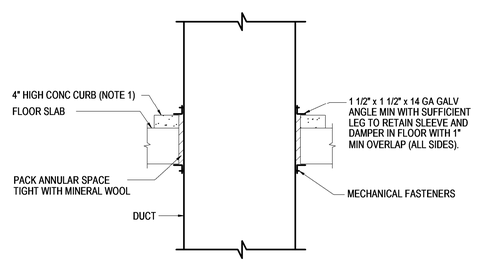

NOTES:

1. PROVIDE CONCRETE CURB WITHIN MECHANICAL ROOMS AND MECHANICAL CLOSET.

DETAIL 1 M-4.1

DUCT PENETRATION THROUGH FLOOR SLAB WITHOUT FIRE DAMPER

NOT TO SCALE

GENERAL NOTES:

A. DO NOT LOCATE DUCTWORK OR PIPING ABOVE ELECTRICAL PANELS OR EQUIPMENT.

SPECIFIC NOTES:

1. SEE DRAWING M-1.1B FOR CONTINUATION.
2. SEE DRAWING M-1.2C FOR CONTINUATION.
3. SEE DRAWING M-2.2C FOR CONTINUATION.
4. REFER TO 1 M-4.1

4 2 0 4 8

SCALE: 1/4" = 1'-0"

KEYPLAN
NOT TO SCALE

NORTH

James Posey Associates
Engineering your vision
Mechanical & Electrical Engineers
jamesposey.com
3112 Lord Baltimore Drive
Baltimore, MD 21244
tel 410-265-6100
fax 410-298-9820

Professional Certification. I hereby certify that these documents were prepared or approved by me, and that I am a duly licensed professional engineer under the laws of the state of Maryland. License No. 33998. Expiration date: 01-16-2017.

JPA PROJECT NO. 6549-15

11720 Beltsville Drive
Suite 600
Calverton, MD 20705
Tel: 301.595.1000
www.grimmandparker.com
GRIMM AND PARKER

GP #21541

PART PLANS - HVAC

LANSDOWNE ELEMENTARY SCHOOL
2301 ALMA ROAD, BALTIMORE, MD

DATE	DESCRIPTION
10/7/16	ADD NO.1

M-4.1

11/17/16
BID SET

© 2016 James Posey Associates, Inc.

© GRIMM AND PARKER, P.C. 2014

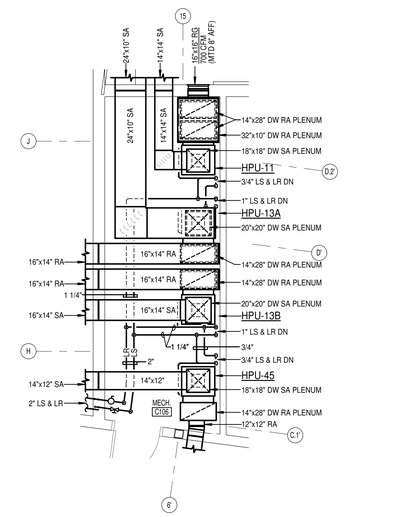

1 M-4.2 PART PLAN - MECHANICAL CLOSET C106
SCALE: 1/4" = 1'-0"

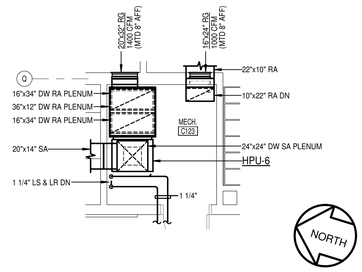

2 M-4.2 PART PLAN - MECHANICAL CLOSET C123
SCALE: 1/4" = 1'-0"

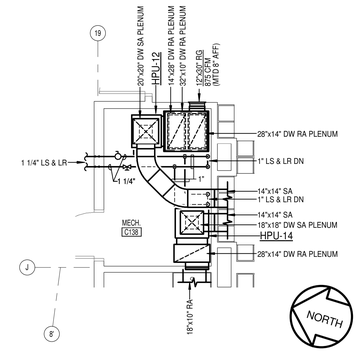

4 M-4.2 PART PLAN - MECHANICAL CLOSET C138
SCALE: 1/4" = 1'-0"

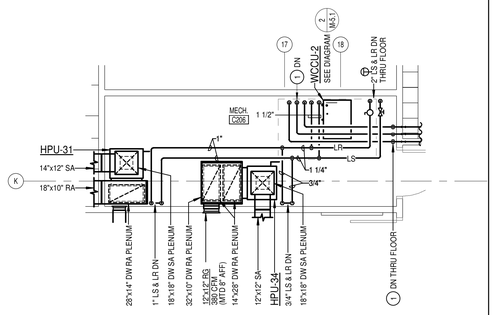

6 M-4.2 PART PLAN - MECHANICAL CLOSET C206
SCALE: 1/4" = 1'-0"

GENERAL NOTES:

A. CONTRACTOR SHALL INSTALL ALL EQUIPMENT, DEVICES, DUCTWORK, CONTROLS, ETC IN ONE (6) HEAT PUMP UNIT MECHANICAL CLOSET SELECTED BY THE ARCHITECT FOR MOCK-UP PRIOR TO INSTALLATION OF OTHER HPUS. CONTRACTOR SHALL OBTAIN APPROVAL FROM ARCHITECT BEFORE CONTINUING WITH INSTALLATION OF HEAT PUMPS IN OTHER LOCATIONS.

B. CONTRACTOR SHALL MAINTAIN MIN 3'-0" SERVICE CORRIDOR BETWEEN HEAT PUMP UNITS.

C. CONTRACTOR SHALL MAINTAIN REQUIRED CLEARANCES AT ALL DISCONNECTS AND WALL-MOUNTED ELECTRICAL DEVICES AS PER NEC.

D. COORDINATE EXACT LOCATION OF DDC PANEL WITH OTHER ROOM DEVICES PRIOR TO INSTALLATION.

E. DO NOT LOCATE PIPING OR CONDUIT RISER, DUCT RISER OR ANY DEVICES UNRELATED TO HEAT PUMP UNITS IN MECAHNICAL CLOSETS.

F. INSTALL HEAT PUMP UNITS TO MAINTAIN FULL ACCESS TO FRONT AND SIDE OF THE UNIT AS INDICATED ON PART PLANS.

G. ALL VALVES TO BE LOCATED MAXIMUM 7'-0" ABOVE FLOOR.

H. FOR ADDITIONAL REQUIREMENTS SEE DETAIL 3 / M-5.2

I. SEE PLUMBING DRAWINGS FOR PLUMBING REQUIREMENTS.

J. PROVIDE ONE-INCH LINING THICKNESS FOR ALL DOUBLE-WALL DUCTWORK CONSTRUCTION UNLESS OTHERWISE NOTED ON PLAN.

SPECIFIC NOTES:

1. REFRIGERANT PIPING, SIZE, LOCATION, AND QUANTITY PER MANUFACTURER'S RECOMMENDATIONS.
2. REFER TO DETAIL 1 / M-4.1

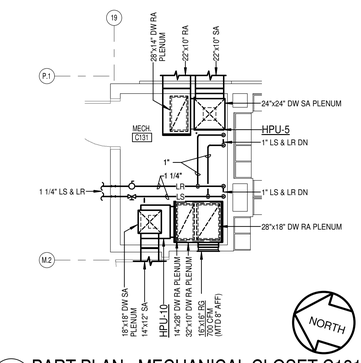

3 M-4.2 PART PLAN - MECHANICAL CLOSET C131
SCALE: 1/4" = 1'-0"

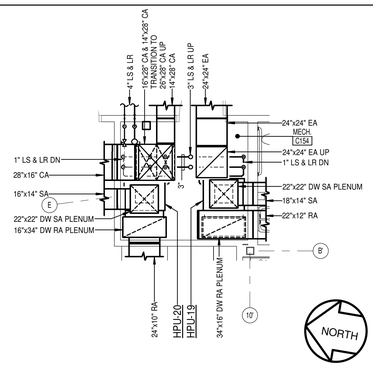

5 M-4.2 PART PLAN - MECHANICAL CLOSET C154
SCALE: 1/4" = 1'-0"

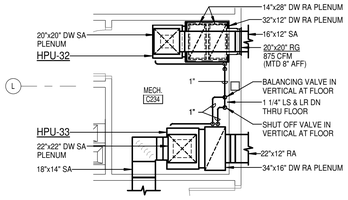

7 M-4.2 PART PLAN - MECHANICAL CLOSET C234
SCALE: 1/4" = 1'-0"

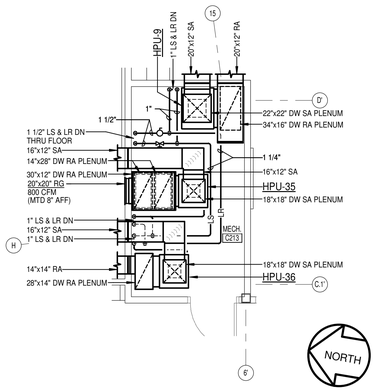

8 M-4.2 PART PLAN - MECHANICAL CLOSET C213
SCALE: 1/4" = 1'-0"

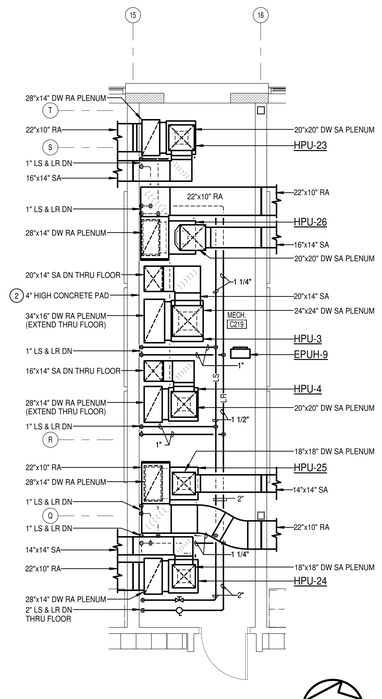

9 M-4.2 PART PLAN - MECHANICAL CLOSET C219
SCALE: 1/4" = 1'-0"

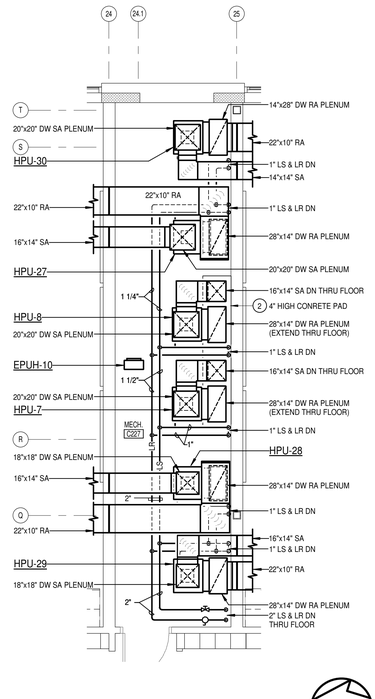

10 M-4.2 PART PLAN - MECHANICAL CLOSET C227
SCALE: 1/4" = 1'-0"

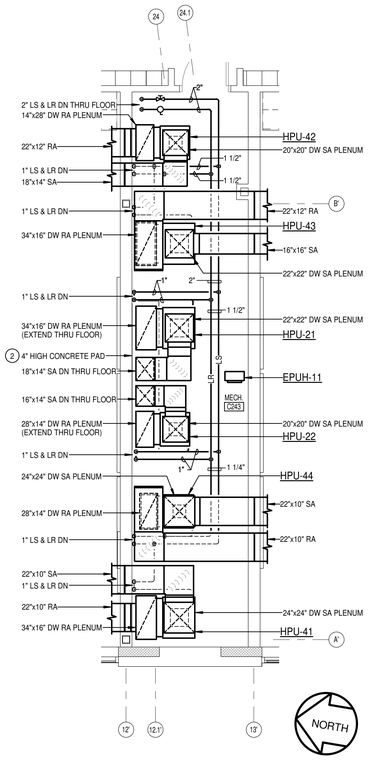

11 M-4.2 PART PLAN - MECHANICAL CLOSET C243
SCALE: 1/4" = 1'-0"

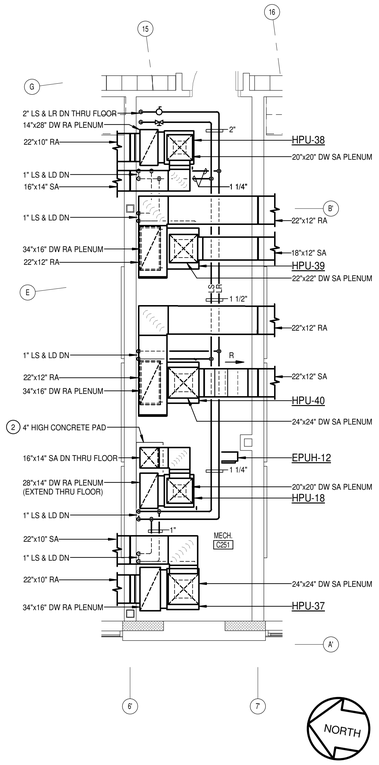

12 M-4.2 PART PLAN - MECHANICAL CLOSET C251
SCALE: 1/4" = 1'-0"

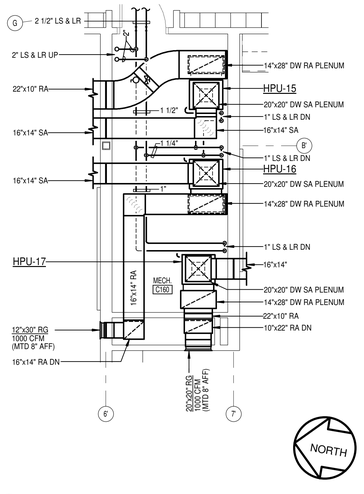

13 M-4.2 PART PLAN - MECHANICAL CLOSET C160
SCALE: 1/4" = 1'-0"

SCALE: 1/4" = 1'-0"

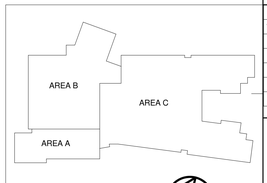

KEYPLAN
NOT TO SCALE

James Posey Associates
Engineering your vision
Mechanical & Electrical Engineers
jamesposey.com
3112 Lord Baltimore Drive
Baltimore, MD 21244
tel 410-265-6100
fax 410-298-9820

Professional Certification. I hereby certify that these documents were prepared or approved by me, and that I am a duly Licensed Professional Engineer under the laws of the state of Maryland. License No. 35866. Expiration date: 01-16-2017.

JPA PROJECT NO. 6549-15

11720 Beltsville Drive
Suite 600
Calverton, MD 20705
Tel: 301.595.1000
www.grimmandparker.com
GRIMM AND PARKER
GP #21541

PART PLANS - HVAC

LANSDOWNE ELEMENTARY SCHOOL
2301 ALMA ROAD, BALTIMORE, MD

DATE	DESCRIPTION
10/7/16	ADD NO.1

M-4.2
11/17/16
BID SET

© 2016 James Posey Associates, Inc.

© GRIMM AND PARKER, P.C. 2014

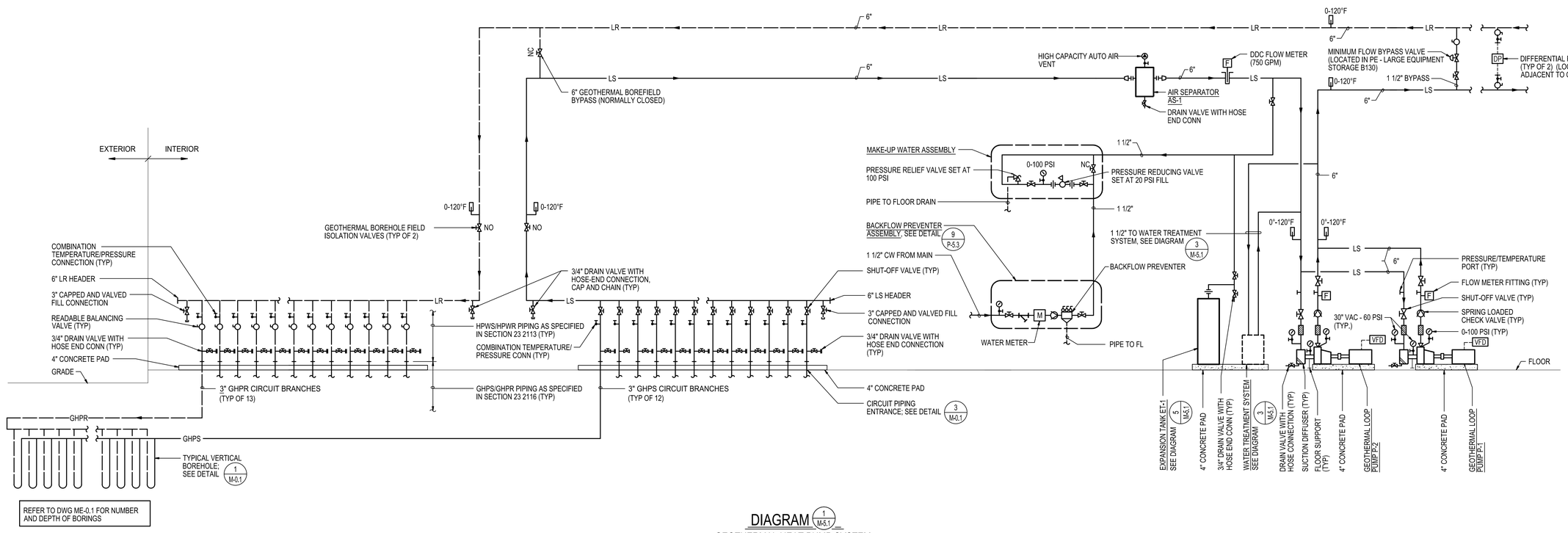

DIAGRAM 1/M-5.1
GEOTHERMAL HEAT PUMP SYSTEM
NOT TO SCALE

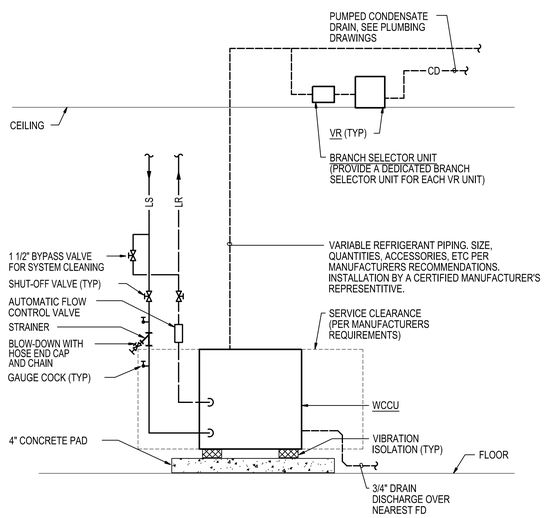

DIAGRAM 2/M-5.1
PIPING CONNECTIONS TO WATER COOLED CONDENSING UNIT FOR VARIABLE REFRIGERANT FLOW SYSTEM (WCCU-2)
NOT TO SCALE

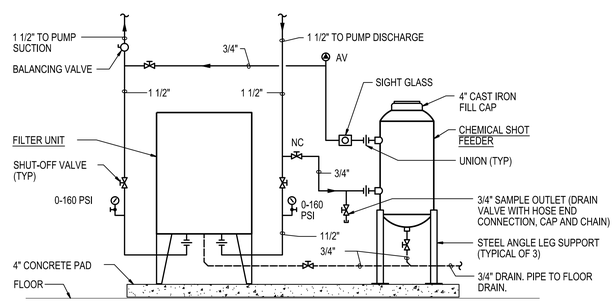

NOTES:

1. CONNECT 1 1/2" PIPING TO BOTTOM OF PUMP SUCTION AND DISCHARGE MAINS. INSTALL WELDED THREAD-O-LET, DIELECTRIC NIPPLES AND BALL VALVE AT CONNECTION TO MAINS.
2. ALL PIPING SHALL BE COPPER TYPE "L".
3. ALL VALVES SHALL BE FULL PORT BALL VALES.
4. CHEMICAL SHOT FEEDER EQUAL TO NEPTUNE MODEL DBF-5HP.
5. FILTER UNIT EQUAL TO HARMSCO MODEL HIF-7-SS.

DIAGRAM 3/M-5.1
WATER TREATMENT SYSTEM
NOT TO SCALE

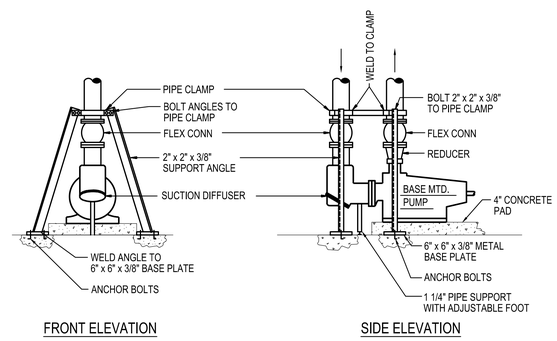

FRONT ELEVATION SIDE ELEVATION

DETAIL 4/M-5.1
PIPE SUPPORTS FOR BASE MOUNTED PUMPS
NOT TO SCALE

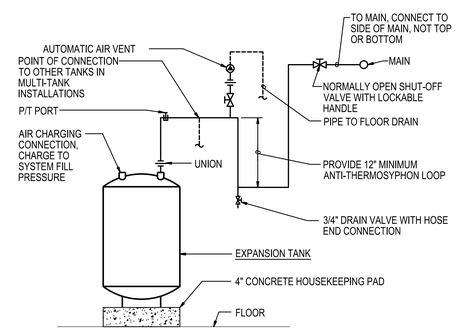

NOTES: FOR HEATING ONLY SYSTEMS, DO NOT INSULATE TANK OR PIPING BETWEEN EXPANSION TANK AND MAIN.

SIZE PIPING BETWEEN EXPANSION TANK AND MAIN PER THE TANK MANUFACTURER'S RECOMMENDATIONS, BUT NOT LESS THAN THE EXPANSION TANK CONNECTION SIZE OR SIZES INDICATED ON OTHER PLANS AND DIAGRAMS.

DIAGRAM 5/M-5.1
FLOOR MOUNTED EXPANSION TANK
NOT TO SCALE

James Posey Associates
Engineering Your Vision
Mechanical & Electrical Engineers
jamesposey.com
3112 Lord Baltimore Drive
Baltimore, MD 21244
tel 410-265-6100
fax 410-298-9820

Professional Certification. I hereby certify that these documents were prepared or approved by me, and that I am a duly licensed professional engineer under the laws of the state of Maryland, License No. 33986. Expiration date: 01-16-2017.

JPA PROJECT NO. 6542-15

11720 Beltsville Drive
Suite 600
Calverton, MD 20705
Tel: 301.595.1000
www.grimmandparker.com
G+P GRIMM AND PARKER

GP #21541

DETAILS AND DIAGRAMS

LANSDOWNE ELEMENTARY SCHOOL
2301 ALMA ROAD, BALTIMORE, MD

DATE	DESCRIPTION
10/7/16	ADD NO. 1

M-5.1
11/17/16
BID SET

November 10, 2016 6:38 p.m.
Drawing: S:\6542-15\B-DRAWINGS\6542M51.DWG M2NOVAWEC

© 2016 James Posey Associates, Inc.

© GRIMM AND PARKER, P.C. 2014

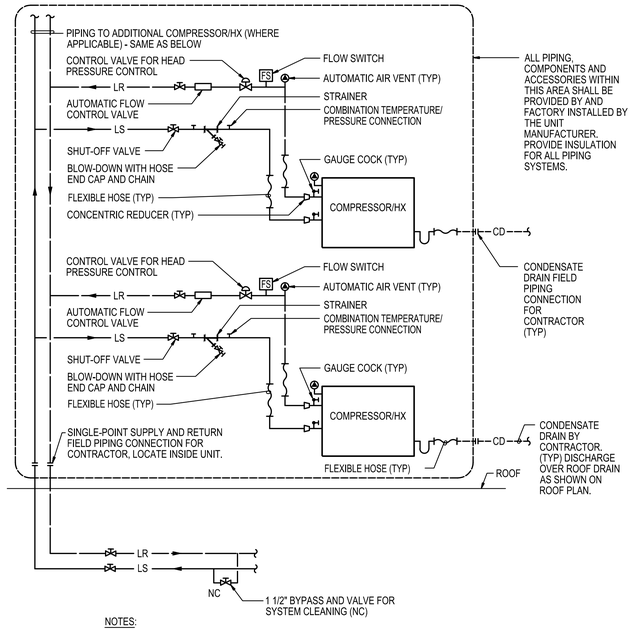

NOTES:

ARRANGEMENT SHOWN IS FOR UNITS WITH MULTIPLE COMPRESSOR/HX. PIPING ARRANGEMENT INDICATED FOR EACH COMPRESSOR/HX APPLIES TO UNITS WITH ONLY ONE COMPRESSOR/HX. COORDINATE NUMBER OF COMPRESSORS/HX WITH MANUFACTURERS APPROVED SHOP DRAWINGS.

LOCATE FLANGES AND PIPING SO THAT COILS AND FILTERS MAY BE REMOVED FROM UNITS OR DUCTS WITHOUT INTERFERENCE.

VALVES AND ACCESSORIES SHALL BE LINE SIZE, NOT COIL CONNECTION SIZE.

PIPE CONNECTIONS TO PRODUCE WATER/AIR COUNTERFLOW.

DIAGRAM 1/M5.2
TYPICAL PIPING CONNECTIONS TO ENERGY RECOVERY UNIT (ERU-1), DEDICATED OUTDOOR AIR SYSTEMS (DOAS), AND ROOFTOP HEAT PUMP UNITS (RHPU)

NOT TO SCALE

FOR DOAS-3, RHPU-1, AND RHPU-2: PROVIDE HEAT TRACE CABLE FOR ALL PIPING (BOTH FACTORY AND FIELD INSTALLED) LOCATED ABOVE THE ROOF DECK.

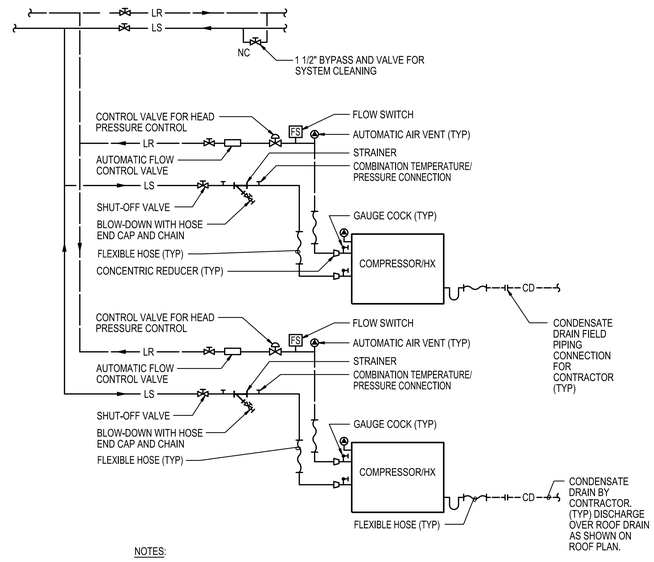

NOTES:

ARRANGEMENT SHOWN IS FOR UNITS WITH MULTIPLE COMPRESSOR/HX. PIPING ARRANGEMENT INDICATED FOR EACH COMPRESSOR/HX APPLIES TO UNITS WITH ONLY ONE COMPRESSOR/HX. COORDINATE NUMBER OF COMPRESSORS/HX WITH MANUFACTURERS APPROVED SHOP DRAWINGS.

LOCATE FLANGES AND PIPING SO THAT COILS AND FILTERS MAY BE REMOVED FROM UNITS OR DUCTS WITHOUT INTERFERENCE.

VALVES AND ACCESSORIES SHALL BE LINE SIZE, NOT COIL CONNECTION SIZE.

PIPE CONNECTIONS TO PRODUCE WATER/AIR COUNTERFLOW.

DIAGRAM 2/M-5.2
TYPICAL PIPING CONNECTIONS TO ENERGY RECOVERY UNIT (ERU-2)

NOT TO SCALE

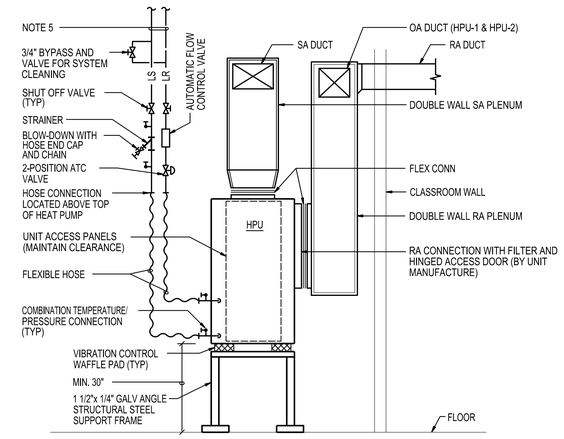

NOTES:

1. ALL VALVES IN MECHANICAL CLOSETS SHALL BE LOCATED MAXIMUM 7'-0" ABOVE FLOOR.
2. SEE PART PLANS FOR UNIT CONFIGURATION; RIGHT RETURN AS DETAILED.
3. INSTALL FAN COIL UNITS TO MAINTAIN ACCESS AT FRONT AND SIDE OF UNIT.
4. SEE NOTES ON FAN COIL UNIT SCHEDULE FOR ADDITIONAL REQUIREMENTS.
5. ANGLE SUPPORT FRAME SHALL HAVE DOWN TURNED ANGLES ON ALL FOUR SIDES.
6. CONTRACTOR SHALL PROVIDE MOCK-UP OF MECHANICAL CLOSET AND OBTAIN APPROVAL FROM ARCHITECT PRIOR TO INSTALLATION OF OTHER UNITS.
7. SEE PART PLANS AND GENERAL NOTES ON DRAWINGS M4.02 FOR ADDITIONAL INFORMATION CONCERNING UNIT INSTALLATION REQUIREMENTS.

DETAIL 3/M5.2
TYPICAL PIPING AND DUCT CONNECTIONS TO VERTICAL HEAT PUMP UNITS

NOT TO SCALE

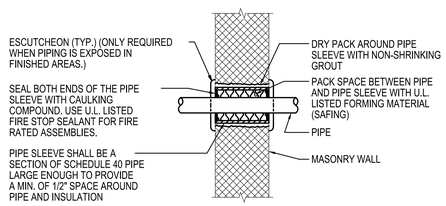

NOTES:

THIS DETAIL APPLIES TO BOTH INSULATED AND NON-INSULATED PIPE.

THIS DETAIL IS THE MINIMUM REQUIREMENT. INSTALLATION MUST BE IN ACCORDANCE WITH INSTRUCTIONS BY MANUFACTURER OF FIRE STOP SEALANT.

DETAIL 4/M5.2
PIPE THROUGH INTERIOR MASONRY WALL

NOT TO SCALE

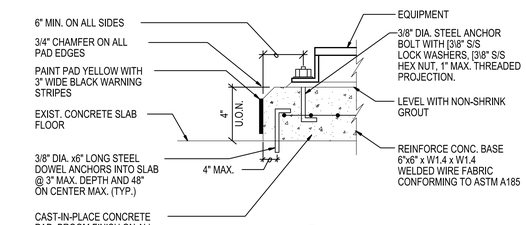

DETAIL 5/M5.2
TYPICAL CONCRETE HOUSKEEPING PAD

NOT TO SCALE

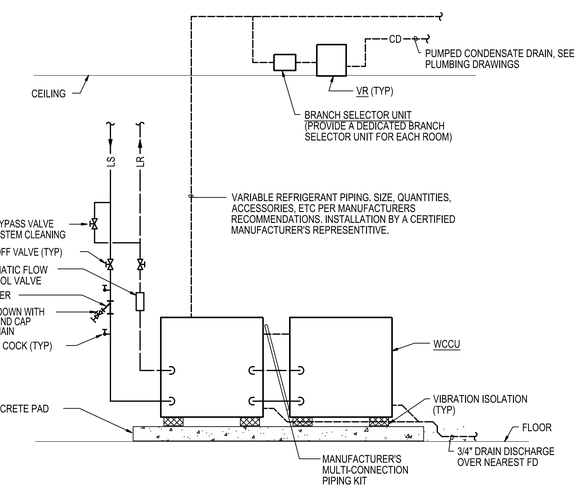

DIAGRAM 8/M5.2
PIPING CONNECTIONS TO WATER COOLED CONDENSING UNIT FOR VARIABLE REFRIGERANT FLOW SYSTEM (WCCU-1)

NOT TO SCALE

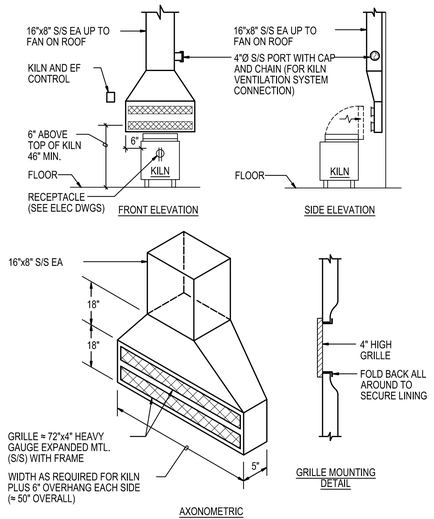

KILN HOOD AND ASSOCIATED DUCTWORK SHALL BE CONSTRUCTED FROM 18 GAUGE TYPE 304 STAINLESS STEEL WITH GROUND AND POLISHED WELDS

DETAIL 9/M5.2
KILN VENTILATION GRILLES

NOT TO SCALE

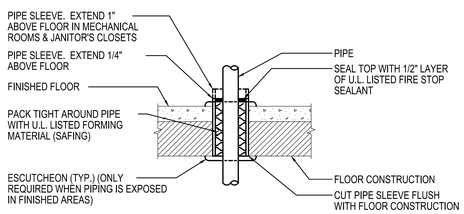

NOTES:

THIS DETAIL APPLIES TO BOTH INSULATED AND NON-INSULATED PIPE.

THIS DETAIL IS THE MINIMUM REQUIREMENT. INSTALLATION MUST BE IN ACCORDANCE WITH INSTRUCTIONS BY MANUFACTURER OF FIRE STOP SEALANT.

DETAIL 6/M5.2
PIPE THROUGH FLOOR

NOT TO SCALE

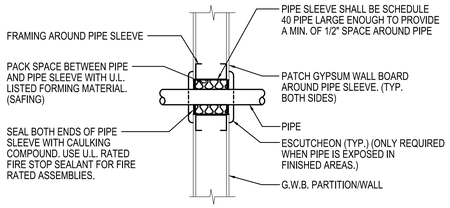

NOTES:

THIS DETAIL APPLIES TO BOTH INSULATED AND NON-INSULATED PIPE.

THIS DETAIL IS THE MINIMUM REQUIREMENT. INSTALLATION MUST BE IN ACCORDANCE WITH INSTRUCTIONS BY MANUFACTURER OF FIRE STOP SEALANT.

DETAIL 7/M5.2
PIPE THROUGH INTERIOR METAL STUD G.W.B. PARTITION OR WALL

NOT TO SCALE

James Posey Associates
Engineering Your Vision
Mechanical & Electrical Engineers
jamesposey.com
3112 Lord Baltimore Drive
Baltimore, MD 21244
tel 410-265-6100
fax 410-298-9820

Professional Certification. I hereby certify that these documents were prepared or approved by me, and that I am a duly licensed professional engineer under the laws of the state of Maryland, License No. 33986. Expiration date: 01-16-2017.

JPA PROJECT NO. 6542-15

11720 Beltsville Drive
Suite 600
Calverton, MD 20705
Tel: 301.595.1000
www.grimmandparker.com
GRIMM AND PARKER

GP #21541

DETAILS AND DIAGRAMS

LANSDOWNE ELEMENTARY SCHOOL
2301 ALMA ROAD, BALTIMORE, MD

DATE	DESCRIPTION
10/7/16	ADD NO. 1

M-5.2

11/17/16
BID SET

November 10, 2016 6:38 p.m.
Drawing: T:\6542-15\S-DRAWINGS\6542S2.DWG M2-DOAS.DWG

© 2016 James Posey Associates, Inc.

© GRIMM AND PARKER, P.C. 2014

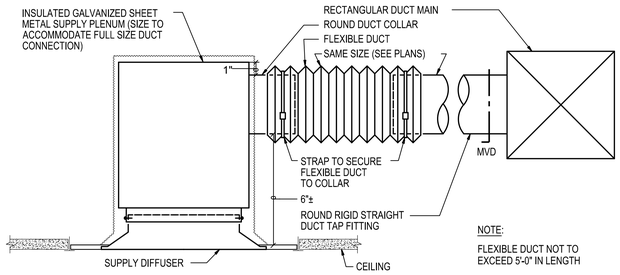

NOTE:
FLEXIBLE DUCT NOT TO EXCEED 5'-0" IN LENGTH

DETAIL 1/M5.3
TYPICAL FLEXIBLE DUCT CONNECTION TO SQUARE OR RECTANGULAR NECK DIFFUSER
NOT TO SCALE

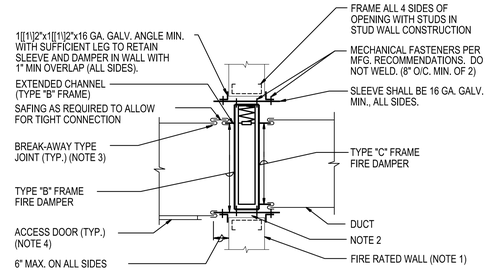

SUPPLY AIR & OUTSIDE AIR SHALL BE TYPE "C" FRAME
(ILLUSTRATED ON RIGHT SIDE CONNECTION TO DAMPER)

RETURN AIR & EXHAUST AIR SHALL BE TYPE "B" FRAME
(ILLUSTRATED ON LEFT SIDE CONNECTION TO DAMPER)

NOTES:

1. FIRE DAMPERS ARE AN INTEGRAL PART OF THE FIRE RATED PARTITION.
2. OPENING IN WALL SHALL BE WITHIN MFG. RECOMMENDATIONS FOR MIN. AND MAX. CLEARANCE.
3. BREAK-AWAY TYPE JOINT SHALL BE UL 555 AND SMACNA APPROVED FOR DUCT-SLEEVE CONNECTION. DO NOT PROVIDE RIGID CONNECTION UNLESS OTHERWISE REQUIRED.
4. PROVIDE ACCESS DOOR FOR EACH PANEL OF MULTI-PANEL FIRE DAMPER INSTALLATION.

DETAIL 2/M5.3
TYPICAL FIRE DAMPER INSTALLATION IN WALL
NOT TO SCALE

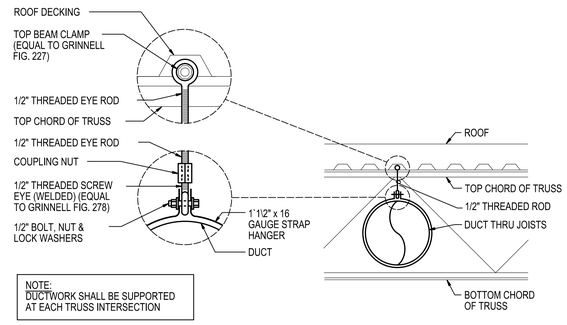

NOTE:
DUCTWORK SHALL BE SUPPORTED AT EACH TRUSS INTERSECTION

DETAIL 3/M5.3
SUPPORT OF EXPOSED ROUND DUCTWORK IN GYMNASIUM AND CAFETERIA
NOT TO SCALE

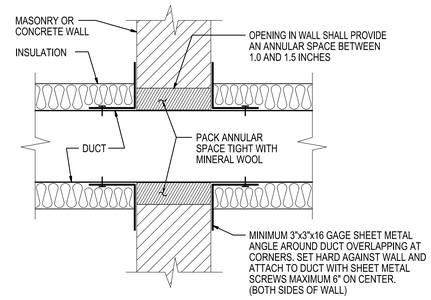

NOTE: THIS DETAIL IS A MINIMUM REQUIREMENT. CONTRACTOR SHALL VERIFY THAT LOCAL AUTHORITIES HAVING JURISDICTION ACCEPT THIS CONSTRUCTION, OR MAKE THE REQUIRED REVISIONS WHERE REQUIREMENTS ARE MORE STRINGENT.

DETAIL 4/M5.3
DUCT PENETRATION THRU MASONRY OR CONCRETE WALL WITHOUT FIRE DAMPER
NOT TO SCALE

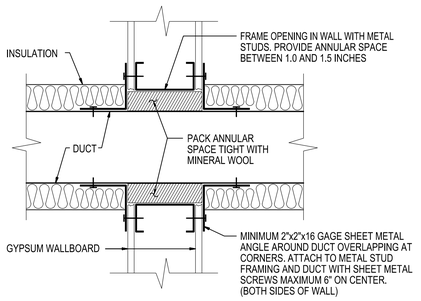

NOTE: THIS DETAIL IS A MINIMUM REQUIREMENT. CONTRACTOR SHALL VERIFY THAT LOCAL AUTHORITIES HAVING JURISDICTION ACCEPT THIS CONSTRUCTION, OR MAKE THE REQUIRED REVISIONS WHERE REQUIREMENTS ARE MORE STRINGENT.

DETAIL 5/M5.3
DUCT PENETRATION THROUGH STUD WALL WITHOUT FIRE DAMPER
NOT TO SCALE

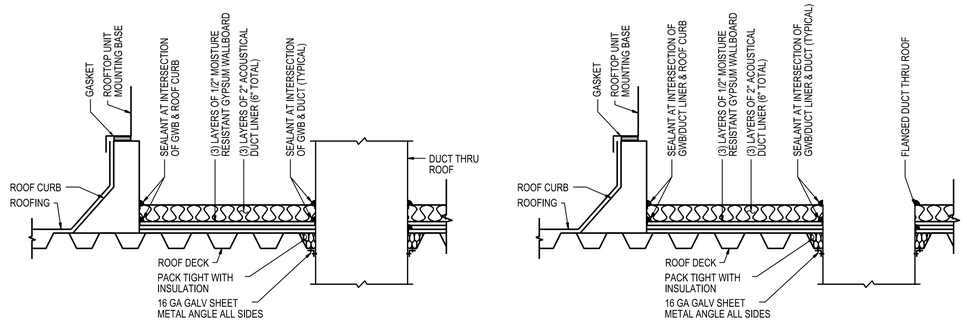

STANDARD CURBS

PLENUM CURBS

DETAIL 6/M5.3
TYPICAL ACOUSTICAL TREATMENT BELOW DEDICATED OUTDOOR AIR SYSTEM UNITS (DOAS) ROOFTOP HEATPUMP UNITS (RHPU), AND ENERGY RECOVERY UNIT (ERU-1)
NOT TO SCALE

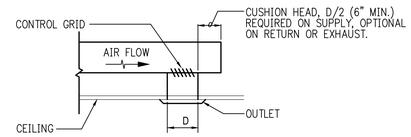

OUTLET LOCATED AT END OF RUN

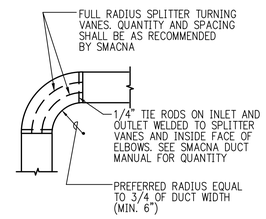

RADIUS TYPE ELBOW

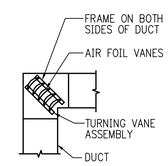

SQUARE TYPE ELBOW

DETAIL 7/M5.3
TYPICAL DUCT DETAILS
NOT TO SCALE

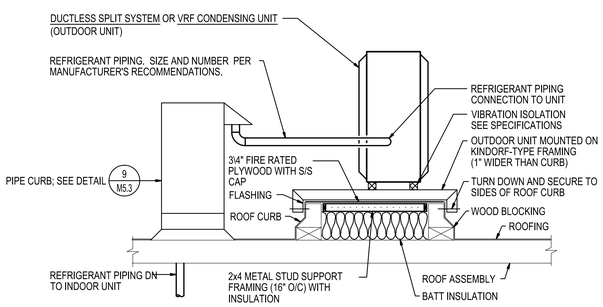

DETAIL 8/M5.3
DUCTLESS SPLIT SYSTEM OUTDOOR UNIT AND AIR COOLED CONDENSING UNIT INSTALLATION
NOT TO SCALE

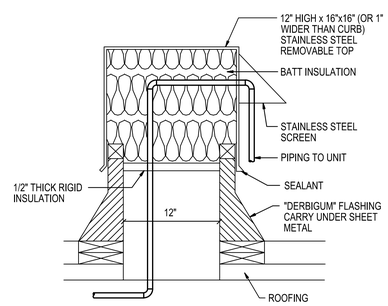

DETAIL 9/M5.3
PIPE PENETRATION THROUGH ROOF
NOT TO SCALE

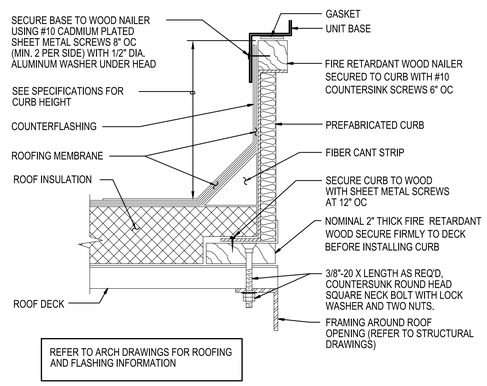

REFER TO ARCH DRAWINGS FOR ROOFING AND FLASHING INFORMATION

DETAIL 10/M5.3
TYPICAL ROOF CURB INSTALLATION
NOT TO SCALE

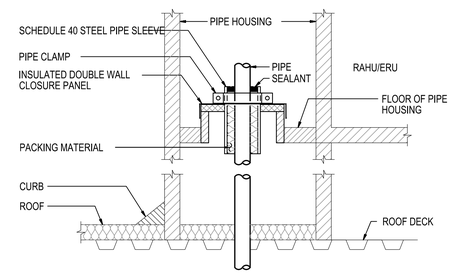

PROVIDE SEALANT BETWEEN PIPE SLEEVE AND INSULATED DOUBLE WALL CLOSURE PANEL

DETAIL 11/M5.3
PIPE THROUGH FLOOR OF RAHU/DOAS PIPE HOUSING
NOT TO SCALE

James Posey Associates
Engineering Your Vision
Mechanical & Electrical Engineers
jamesposey.com
3112 Lord Baltimore Drive
Baltimore, MD 21244
tel 410-265-6100
fax 410-298-9820

Professional Certification. I hereby certify that these documents were prepared or approved by me, and that I am a duly licensed professional engineer under the laws of the state of Maryland, License No. 33986. Expiration date: 01-16-2017.

JPA PROJECT NO. 6542-15

11720 Beltsville Drive
Suite 600
Calverton, MD 20705
Tel: 301.595.1000
www.grimmandparker.com
GRIMM AND PARKER

GP #21541

DETAILS AND DIAGRAMS

LANSDOWNE ELEMENTARY SCHOOL
2301 ALMA ROAD, BALTIMORE, MD

DATE	DESCRIPTION

M-5.3
11/17/16
BID SET

November 10, 2016 6:38 a.m.
Drawing: T:\6542-15\D-DRAWINGS\6542M53.DWG MCHUGHMEC

© 2016 James Posey Associates, Inc.

DEDICATED OUTDOOR AIR SYSTEM SCHEDULE (WITH HEAT PUMP HEATING / COOLING)

UNIT NO	AREAS SERVED	SUPPLY FAN WITH VFD CFM	SUPPLY FAN ESP (IN WC)	SUPPLY FAN TSP (IN WC)	SUPPLY FAN FAN TYPE	SUPPLY FAN DRIVE	SUPPLY FAN WHEEL DIA (IN)	SUPPLY FAN MAX RPM	SUPPLY FAN BRAKE/MOTOR HP	MIN FILTER AREA (SF)	EXHAUST FAN WITH VFD CFM	EXHAUST FAN ESP (IN WC)	EXHAUST FAN TSP (IN WC)	EXHAUST FAN FAN TYPE	EXHAUST FAN DRIVE	EXHAUST FAN WHEEL DIA (IN)	EXHAUST FAN MAX RPM	EXHAUST FAN BRAKE/MOTOR HP
DOAS-1	EAST CLASSROOMS	13,150	0.9	5.3	PLENUM	DIRECT	27	1,725	15.0 / 20.0	32.0	10,775	0.9	3.4	PLENUM	BELT	24.5	1,750	8.5 / 10.0
DOAS-2	WEST CLASSROOM	12,200	0.9	5.0	PLENUM	DIRECT	27	1,650	13.2 / 20.0	32.0	10,200	1.0	3.2	PLENUM	BELT	24.5	1,750	7.9 / 10.0
DOAS-3	ADMINISTRATION AREAS	2,800	1.1	2.34	PLENUM	DIRECT	24.5	1,200	1.65 / 2.0	8.0	2,225	0.9	2.9	PLENUM	BELT	22	800	0.39 / 1.0

UNIT NO	HEAT PUMP COIL SECTION ROWS	APD (IN WC)	MIN FACE AREA (SF)	GPM	MAX WPD (FT)	COOLING MODE TOTAL MBH	COOLING EDB (F)	COOLING EWB (F)	COOLING LDB (F)	COOLING EWT (F)	COOLING LWT (F)	HEATING MODE MBH	HEATING EDB (F)	HEATING LDB (F)	HEATING EWT (F)	HEATING LWT (F)	ELECTRICAL VOLTAGE/ PHASE	MCA	MOP	MANUFACTURER / MODEL	NOTES
DOAS-1	8	0.34	30.0	130	15	590	72.8	68.0	53.6	85	96.0	590	44.8	86.5	49	41.5	480V-3Ø	123	125	MUNTERS WPR-15	1,2,3,4,5,6,7,8,9,10,11,13
DOAS-2	6	0.29	28.0	121	15	560	72.6	67.9	53.6	85	96.0	580	45.2	89	49	41.3	480V-3Ø	123	125	MUNTERS WPR-15	1,2,3,4,5,6,7,8,9,10,11,13
DOAS-3	3	0.07	6.0	40	15	166	82.7	69.5	48.3	85	95.6	199	43.2	106	49	41.3	480V-3Ø	34	45	AAON RN-016	1,2,3,4,5,6,7,8,9,10,11,12

ENTHALPIC PLATE HEAT EXCHANGER (DOAS-1&2) OR ENTHALPY WHEEL (DOAS-3)

UNIT NO	EFFECTIVENESS SUMMER	EFFECTIVENESS WINTER	WINTER OA CFM	WINTER OA EAT (F) DB	WINTER OA LAT (F) DB	WINTER OA APD (IN WC)	WINTER EXHAUST CFM	WINTER EXHAUST EAT (F) DB / WB	WINTER EXHAUST LAT (F) DB	WINTER EXHAUST APD (IN WC)	SUMMER OA CFM	SUMMER OA EAT (F) DB / WB	SUMMER OA LAT (F) DB / WB	SUMMER OA APD (IN WC)	SUMMER EXHAUST CFM	SUMMER EXHAUST EAT (F) DB / WB	SUMMER EXHAUST LAT (F) DB	SUMMER EXHAUST APD (IN WC)
DOAS-1	0.65	0.74	13,150	0	44.8	1.14	10,725	70/50	15.9	0.95	13,150	95 / 78	72.8/68	1.14	10,725	60.2/57.0	87.5	0.95
DOAS-2	0.65	0.74	12,200	0	45.2	1.1	10,200	70/50	16	0.93	12,200	95 / 78	72.6/67.9	1.1	10,200	60.2/57.0	87.4	0.93
DOAS-3	0.65	0.76	2,800	0	43.2	0.67	2,225	70/50	15.6	0.67	2,800	95 / 78	82.6/69.5	0.67	2,225	75 / 62	90.5	0.67

UNIT NO	PLATE AND FRAME HEAT EXCHANGER HX OA REHEAT CFM	HX OA REHEAT EAT (F) DB	HX OA REHEAT LAT (F) DB	HX OA REHEAT APD (IN WC)	HX EXHAUST PRECOOL CFM	HX EXHAUST PRECOOL EAT (F) DB	HX EXHAUST PRECOOL LAT (F) DB	HX EXHAUST PRECOOL APD (IN WC)	WATER-COOLED CONDENSING UNIT TONS	REFRIG TYPE	COMP TYPE	STAGES	GENERAL EER	COP	LENGTH (IN)	WIDTH (IN)	HEIGHT (IN)	MAX OPERATING WEIGHT (LBS)
DOAS-1	13,150	53.8	66	1.17	10,725	75	60.2	0.67	40	R-410A	SCROLL	MODULATING	18.0	5.5	509	125	129	30,000
DOAS-2	12,200	53.8	66.1	1.05	10,200	75	60.2	0.62	40	R-410A	SCROLL	MODULATING	17.0	5	509	125	129	30,000
DOAS-3	-	-	-	-	-	-	-	-	10	R-410A	SCROLL	MODULATING	19.2	6.63	353	65	89	13,000

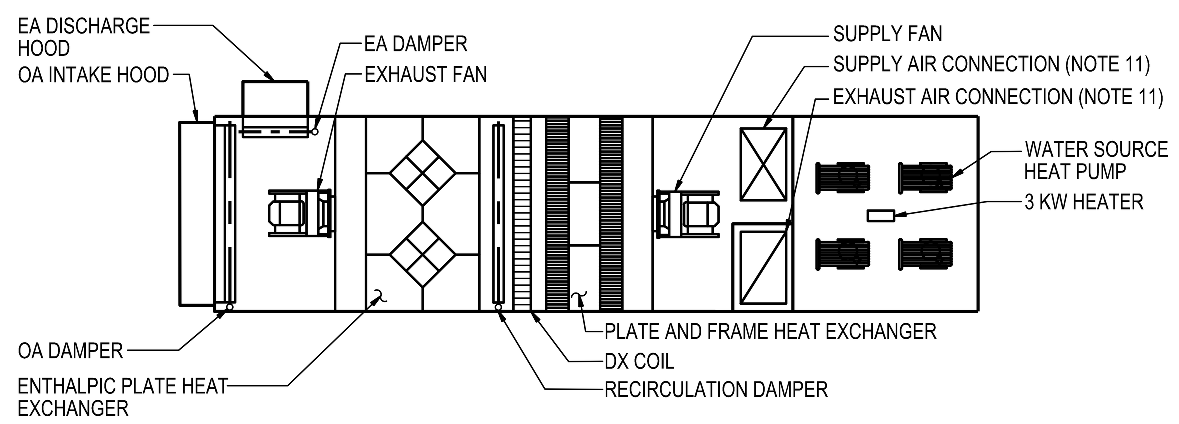

COMPONENT DIAGRAM - PLAN VIEW

DOAS-1 AND 2

NOT TO SCALE

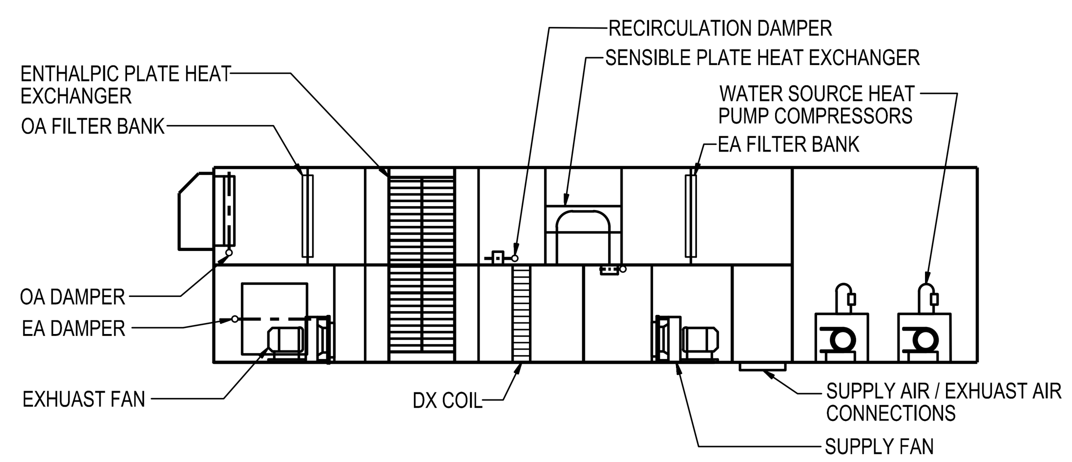

COMPONENT DIAGRAM - ELEVATION VIEW

DOAS-1 AND 2

NOT TO SCALE

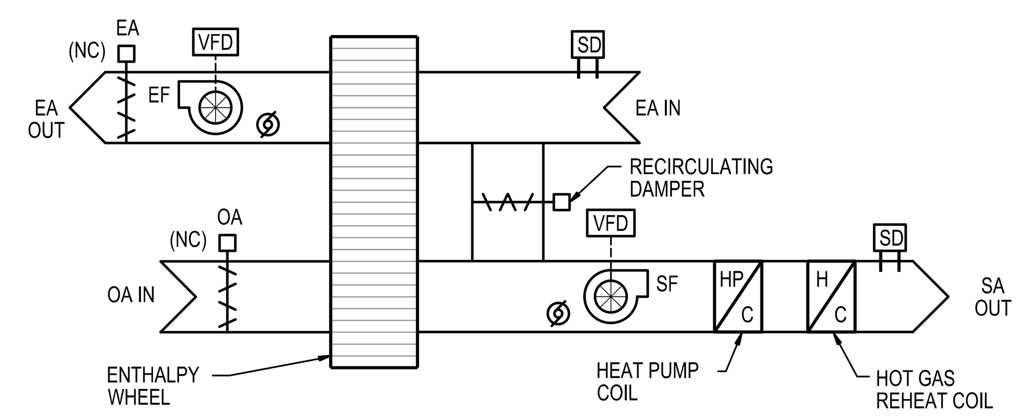

SCHEMATIC DIAGRAM

DOAS-3

NOT TO SCALE

NOTES:

1. UNIT SHALL MEET MINIMUM EFFICIENCY REQUIREMENTS OF ANSI / ARI / ASHRAE ISO 13256-1 FOR WATER SOURCE HEAT PUMPS.
2. PROVIDE REMOTE DISCONNECT SWITCHES IN LIEU OF INTEGRAL DEVICES.
3. PROVIDE 30" HIGH FULL SIZE PLENUM TYPE ROOF CURB.
4. UNIT COMPLETE WITH 2" (MERV 8) EXHAUST AIR FILTER AND 2" (MERV 8) OUTDOOR AIR PRE-FILTER & 4" (MERV 13) OUTDOOR AIR FINAL FILTER; TSP BASED IN MIDLIFE FILTER CONDITIONS.
5. UNIT SHALL BE PAINTED IN FACTORY; OPTIONAL UNIT COLOR AS SELECTED BY ARCHITECT.
6. UNIT SHALL BE PROVIDED WITH FACTORY INSTALLED VALVES, PIPING, AND ACCESSORIES PER DETAIL 1 / M-5.2
7. PROVIDE VFD FOR SUPPLY AND EXHAUST FANS; MOUNT ALL VFDS IN CONTROL PANEL TO ALLOW ACCESS FOR SERVICE; DO NOT MOUNT DRIVE ADJACENT TO FAN.
8. DISPLAY PANEL SHALL BE MOUNTED IN MAIN CONTROL PANEL.
9. UNIT SHALL BE FURNISHED COMPLETE WITH PACKAGED CONTROLS WITH BACNET PROTOCOL; SEE SPECIFICATIONS FOR DESCRIPTION OF OPERATION AND COORDINATION WITH ATC REQUIREMENTS.
10. PROVIDE 3 KW ELECTRIC UNIT HEATER AT 277V-1Ø, WITHIN COMPRESSOR SECTION, WITH SEPARATE STANDBY POWER CONNECTION.
11. COORDINATE UNIT SUPPLY AND EXHAUST AIR CONNECTIONS WITH ROOF PLAN DRAWING M1.3.
12. PROVIDE MODULATING HOT GAS REHEAT COIL; SIZE FOR 55°F EAT AND 72°F LAT.
13. PROVIDE MINIMUM ONE DIGITAL SCROLL OR VARIABLE SPEED TYPE COMPRESSOR PER UNIT.

ROOFTOP WATER SOURCE HEAT PUMP UNIT SCHEDULE

UNIT NO	AREAS SERVED	MINIMUM OA CFM	SUPPLY FAN CFM	SUPPLY FAN ESP (IN W.C.)	SUPPLY FAN TSP (IN W.C.)	SUPPLY FAN FAN TYPE	SUPPLY FAN MAX RPM	SUPPLY FAN BRAKE/MOTOR HP	POWER EXHAUST FAN CFM	POWER EXHAUST FAN ESP (IN W.C.)	POWER EXHAUST FAN TSP (IN W.C.)	POWER EXHAUST FAN FAN TYPE / DUTY	POWER EXHAUST FAN MAX RPM	POWER EXHAUST FAN MOTOR HP	MIN FILTER AREA (SF)	HOT GAS REHEAT COIL MBH	HOT GAS REHEAT COIL EAT	HOT GAS REHEAT COIL LAT
RHPU-1	KITCHEN AREA	300	1,200	0.75	1.70	PLENUM	1,600	0.64 / 1.0	-	-	-	-	-	-	2.4	23	52.5	70
RHPU-2	COMMUNITY	850	2,600	0.85	1.70	PLENUM	2,200	1.1 / 2	1,750	0.25	0.38	PLENUM / EXHAUST	1,440	1	5.2	49	52.5	70

UNIT NO	HEAT PUMP SECTION COOLING MODE SEN MBH	COOLING TOTAL MBH	COOLING EAT (DB)	COOLING EAT (WB)	COOLING LAT (DB)	COOLING LAT (WB)	COOLING EWT	COOLING LWT	COOLING GPM	COOLING WPD (FT)	HEATING MODE MBH	HEATING EAT	HEATING LAT	HEATING EWT	HEATING LWT	EER	COP	GENERAL LENGTH (IN.)	WIDTH (IN.)	HEIGHT (IN.)	MAXIMUM WEIGHT (LBS)	VOLTAGE/ PHASE	MCA	MOP	MFR/ MODEL (AAON)	NOTES
RHPU-1	33	49.1	80.0	66.9	52.4	52.2	85	95	12	10	51	55.0	93.4	49	42	14.4	4.7	82	44	43	1,500	480V-3Ø	13	20	RQ-004	1,2,3,4,5,6,7,8,9
RHPU-2	77	113	81.5	68.2	52.5	51.9	85	94	32	20	96	47.1	92.7	49	42	17.1	4.6	115	75	55	2,200	480V-3Ø	21	25	RN-011	1,2,3,4,5,6,7,8,9

NOTES:

1. UNIT COMPLETE WITH R-410A REFRIGERANT.
2. PROVIDE REMOTE DISCONNECT SWITCHES (WITH PHASE PROTECTION) IN LIEU OF INTEGRAL DEVICES.
3. UNIT COMPLETE WITH HOT GAS REHEAT COIL WITH MODULATING TYPE CONTROL.
4. UNIT SHALL BE FURNISHED COMPLETE WITH PACKAGED CONTROLSWITH BACNET PROTOCOL; SEE SPECIFICATIONS FOR DESCRIPTION OF OPERATION AND COORDINATION WITH ATC REQUIREMENTS.
5. PROVIDE DIRECT DRIVE TYPE FANS.
6. PROVIDE VFD FOR SUPPLY AND EXHAUST FANS; MOUNT ALL VFDS IN CONTROL PANEL TO ALLOW ACCCESS FOR SERVICE; DO NOT MOUNT DRIVE ADJACENT TO FAN.
7. PROVIDE HEAT TRACE FOR ALL LS / LR PIPING LOCATED ABOVE THE ROOF.
8. PROVIDE 2" THICK MERV 8 AND 4" THICK MERV 13 AIR FILTERS.
9. UNIT SHALL BE PAINTED IN FACTORY; OPTIONAL UNIT COLOR AS SELECTED BY ARCHITECT.

PUMP SCHEDULE

DESIG	SERVICE	GPM	FT HD	SIZE (IN)	HP	VOLTAGE	RPM	MFR'S MODEL NO (TACO)	NOTES
P-1	GEOTHERMAL LOOP	750	100	4x5	30	480V-3Ø	1760	FI4013	1
P-2	GEOTHERMAL LOOP	750	100	4x5	30	480V-3Ø	1760	FI4013	1

NOTES:

1. MOTOR SHALL BE SUITABLE FOR USE WITH VARIABLE FREQUENCY DRIVE.

James Posey Associates
Engineering Your Vision
Mechanical & Electrical Engineers
jamesposey.com
tel 410-265-6100
fax 410-298-9820
3112 Lord Baltimore Drive
Baltimore, MD 21244

Professional Certification. I hereby certify that these documents were prepared or approved by me, and that I am a duly licensed professional engineer under the laws of the State of Maryland, License No. 33986, Expiration date: 01-16-2017.

JPA PROJECT NO. 6542-15

11720 Beltsville Drive
Suite 600
Calverton, MD 20705
Tel: 301.595.1000
www.grimmandparker.com
G+P GRIMM AND PARKER

GP #21541

SCHEDULES

LANSDOWNE ELEMENTARY SCHOOL
2301 ALMA ROAD, BALTIMORE, MD

DATE	DESCRIPTION

M-6.1

11/17/16
BID SET

© GRIMM AND PARKER, P.C. 2014
© 2016 James Posey Associates, Inc.

© GRIMM AND PARKER, P.C. 2014

ENERGY RECOVERY UNIT SCHEDULE

UNIT NO	AREA SERVED	OA CFM	SUPPLY FAN WITH VFD								MIN FILTER AREA (SF)	RETURN FAN WITH VFD							
			CFM	ESP (IN WC)	TSP (IN WC)	FAN TYPE	DRIVE	WHEEL DIA (IN)	MAX RPM	MOTOR HP		CFM	ESP (IN WC)	TSP (IN WC)	FAN TYPE	DRIVE	WHEEL DIA (IN)	MAX RPM	MOTOR HP
ERU-1	CAFETERIA	650/2575	4,200	0.75	3.49	PLENUM	DIRECT	16	3,000	7.5	12.5	3,650	0.80	2.06	PLENUM	DIRECT	16	2,425	3
ERU-2	GYMNASIUM	1,375	3,500	0.75	4.27	PLENUM	DIRECT	15	3,525	5	12.5	3,175	0.85	2.3	PLENUM	DIRECT	16	2,275	3

UNIT NO	HEAT PUMP COIL SECTION																HOT GAS REHEAT COIL				MANUFACTURER / MODEL
						COOLING MODE						HEATING MODE									
	ROWS	APD (IN WC)	MIN FACE AREA (SF)	GPM	MAX WPD (FT)	TOTAL MBH	EDB (F)	EWB (F)	LDB (F)	EWT (F)	LWT (F)	MBH	EDB (F)	LDB (F)	EWT (F)	LWT (F)	MBH	EDB (F)	LDB (F)	CONTROL	
ERU-1	4	0.4	10.0	45.0	15.0	200	80.8	68.4	53.3	85	96.1	213	53.6	100	49	41.5	64	53.3	67.3	MODULATING	MUNTERS PVE-05
ERU-2	8	0.9	7.0	35.0	15.0	150	79.3	66.6	52.2	85	96.1	146	60.0	98.5	49	41..5	53	52.2	66.1	MODULATING	MUNTERS PVE-04

UNIT NO	ENTHALPIC PLATE HEAT EXCHANGER																	
	EFFECTIVENESS		WINTER OA				WINTER EXHAUST				SUMMER OA				SUMMER EXHAUST			
	SUMMER	WINTER	CFM	EAT (F) DB	LAT (F) DB	APD (IN WC)	CFM	EAT (F) DB / WB	LAT (F) DB	APD (IN WC)	CFM	EAT (F) DB / WB	LAT (F) DB / WB	APD (IN WC)	CFM	EAT (F) DB / WB	LAT (F) DB / WB	APD (IN WC)
ERU-1	0.6	0.74	2,575	0	42.5	0.73	2,025	71.3/50.6	16.2	0.6	2,575	95/78	83.8/71.5	0.73	2,025	76.4/63.0	90.9/72.7	0.6
ERU-2	0.64	0.77	1,375	0	40.9	0.67	1,000	71.3/50.6	13.9	0.5	1,375	95/78	84.2/71.7	0.67	1,000	76.3/63.0	91.5/73.2	0.5

UNIT NO	WATER COOLED CONDENSING UNIT				ELECTRICAL			GENERAL						NOTES
	TONS	REFRIG TYPE	COMP TYPE	STAGES	VOLTAGE/ PHASE	MCA	MOP	EER	COP	LENGTH (IN)	WIDTH (IN)	HEIGHT (IN)	MAX OPERATING WEIGHT (LBS)	
ERU-1	15	R-410A	SCROLL	MODULATING	480V-3Ø	59	80	15.5	4	317	89	89	13,000	1,2,3,4,5,6,7,8,9,10,11,13,16
ERU-2	10	R-410A	SCROLL	MODULATING	480V-3Ø	45	60	18	5	305	77	77	11,000	1,2,3,4,5,6,7,8,9,12,16

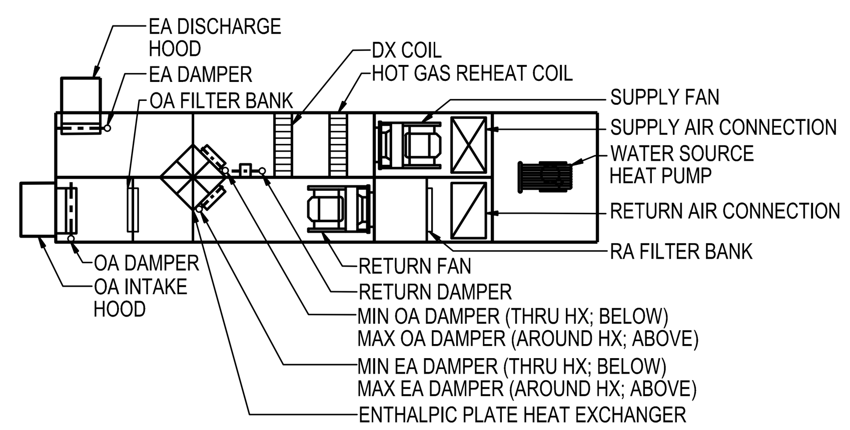

COMPONENT DIAGRAM - PLAN VIEW
ERU-1
NOT TO SCALE

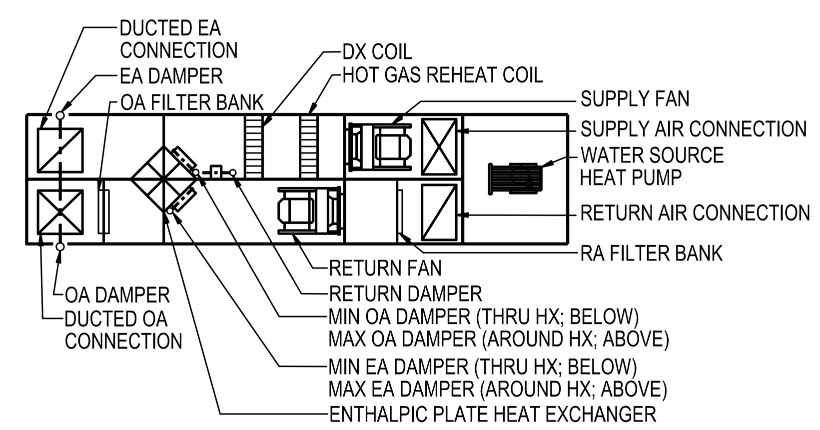

COMPONENT DIAGRAM - PLAN VIEW
ERU-2
NOT TO SCALE

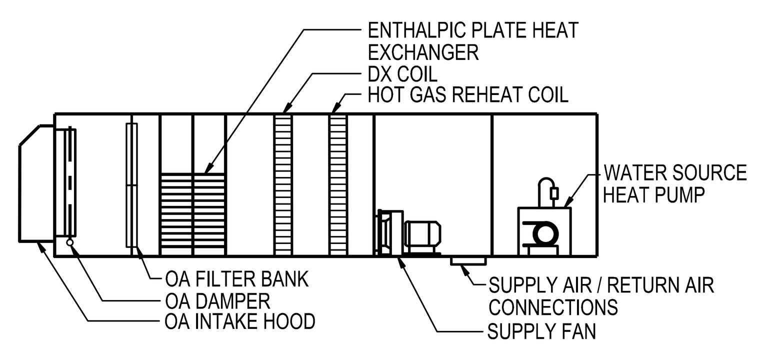

COMPONENT DIAGRAM - ELEVATION VIEW
ERU-1
NOT TO SCALE

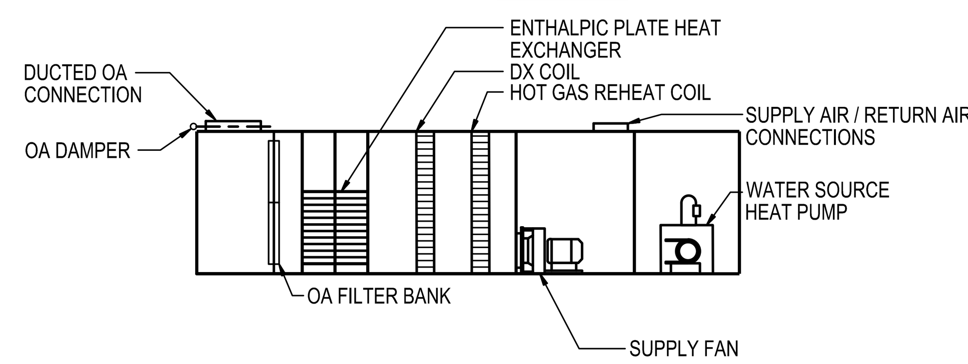

COMPONENT DIAGRAM - ELEVATION VIEW
ERU-2
NOT TO SCALE

NOTES:

1. UNIT SHALL MEET MINIMUM EFFICIENCY REQUIREMENTS OF ANSI / ARI / ASHRAE ISO 13256-1 FOR WATER SOURCE HEAT PUMPS.
2. PROVIDE REMOTE DISCONNECT SWITCHES IN LIEU OF INTEGRAL DEVICES.
3. PROVIDE FULL SIZE ROOF CURB.
4. UNIT COMPLETE WITH 2" (MERV 8) EXHAUST AIR FILTER AND 2" (MERV 8) OUTDOOR AIR PRE-FILTER & 4" (MERV 13) OUTDOOR AIR FINAL FILTER; TSP BASED IN MIDLIFE FILTER CONDITIONS.
5. UNIT SHALL BE PAINTED IN FACTORY; OPTIONAL UNIT COLOR AS SELECTED BY ARCHITECT.
6. UNIT SHALL BE PROVIDED WITH FACTORY INSTALLED VALVES, PIPING, AND ACCESSORIES PER DETAIL 1/M-5.2
7. PROVIDE VFD FOR SUPPLY AND RETURN FANS; MOUNT ALL VFDS IN CONTROL PANEL TO ALLOW ACCESS FOR SERVICE; DO NOT MOUNT DRIVE ADJACENT TO FAN.
8. DISPLAY PANEL SHALL BE MOUNTED IN MAIN CONTROL PANEL.
9. UNIT SHALL BE FURNISHED COMPLETE WITH PACKAGED CONTROLS WITH BACNET PROTOCOL; SEE SPECIFICATIONS FOR DESCRIPTION OF OPERATION AND COORDINATION WITH ATC REQUIREMENTS.
10. PROVIDE 3 KW ELECTRIC UNIT HEATER AT 277V-1Ø, WITHIN COMPRESSOR SECTION, WITH SEPARATE STANDBY POWER CONNECTION.
11. PROVIDE OUTDOOR UNIT CONSTRUCTION.
12. PROVIDE INDOOR UNIT CONSTRUCTION.
13. MULTIPLE OA VALUES PROVIDED DENOTE MIN/MAX SETPOINT UNDER CO_2 RESET.
14. PROVIDE AIRFLOW MEASURING TYPE MINIMUM OA DAMPER.
15. PROVIDE MINIMUM ONE DIGITAL SCROLL OR VARIABLE SPEED TYPE COMPRESSOR PER UNIT.
16. PROVIDE HOT GAS REHEAT COIL; SIZE FOR 55°F EAT AND 72°F LAT.

ELECTRIC RESISTANCE TERMINAL UNIT SCHEDULE

DESIG	AREA SERVED	TYPE	CFM STD AIR	KW	CABINET SIZE			RECESS DEPTH (IN)	MCA	ELEC	MFR'S MODEL NO. (Q-MARK)	NOTES
					LENGTH	HEIGHT	DEPTH					
ECUH-1	CORRIDOR A14	CAB/FRW	500	10.0	45	27	10	9.5	13	480V-3Ø	CU945	1,2,4,5
ECUH-2	RECEIVING B109	CAB/FRW	500	10.0	45	27	10	9.5	13	480V-3Ø	CU945	1,2,4,5
ECUH-3	CORRIDOR C11	CAB/FRC	500	10.0	45	27	10	9.5	13	480V-3Ø	CU945	1,4,5
ECUH-4	VESTIBULE C10	CAB/FRW	500	10.0	45	27	10	9.5	13	480V-3Ø	CU945	1,2,4,5
ECUH-5	STAIR ST1	CAB/FRW	500	10.0	45	27	10	9.5	13	480V-3Ø	CU945	1,2,4,5
ECUH-6	STAIR ST3	CAB/FRW	500	10.0	45	27	10	9.5	13	480V-3Ø	CU945	1,2,4,5
ECUH-7	STAIR ST2	CAB/FRW	500	10.0	45	27	10	9.5	13	480V-3Ø	CU945	1,2,4,5
ECUH-8	CORRIDOR C14	CAB/FRW	500	10.0	45	27	10	9.5	13	480V-3Ø	CU945	1,4,5
ECUH-9	CORRIDOR C12	CAB/FRW	500	10.0	45	27	10	9.5	13	480V-3Ø	CU945	1,4,5
EPUH-1	WHITING ROOM B106	PROP/V	350	5.0	-	-	-	-	18	277V-1Ø	MUH05-71	1,4
EPUH-2	MECHANICAL B110	PROP/V	350	5.0	-	-	-	-	18	277V-1Ø	MUH05-71	1,4
EPUH-3	ELECTRICAL B111	PROP/V	350	5.0	-	-	-	-	18	277V-1Ø	MUH05-71	1,4
EPUH-4	AUX. ELEC B111A	PROP/V	350	3.0	-	-	-	-	11	277V-1Ø	MUH03-71	1,4
EPUH-5	BLDG OUTSIDE STOR B112	PROP/V	350	5.0	-	-	-	-	18	277V-1Ø	MUH05-71	1,4
EPUH-6	PE - OUTDOOR EQUIP STOR B113	PROP/V	350	5.0	-	-	-	-	18	277V-1Ø	MUH05-71	1,4
EPUH-7	MECHANICAL B200	PROP/V	350	5.0	-	-	-	-	18	277V-1Ø	MUH05-71	1,4
EPUH-8	MECHANICAL B200	PROP/V	350	5.0	-	-	-	-	18	277V-1Ø	MUH05-71	1,4
EPUH-9	MECHANICAL CLOSET C219	PROP/V	350	3.0	-	-	-	-	11	277V-1Ø	MUH03-71	1,4
EPUH-10	MECHANICAL CLOSET C221	PROP/V	350	3.0	-	-	-	-	11	277V-1Ø	MUH03-71	1,4
EPUH-11	MECHANICAL CLOSET C243	PROP/V	350	3.0	-	-	-	-	11	277V-1Ø	MUH03-71	1,4
EPUH-12	MECHANICAL CLOSET C251	PROP/V	350	3.0	-	-	-	-	11	277V-1Ø	MUH03-71	1,4
EWH-1	MEN A129	W/FR	100	1.5	15	19	4	4	13	120V-1Ø	AWH-3150	3,4,5
EWH-2	WOMEN A128	W/FR	100	1.5	15	19	4	4	13	120V-1Ø	AWH-3150	3,4,5
EWH-3	TOILET B116	W/FR	100	1.5	15	19	4	4	13	120V-1Ø	AWH-3150	3,4,5
EWH-4	LOCKER B115	W/FR	100	1.5	15	19	4	4	13	120V-1Ø	AWH-3150	3,4,5
EWH-5	SERVICE B117	W/FR	100	1.5	15	19	4	4	13	120V-1Ø	AWH-3150	3,4,5
EWH-6	STORAGE B134	W/FR	100	1.5	15	19	4	4	13	120V-1Ø	AWH-3150	3,4,5
EWH-7	TOILET C145	W/FR	100	1.5	15	19	4	4	13	120V-1Ø	AWH-3150	3,4,5

TYPES:

CAB/FRW: CABINET, FULLY RECESSED IN WALL
CAB/FRC: CABINET, FULLY RECESSED IN CEILING
PROP/V: PROPELLER, VERTICAL
W/FR: WALL MOUNTED, FULLY RECESSED.

NOTES:

1. UNIT SELECTED AT HIGH SPEED AND 60 DEGREE F EAT.
2. INVERTED FLOW; TOP INLET AND BOTTOM DISCHARGE.
3. PROVIDE UNIT MOUNTED DISCONNECT SWITCH.
4. PROVIDE INTEGRAL THERMOSTAT.
5. PROVIDE TRIM COLLAR FOR RECESSED MOUNTING.

James Posey Associates
Engineering Your Vision
Mechanical & Electrical Engineers
jamesposey.com
tel 410-265-6100
fax 410-298-9820
3112 Lord Baltimore Drive
Baltimore, MD 21244

Professional Certification. I hereby certify that these documents were prepared or approved by me, and that I am a duly licensed professional engineer under the laws of the state of Maryland, License No. 33986, Expiration date: 01-16-2017.

STATE OF MARYLAND · MICHAEL PATRICK SHERREN · 33986 · PROFESSIONAL ENGINEER

JPA PROJECT NO. 6542-15

11720 Beltsville Drive
Suite 600
Calverton, MD 20705
Tel: 301.595.1000
www.grimmandparker.com
G+P GRIMM AND PARKER

GP #21541

SCHEDULES

LANSDOWNE ELEMENTARY SCHOOL
2301 ALMA ROAD, BALTIMORE, MD

DATE	DESCRIPTION
10/7/16	ADD NO. 1

M-6.2
11/17/16
BID SET

© 2016 James Posey Associates, Inc.

© GRIMM AND PARKER, P.C. 2014

FAN SCHEDULE

DESIG	AREA SERVED	DUTY	CFM	SP (IN WC)	SONES	FAN RPM (APPROX)	HP (WATTS)	WHEEL DIA (IN)	FAN TYPE	DRIVE	MFR'S NO. (TWIN CITY)	ELECTRICAL	CONTROL	NOTES
EF-1	SERVICE STORAGE/NON FOOD STORAGE/TOILET	EXHAUST	400	0.5	6.6	1325	1/8	10.9	ROOF DOWNBLAST	DIRECT	085B DCRD	120V-1PH	C	1,2,3
EF-2	R&P EQUIP STORAGE/PE-LARGE EQUIP STORAGE	EXHAUST	775	0.5	8.7	925	1/4	15.9	ROOF DOWNBLAST	DIRECT	150B DCRD	120V-1PH	C	1,2,3
EF-3	PE OUTDOOR EQUIPMENT STORAGE	EXHAUST	300	0.3	5	1175	1/8	10.9	ROOF DOWNBLAST	DIRECT	085B DCRD	120V-1PH	A	1,2,3
EF-4	KITCHEN CANOPY	EXHAUST	750	0.3	5.7	1000	1/8	12.3	ROOF UPBLAST	DIRECT	110B DCRU	120V-1PH	F	1,2,3
EF-5	BLDG OUTSIDE STOR	EXHAUST	300	0.3	5	1175	1/8	10.9	ROOF DOWNBLAST	DIRECT	085B DCRD	120V-1PH	A	1,2,3,4
EF-6A	ELEC B111	EXHAUST	325	0.3	5.6	1200	1/8	10.9	ROOF DOWNBLAST	DIRECT	085B DCRD	120V-1PH	A	1,2,3
EF-6B	ELEC B111A	EXHAUST	250	0.3	6.9	1625	1/8	8	ROOF DOWNBLAST	DIRECT	070B DCRD	120V-1PH	A	1,2,3
EF-7	MECH B110	EXHAUST	650	0.3	6.3	850	1/8	13.9	ROOF DOWNBLAST	DIRECT	130B DCRD	120V-1PH	A	1,2,3
EF-8	WHITING ROOM B106	EXHAUST	150	0.3	5.3	1400	1/8	8	ROOF DOWNBLAST	DIRECT	070B DCRD	120V-1PH	A	1,2,3
EF-9	RESTING AREA A122	EXHAUST	750	0.5	8.5	900	1/4	15.9	ROOF DOWNBLAST	DIRECT	150B DCRD	120V-1PH	F	1,2,3
EF-10	ELEC C104	EXHAUST	150	0.3	5.7	1550	1/8	8	ROOF DOWNBLAST	DIRECT	060B DCRD	120V-1PH	B	1,2,3
EF-11	LAVATORY A128/LAVATORY A129	EXHAUST	750	0.5	9.2	1025	1/4	14.5	ROOF DOWNBLAST	DIRECT	140B DCRD	120V-1PH	C	1,2,3
EF-12	COMMUNITY CONDIMENT CANOPY	EXHAUST	300	0.5	5.7	1375	1/3	11.2	ROOF UPBLAST	DIRECT	083B DCRU	120V-1PH	F	1,2,3
EF-13	WORKROOM/STORAGE/KILN C112	EXHAUST	550	0.8	7.3	1300	1/4	12.3	ROOF UPBLAST	BELT	140BHP BCRU	120V-1PH	D	1,3
EF-14	WORKROOM C207	EXHAUST	300	0.5	6.4	1325	1/8	10.9	ROOF DOWNBLAST	DIRECT	090B DCRD	120V-1PH	E	1,2,3
EF-15	LIBRARIAN OFFICE	EXHAUST	300	0.5	6.4	1325	1/8	10.9	ROOF DOWNBLAST	DIRECT	090B DCRD	120V-1PH	E	1,2,3
EF-16	WORK/RECORDS A106	EXHAUST	300	0.5	6.4	1325	1/8	10.9	ROOF DOWNBLAST	DIRECT	090B DCRD	120V-1PH	E	1,2,3
EF-17	ELEC C210	EXHAUST	150	0.3	5.7	1550	1/8	8	ROOF DOWNBLAST	DIRECT	060B DCRD	120V-1PH	B	1,2,3
EF-18	GENERAL FURNITURE STORAGE B126	EXHAUST	350	0.3	6.2	1245	1/8	10.9	ROOF DOWNBLAST	DIRECT	085B DCRD	120V-1PH	C	1,2,3
EF-19	CAN WASH	EXHAUST	150	0.3	5.3	1400	1/8	8	ROOF DOWNBLAST	DIRECT	070B DCRD	120V-1PH	A	1,2,3

NOTES:

1. PROVIDE WITH ALUMINUM BACKDRAFT DAMPER.
2. PROVIDE WITH SOLID STATE SPEED CONTROLLER.
3. PROVIDE WITH UNIT MOUNTED DISCONNECT SWITCH.
4. PROVIDE WITH EXPLOSION PROOF MOTOR.

CONTROLS:

A. ROOM TEMPERATURE SENSOR AND COMPANION DAMPER (SEE ATC SEQUENCES).
B. EXHAUST FAN WITH ROOM SENSORS (SEE ATC SEQUENCES).
C. OCCUPIED/UNOCCUPIED THROUGH ATC (SEE ATC SEQUENCES).
D. KILN EXHAUST.
E. LOCAL SWITCH WITH TIMER, BY ELECTRICAL.
F. LOCAL SWITCH WITH PILOT LIGHT, BY ELECTRICAL.

MISCELLANEOUS EQUIPMENT SCHEDULE

ITEM	DESCRIPTION	MANUFACTURER AND MODEL NO.	NOTES
EXPANSION TANK ET-1	VERTICAL DIAPHRAGM TYPE FULL ACCEPTANCE EXPANSION / COMPRESSION TANK SERVING GEOTHERMAL HEAT PUMP SYSTEM. 238 GALLON TANK VOLUME AT 20 PSI INITIAL CHARGE AND 100 PSI MAXIMUM SYSTEM PRESSURE. TANK SHALL CARRY ASME LABEL.	TACO MODEL CA-900	-
AIR SEPARATOR AS-1	SERVING GEOTHERMAL HEAT PUMP WATER SYSTEM. TANGENTIAL TYPE AIR SEPARATOR. 6-INCH INLET / OUTLET PIPE SIZE. 5 FT MAX WPD.	TACO ACT06	-
GEOTHERMAL WATER TREATMENT SYSTEM	SEE DETAIL 3/M-5.1		

WATER SOURCE HEAT PUMP UNIT SCHEDULE

UNIT DESIG	AREA SERVED	TYPE	SUPPLY AIRFLOW (CFM)	OUTDOOR AIRFLOW (CFM)	MIN ESP (IN WG)	COOLING CAPACITY (MBH) AT 85° EWT			HEATING CAPACITY (MBH) AT 49° EWT		GPM	MAX WPD (FT HD)	ELECTRICAL					MFR'S MODEL NO. (DAIKIN)	NOTES
						EAT (F) (DB/WB)	SENS MBH	TOTAL MBH	EAT (F)	HEATING CAPACITY			EC TYPE FAN MOTOR HP	MCA	MOP	COMPRESSOR TYPE	VOLTAGE/ PHASE		
HPU-01	VOCAL/CHORAL CLASSROOM B133	VERTICAL	1500	475	0.5	84/68	45.8	63.2	70	60.4	12.5	10	1	15.9	20	TWO-STAGE	460V - 3PH	WGTV0641	1,2,3,4,5,6,7,9,11
HPU-02	INSTRUMENTAL CLASSROOM B135	VERTICAL	1200	375	0.5	83/67	35.6	47.6	70	44.0	10.0	10	3/4	13.5	15	TWO-STAGE	460V - 3PH	WGTV0491	1,2,3,4,5,6,7,9,11
HPU-03	ART CLASSROOM C111	VERTICAL	1400	0	0.5	76/63	21.9	28.5	70	10.2	6.0	10	3/4	13.3	15	TWO-STAGE	460V - 3PH	WGTV0441	1,2,3,4,5,6,7,10
HPU-04	KINDERGARTEN C113	VERTICAL	1000	0	0.5	76/63	18.5	24.7	70	6.8	5.5	10	1/2	16.9	25	TWO-STAGE	277V - 1PH	WGTV0321	1,2,3,4,5,6,7,10
HPU-05	KINDERGARTEN C116	VERTICAL	1000	0	0.5	76/63	17.9	24.1	70	6.6	5.5	10	1/2	16.9	25	TWO-STAGE	277V - 1PH	WGTV0321	1,2,3,4,5,6,7,10
HPU-06	KINDERGARTEN C120	VERTICAL	1400	0	0.5	76/63	26.5	34.7	70	10.7	7.5	10	3/4	13.3	15	TWO-STAGE	460V - 3PH	WGTV0441	1,2,3,4,5,6,7,10
HPU-07	KINDERGARTEN C124	VERTICAL	1000	0	0.5	76/63	18.3	24.5	70	6.7	5.5	10	1/2	16.9	25	TWO-STAGE	277V - 1PH	WGTV0321	1,2,3,4,5,6,7,10
HPU-08	KINDERGARTEN C127	VERTICAL	1000	0	0.5	76/63	19.4	25.6	70	10.6	5.5	10	1/2	16.9	25	TWO-STAGE	277V - 1PH	WGTV0321	1,2,3,4,5,6,7,10
HPU-09	DIGITAL LEARNING AREA C101	VERTICAL	1090	0	0.5	76/63	21.3	27.5	70	0.0	7.5	10	1/2	11.2	15	TWO-STAGE	460V - 3PH	WGTV0381	1,2,3,4,5,6,7,10
HPU-10	PREKINDERGARTEN CLASSROOM C132	VERTICAL	700	0	0.5	76/63	14.0	20.2	70	2.4	5.0	10	1/3	14.0	20	TWO-STAGE	277V - 1PH	WGTV0261	1,2,3,4,5,6,7,10
HPU-11	MAKER SPACE C102	VERTICAL	700	0	0.5	76/63	14.5	20.7	70	0.0	5.0	10	1/3	14.0	20	TWO-STAGE	277V - 1PH	WGTV0261	1,2,3,4,5,6,7,10
HPU-12	PREKINDERGARTEN CLASSROOM C135	VERTICAL	875	0	0.5	76/63	17.0	23.2	70	5.0	5.0	10	1/2	16.9	25	TWO-STAGE	277V - 1PH	WGTV0321	1,2,3,4,5,6,7,10
HPU-13A	MEDIA C100	VERTICAL	1000	0	0.5	76/63	18.3	24.5	70	6.7	5.5	10	1/2	16.9	25	TWO-STAGE	277V - 1PH	WGTV0321	1,2,3,4,5,6,7,10
HPU-13B	MEDIA C100	VERTICAL	1000	0	0.5	76/63	18.3	24.5	70	6.7	5.5	10	1/2	16.9	25	TWO-STAGE	277V - 1PH	WGTV0321	1,2,3,4,5,6,7,10
HPU-14	PREKINDERGARTEN CLASSROOM C140	VERTICAL	700	0	0.5	76/63	14.1	20.3	70	2.6	5.0	10	1/3	14.0	20	TWO-STAGE	277V - 1PH	WGTV0261	1,2,3,4,5,6,7,10
HPU-15	FACULTY LOUNGE C162	VERTICAL	1000	0	0.5	76/63	18.5	24.1	70	4.2	5.5	10	1/2	16.9	25	TWO-STAGE	277V - 1PH	WGTV0321	1,2,3,4,5,6,7,10
HPU-16	ESOL RESOURCE ROOM C161	VERTICAL	1000	0	0.5	76/63	18.3	24.5	70	4.8	5.5	10	1/2	16.9	25	TWO-STAGE	277V - 1PH	WGTV0321	1,2,3,4,5,6,7,10
HPU-17	ENRICHMENT/REMEDIAL READING C159	VERTICAL	1000	0	0.5	76/63	18.4	24.6	70	5.1	5.5	10	1/2	16.9	25	TWO-STAGE	277V - 1PH	WGTV0321	1,2,3,4,5,6,7,10
HPU-18	CLASSROOM C156	VERTICAL	1000	0	0.5	76/63	19.6	27.0	70	4.5	6.0	10	1/2	16.9	25	TWO-STAGE	277V - 1PH	WGTV0321	1,2,3,4,5,6,7,10
HPU-19	CLASSROOM C152	VERTICAL	1250	0	0.5	76/63	23.6	30.0	70	8.2	6.5	10	1/2	11.2	15	TWO-STAGE	460V - 3PH	WGTV0381	1,2,3,4,5,6,7,10
HPU-20	CLASSROOM C149	VERTICAL	1090	0	0.5	76/63	21.0	28.4	70	4.9	6.0	10	1/2	11.2	15	TWO-STAGE	460V - 3PH	WGTV0381	1,2,3,4,5,6,7,10
HPU-21	CLASSROOM C147	VERTICAL	1090	0	0.5	76/63	21.0	28.4	70	4.9	6.0	10	1/2	11.2	15	TWO-STAGE	460V - 3PH	WGTV0381	1,2,3,4,5,6,7,10
HPU-22	CLASSROOM C144	VERTICAL	1000	0	0.5	76/63	18.9	25.1	70	7.1	5.5	10	1/2	16.9	25	TWO-STAGE	277V - 1PH	WGTV0321	1,2,3,4,5,6,7,10
HPU-23	CLASSROOM C216	VERTICAL	1000	0	0.5	76/63	18.4	25.8	70	7.5	5.5	10	1/2	16.9	25	TWO-STAGE	277V - 1PH	WGTV0321	1,2,3,4,5,6,7,10
HPU-24	CLASSROOM C218	VERTICAL	800	0	0.5	76/63	16.2	22.4	70	6.8	5.0	10	1/3	14.0	20	TWO-STAGE	277V - 1PH	WGTV0261	1,2,3,4,5,6,7,10
HPU-25	CLASSROOM C220	VERTICAL	800	0	0.5	76/63	16.5	22.7	70	7.1	5.0	10	1/3	14.0	20	TWO-STAGE	277V - 1PH	WGTV0261	1,2,3,4,5,6,7,10
HPU-26	CLASSROOM C222	VERTICAL	1000	0	0.5	76/63	18.0	25.4	70	6.4	5.5	10	1/2	16.9	25	TWO-STAGE	277V - 1PH	WGTV0321	1,2,3,4,5,6,7,10
HPU-27	CLASSROOM C224	VERTICAL	1000	0	0.5	76/63	19.6	25.8	70	10.4	6.5	10	1/2	16.9	25	TWO-STAGE	277V - 1PH	WGTV0321	1,2,3,4,5,6,7,10
HPU-28	CLASSROOM C226	VERTICAL	1000	0	0.5	76/63	19.0	26.4	70	7.1	5.5	10	1/2	16.9	25	TWO-STAGE	277V - 1PH	WGTV0321	1,2,3,4,5,6,7,10
HPU-29	CLASSROOM C228	VERTICAL	1000	0	0.5	76/63	19.2	26.6	70	7.3	6.0	10	1/2	16.9	25	TWO-STAGE	277V - 1PH	WGTV0321	1,2,3,4,5,6,7,10
HPU-30	CLASSROOM C230	VERTICAL	875	0	0.5	76/63	17.4	23.6	70	9.9	5.0	10	1/2	16.9	25	TWO-STAGE	277V - 1PH	WGTV0321	1,2,3,4,5,6,7,10
HPU-31	CLASSROOM C200	VERTICAL	700	0	0.5	76/63	13.8	20.0	70	3.2	5.0	10	1/3	14.0	20	TWO-STAGE	277V - 1PH	WGTV0261	1,2,3,4,5,6,7,10
HPU-32	CLASSROOM C232	VERTICAL	875	0	0.5	76/63	17.9	24.1	70	7.7	5.5	10	1/2	16.9	25	TWO-STAGE	277V - 1PH	WGTV0321	1,2,3,4,5,6,7,10
HPU-33	CLASSROOM C238	VERTICAL	1090	0	0.5	76/63	20.8	28.2	70	7.7	6.0	10	1/2	11.2	15	TWO-STAGE	460V - 3PH	WGTV0381	1,2,3,4,5,6,7,10
HPU-34	WORKROOM C207	VERTICAL	380	0	0.5	76/63	6.7	7.1	70	2.0	1.5	10	1/10	6.0	15	SINGLE-STAGE	277V - 1PH	WGSV0121	1,2,3,4,5,6,8,10
HPU-35	CLASSROOM C212	VERTICAL	800	0	0.5	76/63	15.1	19.7	70	2.4	5.0	10	1/3	14.0	20	TWO-STAGE	277V - 1PH	WGTV0261	1,2,3,4,5,6,7,10
HPU-36	CLASSROOM C215	VERTICAL	800	0	0.5	76/63	15.0	22.2	70	2.3	5.0	10	1/3	14.0	20	TWO-STAGE	277V - 1PH	WGTV0261	1,2,3,4,5,6,7,10
HPU-37	CLASSROOM C254	VERTICAL	1090	0	0.5	76/63	20.7	28.1	70	6.5	6.0	10	1/2	11.2	15	TWO-STAGE	460V - 3PH	WGTV0381	1,2,3,4,5,6,7,10
HPU-38	CLASSROOM C252	VERTICAL	1000	0	0.5	76/63	19.3	25.5	70	6.8	5.5	10	1/2	16.9	25	TWO-STAGE	277V - 1PH	WGTV0321	1,2,3,4,5,6,7,10
HPU-39	CLASSROOM C250	VERTICAL	1250	0	0.5	76/63	22.7	30.1	70	7.5	6.5	10	1/2	11.2	15	TWO-STAGE	460V - 3PH	WGTV0381	1,2,3,4,5,6,7,10
HPU-40	CLASSROOM C248	VERTICAL	1250	0	0.5	76/63	23.5	29.7	70	10.0	6.5	10	1/2	11.2	15	TWO-STAGE	460V - 3PH	WGTV0381	1,2,3,4,5,6,7,10
HPU-41	CLASSROOM C246	VERTICAL	1000	0	0.5	76/63	18.2	24.4	70	6.6	6.5	10	1/2	16.9	25	TWO-STAGE	277V - 1PH	WGTV0321	1,2,3,4,5,6,7,10
HPU-42	CLASSROOM C244	VERTICAL	1090	0	0.5	76/63	22.2	29.6	70	7.3	6.5	10	1/2	11.2	15	TWO-STAGE	460V - 3PH	WGTV0381	1,2,3,4,5,6,7,10
HPU-43	CLASSROOM C242	VERTICAL	1250	0	0.5	76/63	22.8	30.2	70	7.6	6.5	10	1/2	11.2	15	TWO-STAGE	460V - 3PH	WGTV0381	1,2,3,4,5,6,7,10
HPU-44	CLASSROOM C240	VERTICAL	1000	0	0.5	76/63	19.8	26.0	70	9.8	6.5	10	1/2	16.9	25	TWO-STAGE	277V - 1PH	WGTV0321	1,2,3,4,5,6,7,10
HPU-45	CONTROL ROOM / VIDEO PRODUCTION	VERTICAL	600	0	0.5	76/63	11.4	12.6	70	2.0	3.0	11	1/3	14	20	TWO-STAGE	277V - 1PH	WGTV0261	1,2,3,4,5,6,7,10
HPU-46	CORRIDOR C21	VERTICAL	1400	0	0.5	76/63	36.6	36.6	70	24.5	10.0	10	3/4	13.5	15	TWO-STAGE	460V - 3PH	WGTV0491	1,2,3,4,5,6,7,9,11

NOTES:

1. ALL VERTICAL UNITS SHALL BE TOP SUPPLY
2. UNIT SHALL MEET MINIMUM EFFICIENCY REQUIREMENTS OF ARI/ISO/ASHRAE/ANSI 13256-1 FOR WATER LOOP HEAT PUMPS.
3. PROVIDE REMOTE WALL-MOUNTED DISCONNECT (WITH PHASE PROTECTION IF APPLICABLE) IN LIEU OF INTEGRAL DISCONNECT SWITCH.
4. ACCESSORIES SHALL INCLUDE OVERFLOW SWITCH MOUNTED IN CONDENSATE DRAIN PAN. DEVICE SHALL BE FACTORY FURNISHED AND WIRED.
5. HEAT PUMP UNIT UTILIZING REFRIGERANT HCF-410A.
6. SCHEDULED EER AND COP VALUES LISTED ARE BASED ON SCHEDULED OPERATING CONDITIONS.
7. PROVIDE UNIT WITH 2-STAGE COMPRESSOR.
8. PROVIDE UNIT WITH SINGLE STAGE COMPRESSOR.
9. PROVIDE UNIT WITH HOT GAS REHEAT COIL SIZED FOR 55 °F EAT AND 72 °F LAT.
10. PROVIDE MANUFACTURERS STANDARD TEMPERATURE SENSOR WITHOUT DISPLAY AND WITH WARM/COOL SLIDE (EQUAL TO DAIKIN 1238-1).
11. PROVIDE TEMPERATURE SENSOR WITH DISPLAY (EQUAL TO DAIKIN 1171-7).

DUCTLESS SPLIT SYSTEM UNIT SCHEDULE

DESIG	AREA SERVED	UNIT TYPE	INDOOR UNIT						OUTDOOR UNIT							MODEL NO.'S (MITSUBISHI)		NOTES
			CFM	COOLING CAPACITY TOTAL MBH	HEATING CAPACITY MBH	MCA	MOP	VOLTAGE/ PHASE	REFRIG TYPE	TOTAL CAPACITY MBH	EAT (°F)	MCA	MOP	VOLTAGE/ PHASE	SEER	INDOOR	OUTDOOR	
DSS-1	WIRE CLOSET B138	WALL-MOUNTED	425	18.0	-	1	15	208V-1Ø	R-410A	18.0	95	13	20	208V-1Ø	15.3	PKA-A18	PUY-A18	1,2,3,5,6
DSS-2	EMR C256	WALL-MOUNTED	425	18.0	13.0	1	15	208V-1Ø	R-410A	18.0	95	13	20	208V-1Ø	15.3	PLA-A18	PUZ-A18	1,2,4,5,6
DSS-3	MDF/SERVER C105	WALL-MOUNTED	920	34.2	-	1	15	208V-1Ø	R-410A	34.2	95	25	40	208V-1Ø	14.0	PKA-A36	PUY-A18	1,2,3,5,6
DSS-4	WIRE CLOSET C205	WALL-MOUNTED	640	18.0	13.0	1	15	208V-1Ø	R-410A	18.0	95	13	20	208V-1Ø	14.2	PLA-A18	PUZ-A18	1,2,4,5,6
DSS-5	DRY STORAGE B120	WALL-MOUNTED	425	18.0	13.0	1	15	208V-1Ø	R-410A	18.0	95	13	20	208V-1Ø	15.3	PLA-A18	PUZ-A18	1,2,4,5,6
DSS-6	OFFICE C254	CEILING-MOUNTED	425	18.0	13.0	1	15	208V-1Ø	R-410A	18.0	95	13	20	208V-1Ø	15.3	PLA-A18	PUZ-A18	1,2,4,5,6
DSS-7	TV ROOM B142	CEILING-MOUNTED	425	18.0	13.0	1	15	208V-1Ø	R-410A	18.0	95	13	20	208V-1Ø	15.3	PLA-A18	PUZ-A18	1,2,4,5,6

NOTES:

1. INDOOR UNIT AIRFLOW BASED ON HIGH SPEED UNIT OPERATION.
2. PROVIDE LOW AMBIENT COOLING OPERATION DOWN TO 0 DEGREES F.
3. COOLING ONLY TYPE SYSTEM.
4. HEAT PUMP TYPE SYSTEM.
5. ELECTRICAL POWER CONNECTIONS FOR THE BASIS OF DESIGN UNIT REQUIRE THE INDOOR UNIT TO BE WIRED THRU THE OUTDOOR UNIT. OTHER MANUFACTURER'S MAY REQUIRE SEPARATE POWER CONNECTIONS, WHICH THE CONTRACTOR SHALL PROVIDE AS REQUIRED.
6. PROVIDE WITH MANUFACTURER'S STANDARD THROWAWAY FILTER RACK.

James Posey Associates
Engineering Your Vision
Mechanical & Electrical Engineers
jamesposey.com
tel 410-265-6100
fax 410-298-9820
3112 Lord Baltimore Drive
Baltimore, MD 21244

Professional Certification. I hereby certify that these documents were prepared or approved by me, and that I am a duly licensed professional engineer under the laws of the state of Maryland, License No. 33986, Expiration date: 01-16-2017.

STATE OF MARYLAND ★ MICHAEL PATRICK SHERREN ★ 33986 ★ PROFESSIONAL ENGINEER

JPA PROJECT NO. 6542-15

11720 Beltsville Drive
Suite 600
Calverton, MD 20705
Tel: 301.595.1000
www.grimmandparker.com
G+P GRIMM AND PARKER

GP #21541

SCHEDULES

LANSDOWNE ELEMENTARY SCHOOL
2301 ALMA ROAD, BALTIMORE, MD

DATE	DESCRIPTION
10/7/16	ADD NO. 1

M-6.3

11/17/16
BID SET

© 2016 James Posey Associates, Inc.

November 10, 2016 6:39 a.m.

© GRIMM AND PARKER, P.C. 2014

HVAC DUCT CONSTRUCTION SCHEDULE

DUCT PRESSURE CLASS REQUIREMENTS

SYSTEM	SMACNA DUCT PRESSURE CLASS (INCHES WC)						
	SUPPLY	RETURN		EXHAUST		OUTDOOR AIR	
	DISCHARGE	DISCHARGE	SUCTION	DISCHARGE	SUCTION	DISCHARGE	SUCTION
DEDICATED OUTDOOR AIR SYSTEM UNITS (DOAS)	2.0	-	-	-	2.0	-	-
ENERGY RECOVERY UNITS (ERU)	2.0	-	2.0	2.0	-	-	2.0
HEAT PUMP UNITS (HPU)	2.0	-	2.0	-	-	-	2.0
EXHAUST AND RETURN FANS (EF)	-	-	-	2.0	2.0	-	-

GENERAL:

A. MIXED AIR DUCTS (RA & OA) AND INLET PLENUMS SHALL BE CONSTRUCTED SAME AS RETURN DUCTS.
B. PRESSURE RELIEF AND TRANSFER DUCTS SHALL BE CONSTRUCTED PER SMACNA 1.0 INCH PRESSURE CLASS.
C. PROVIDE DUCT JOINT TYPES WHICH ASSURE COMPLIANCE WITH THE ASSOCIATED LEAKAGE FACTOR SCHEDULED BELOW.

MINIMUM RECTANGULAR DUCT CONSTRUCTION REQUIREMENTS

2.0 INCHES WC STATIC (POSITIVE OR NEGATIVE)			3.0 INCHES WC STATIC (POSITIVE OR NEGATIVE)			4.0 INCHES WC STATIC (POSITIVE)		
DUCT DIMENSION (INCHES)	MINIMUM STEEL GAGE	MAXIMUM REINFORCEMENT SPACING (FEET)	DUCT DIMENSION (INCHES)	MINIMUM STEEL GAGE	MAXIMUM REINFORCEMENT SPACING (FEET)	DUCT DIMENSION (INCHES)	MINIMUM STEEL GAGE	MAXIMUM REINFORCEMENT SPACING (FEET)
12 DOWN	24	NONE	18 DOWN	24	5.0	18 DOWN	24	5.0
13-30	24	5.0	19-28	22	5.0	19-28	22	5.0
31-36	22	5.0	29-48	22	2.5	29-42	22	2.5
37-48	20	5.0	49-72	20	2.5	43-60	20	2.5
49-84	20	2.5	73-84	18	2.5	61-72	18	2.5
85 UP	18	2.5	85 UP	16	2.5	73 UP	16	2.5

6.0 INCHES WC STATIC (POSITIVE)		
DUCT DIMENSION (INCHES)	MINIMUM STEEL GAGE	MAXIMUM REINFORCEMENT SPACING (FEET)
12 DOWN	24	5.0
13-22	22	5.0
23-30	22	2.5
31-48	20	2.5
49-60	18	2.5
61-72	16	2.5
73 UP	16	1.67

DUCT AIR LEAKAGE REQUIREMENTS

PRESSURE CLASS (INCHES WC)	LEAKAGE CLASS	TEST PRESS (INCHES WC)	LEAKAGE FACTOR (NOTE 1)
2.0	6	2.0	10
3.0	6	3.0	13
4.0	3	4.0	8
6.0	3	6.0	10

NOTES:

1. DUCT LEAKAGE FACTOR (CFM/100 SQ FT OF DUCT SURFACE AREA). MAXIMUM LEAKAGE RATE AT TEST PRESSURE.

GENERAL:

- THE LEAKAGE REQUIREMENTS SCHEDULED ABOVE ARE FOR STANDARD HVAC APPLICATIONS. FOR DUCT SYSTEMS REQUIRING WELDED JOINTS, THE LEAKAGE FACTOR SHALL BE 0.
- PROVIDE JOINT TYPES AND SEALING METHODS AS REQUIRED TO COMPLY WITH THE LEAKAGE FACTOR INDICATED ON THIS SCHEDULE.
- UNLESS OTHERWISE NOTED ABOVE, LEAK TEST ALL DUCTS. LEAKAGE RATES SHALL NOT EXCEED LEAKAGE FACTORS INDICATED ON THIS SCHEDULE FOR THE APPLICABLE PRESSURE CLASSES.

VARIABLE REFRIGERANT SYSTEM SCHEDULE (VRT)

UNIT DESIG	AREA SERVED	CFM	ESP	COOLING MIN SENS MBH	COOLING MIN TOTAL MBH	EAT (DB/RH)	HEATING CAPACITY MBH	EAT (WINTER)	MCA	MOP (AMPS)	VOLTAGE / PHASE	REFRIG. TYPE	MODEL NO. (DAIKIN AC)	WATER-COOLED CONDENSING UNIT CONNECTION	NOTES
VRT-1	PE INSTRUCTOR OFFICE B131	320	0	2.1	2.5	76 / 50%	0.5	70.0	0.8	15	208V-1Ø	R-410A	FXZQ07MVJU9	WCCU-1	1,2,3,4
VRT-2	BUILDING SERVICES OFFICE B108	320	0	3.1	3.5	76 / 50%	1.9	70.0	0.8	15	208V-1Ø	R-410A	FXZQ07MVJU9	WCCU-1	1,2,3,4
VRT-3	OT/PT B105	320	0	3.2	3.6	76 / 50%	2.4	70.0	0.8	15	208V-1Ø	R-410A	FXZQ07MVJU9	WCCU-1	1,2,3,4
VRT-4	GUIDANCE A112	320	0	2.5	3.3	76 / 50%	0.5	70.0	0.8	15	208V-1Ø	R-410A	FXZQ07MVJU9	WCCU-1	1,2,3,4
VRT-5	GUIDANCE OFFICE A113	320	0	1.5	1.9	76 / 50%	0.4	70.0	0.8	15	208V-1Ø	R-410A	FXZQ07MVJU9	WCCU-1	1,2,3,4
VRT-6	RESTING AREA A 122	320	0	2.4	3.4	76 / 50%	1.2	70.0	0.8	15	208V-1Ø	R-410A	FXZQ07MVJU9	WCCU-1	1,2,3,4
VRT-7	TREATMENT/MEDICATION A120	320	0	2.4	3.1	76 / 50%	0.6	70.0	0.8	15	208V-1Ø	R-410A	FXZQ07MVJU9	WCCU-1	1,2,3,4
VRT-8	WAITING AREA A124	320	0	1.8	2.6	76 / 50%	0.3	70.0	0.8	15	208V-1Ø	R-410A	FXZQ07MVJU9	WCCU-1	1,2,3,4
VRT-9	EXAMINATION A123	320	0	1.4	1.8	76 / 50%	0.4	70.0	0.8	15	208V-1Ø	R-410A	FXZQ07MVJU9	WCCU-1	1,2,3,4
VRT-10	WAITING AREA A100	320	0	5.2	6.8	76 / 50%	1.5	70.0	0.8	15	208V-1Ø	R-410A	FXZQ09MVJU9	WCCU-1	1,2,3,4
VRT-11	SW/PSYCH OFFICE A111	320	0	3.2	3.6	76 / 50%	1.8	70.0	0.8	15	208V-1Ø	R-410A	FXZQ07MVJU9	WCCU-1	1,2,3,4
VRT-12	SW/PSYCH OFFICE A110	320	0	3.6	4.0	76 / 50%	2.0	70.0	0.8	15	208V-1Ø	R-410A	FXZQ07MVJU9	WCCU-1	1,2,3,4
VRT-13	ASSISTANCE PRINCIPAL A109	320	0	2.9	3.3	76 / 50%	1.7	70.0	0.8	15	208V-1Ø	R-410A	FXZQ07MVJU9	WCCU-1	1,2,3,4
VRT-14	WORK RECORDS A106	320	0	5.7	6.1	76 / 50%	5.0	70.0	0.8	15	208V-1Ø	R-410A	FXZQ09MVJU9	WCCU-1	1,2,3,4
VRT-15	PRINCIPAL A105	320	0	5.0	5.4	76 / 50%	3.0	70.0	0.8	15	208V-1Ø	R-410A	FXZQ07MVJU9	WCCU-1	1,2,3,4
VRT-16	CONFERENCE A104	777	0	12.8	16.4	76 / 50%	4.3	70.0	0.7	15	208V-1Ø	R-410A	FXFQ24TVJU	WCCU-1	1,2,3,4
VRT-17	ASSISTANT PRINCIPAL A103	320	0	5.7	6.1	76 / 50%	5.0	70.0	0.8	15	208V-1Ø	R-410A	FXZQ09MVJU9	WCCU-1	1,2,3,4
VRT-18	LIBRARIAN OFFICE C109	320	0	2.5	2.9	76 / 50%	0.0	70.0	0.8	15	208V-1Ø	R-410A	FXZQ07MVJU9	WCCU-1	1,2,3,4
VRT-19	RESOURCE C110	320	0	2.5	2.9	76 / 50%	0.0	70.0	0.8	15	208V-1Ø	R-410A	FXZQ07MVJU9	WCCU-1	1,2,3,4
VRT-20	COLLABORATIVE LEARNING C130	560	0.3	9.0	9.0	76 / 50%	0.0	70.0	1.5	15	208V-1Ø	R-410A	FXMQ15PBVJU	WCCU-2	2,3,4,5
VRT-21	COLLABORATIVE LEARNING C143	1100	0.3	17.0	17.0	76 / 50%	0.0	70.0	2.8	15	208V-1Ø	R-410A	FXMQ30PBVJU	WCCU-2	2,3,4,5
VRT-22	COLLABORATIVE LEARNING C231	690	0.3	14.5	14.5	76 / 50%	0.0	70.0	1.8	15	208V-1Ø	R-410A	FXMQ24PBVJU	WCCU-2	2,3,4,5
VRT-23	COLLABORATIVE LEARNING C239	640	0.3	11.3	11.3	76 / 50%	0.0	70.0	1.6	15	208V-1Ø	R-410A	FXMQ18PBVJU	WCCU-2	2,3,4,5

NOTES

1. RECESSED, CEILING-MOUNTED UNIT COMPLETE WITH INTEGRAL CONDENSATE PUMP, WASHABLE FILTER, INTEGRAL CEILING PANEL, AND REMOTE SENSOR KIT.
2. UNIT SELECTED AT LOW SPEED.
3. PROVIDE BRANCH SELECTOR UNIT FOR INDEPENDENT, SIMULTANEOUS HEATING AND COOLING OPERATION OF EACH UNIT.
4. ENTIRE SYSTEM (INCLUDING REFRIGERANT PIPING) SHALL BE INSTALLED BY A CERTIFIED MANUFACTURER'S REPRESENTATIVE.
5. CONCEALED, DUCTED UNIT COMPLETE WITH INTEGRAL CONDENSATE PUMP, WASHABLE FILTER, AND REMOTE SENSOR KIT.

WATER COOLED VARIABLE REFRIGERANT CONDENSING UNIT SCHEDULE

DESIG	UNITS SERVED	SYSTEM COOLING CAPACITY (MBH)	SYSTEM FULL LOAD EER	SYSTEM HEATING CAPACTIY (MBH)	SYSTEM FULL LOAD COP	TOTAL SYSTEM GPM	REFRIGERANT	MODEL NO. (DAIKIN AC)	VOLTAGE/ PHASE	MCA (PER UNIT)	MOP (PER UNIT)	NOTES
WCCU-1	ADMIN AREA	133.5	14.4	163.5	4.97	36	R-410A	RWEYQ144PCYD	480V-3Ø	10.2	15	1,2,3,4
WCCU-2	COLLABORATIVE LEARNING	74,4	14	81.9	4.89	18	R-410A	RWEYQ72PCYD	480V-3Ø	10.2	15	1,2,3

NOTES:

1. PROVIDE VARIABLE REFRIGERANT FLOW OPERATION, INCLUDING MANUFACTUER'S BRANCH PIPING KIT, CONTROLLERS, PANELS, ACCESSORIES, AND COMPLETE PACKAGED CONTROL SYSTEM WITH BACNET PROTOCOL. SYSTEM SHALL BE CAPABLE OF CONTROL AND MONITORING INTERFACE WITH BUILDING DDC SYSTEM, THROUGH BACNET INTERFACE.
2. COOLING CAPACITY SELECTED AT 85 F ENTERING WATER TEMPERATURE.
3. HEATING CAPACITY SELECTED AT 49 F ENTERING WATER TEMPERATURE.
4. SYSTEM IS COMPRISED OF TWO UNITS. SEE DIAGRAM 8/M-5.2 FOR PIPING AND MOUNTING REQUIREMENTS.

James Posey Associates
Engineering Your Vision
Mechanical & Electrical Engineers
jamesposey.com
3112 Lord Baltimore Drive
Baltimore, MD 21244
tel 410-265-6100
fax 410-298-9820

Professional Certification. I hereby certify that these documents were prepared or approved by me, and that I am a duly licensed professional engineer under the laws of the state of Maryland License No. 33986. Expiration date: 01-16-2017.

STATE OF MARYLAND REGISTERED PROFESSIONAL ENGINEER MICHAEL J. SHERREN 33986

JPA PROJECT NO. 6542-15

11720 Beltsville Drive
Suite 600
Calverton, MD 20705
Tel: 301.595.1000
www.grimmandparker.com
G+P GRIMM AND PARKER

GP #21541

SCHEDULES

LANSDOWNE ELEMENTARY SCHOOL
2301 ALMA ROAD, BALTIMORE, MD

DATE	DESCRIPTION

M-6.4

11/17/16
BID SET

November 10, 2016 6:39 p.m.
Drawing: Y:\6542-15\5-Drawings\6542M6.dwg BKOHANEC

© 2016 James Posey Associates, Inc.

© GRIMM AND PARKER, P.C. 2014

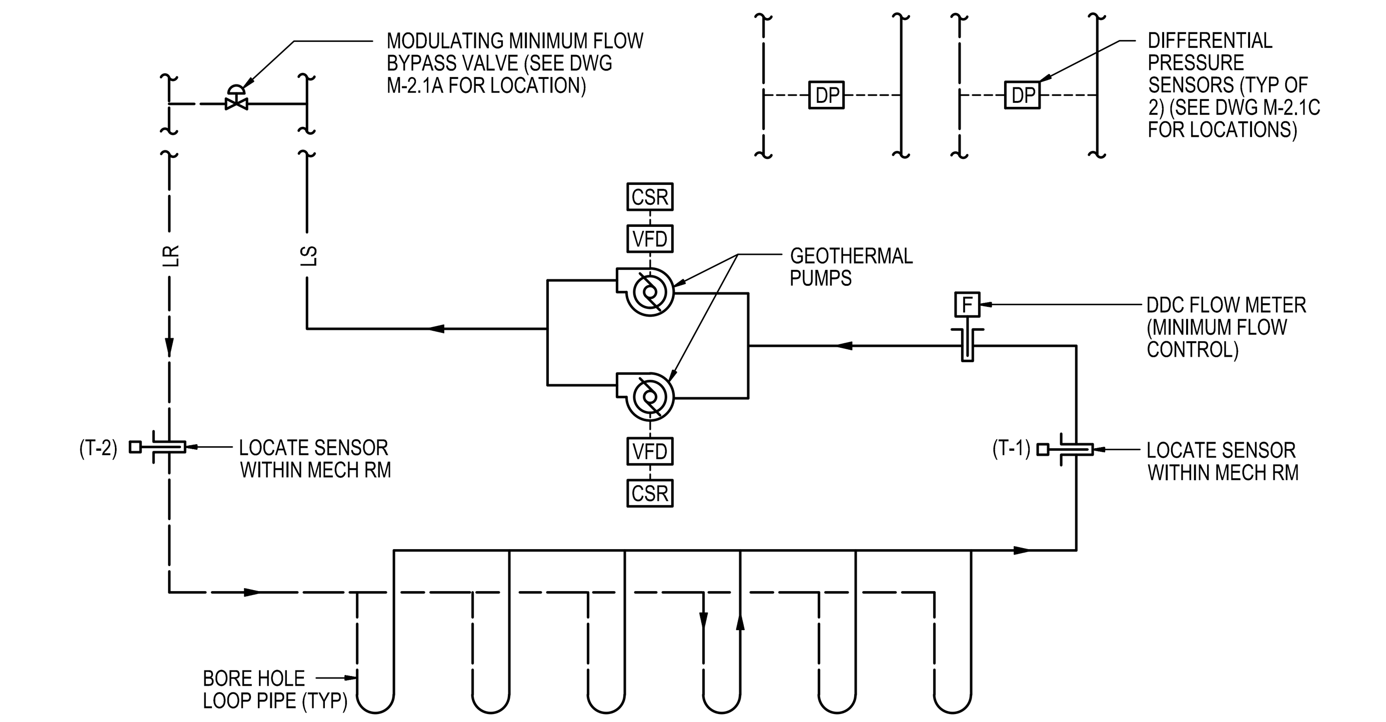

GEOTHERMAL PUMPING SYSTEM

(PUMPS P-1 AND P-2)

A. OPERATION:

1. WHEN CALLED TO OPERATION THOUGH THE DDC SYSTEM, THE LEAD GEOTHERMAL PUMP SHALL BE ENERGIZED THROUGH THE DDC SYSTEM AND RUN CONTINUOUSLY.
2. PROVIDE THE ABILITY TO MANUALLY ENERGIZE AND DEENERGIZE PUMPS THROUGH THE DDC SYSTEM.
3. LEAD PUMP VFD SHALL MODULATE ITS PUMP MOTOR SPEED TO MAINTAIN THE SETPOINT OF THE REMOTE DIFFERENTIAL PRESSURE SENSOR WITH THE GREATEST DEMAND (LARGEST DEVIATION FROM IT'S SETPOINT VALUE), BASED ON A 5 MINUTE AVERAGE (ADJUSTABLE) SYSTEM READING. DIFFERENTIAL PRESSURE SENSORS SETPOINT SHALL BE DETERMINED DURING BALANCING AND SHALL NOT EXCEED 12 PSI AT EACH SENSOR.
4. UPON LOSS OF FLOW THROUGH THE LEAD PUMP FOR MORE THAN 5 SECONDS WHEN CONTROLS REQUIRE ITS OPERATION, AS SENSED BY ITS CURRENT SENSING RELAY, THE LAG PUMP SHALL BE ENERGIZED AND OPERATE SAME AS DESCRIBED FOR THE LEAD PUMP. PUMP FAILURE SHALL INITIATE AN ALARM TO THE DDC SYSTEM INDICATING THE SPECIFIC ALARM CONDITION.
5. DDC SYSTEM SHALL ALTERNATE LEAD AND LAG PUMP OPERATION EVERY 30 DAYS. LEAD PUMP SHALL BE SELECTED BASED ON THE PUMPING SYSTEM WITH THE FEWEST HOURS OF OPERATION, AS DETERMINED THROUGH DDC SYSTEMS RUNTIME REGISTER. PRIOR TO PERFORMING LEAD / LAG ROTATION, LAG PUMP SHALL BE ENERGIZED FOR 90 SECONDS (ADJUSTABLE) PRIOR TO DEENERGIZING LEAD PUMP, AVOIDING LOSS OF FLOW WITHIN THE GEOTHERMAL DISTRIBUTION LOOP.
6. PUMP AND VFD FAILURES SHALL BE ALARMED THROUGH THE DDC SYSTEM.
7. MINIMUM FLOW BYPASS VALVE SHALL MODULATE TO MAINTAIN THE MINIMUM FLOW SETPOINT OF THE DDC FLOW METER (100 GPM; ADJUSTABLE). VALVE SHALL REMAIN CLOSED WHEN THE SYSTEM FLOW RATE EXCEEDS THE MINIMUM FLOW SETPOINT.

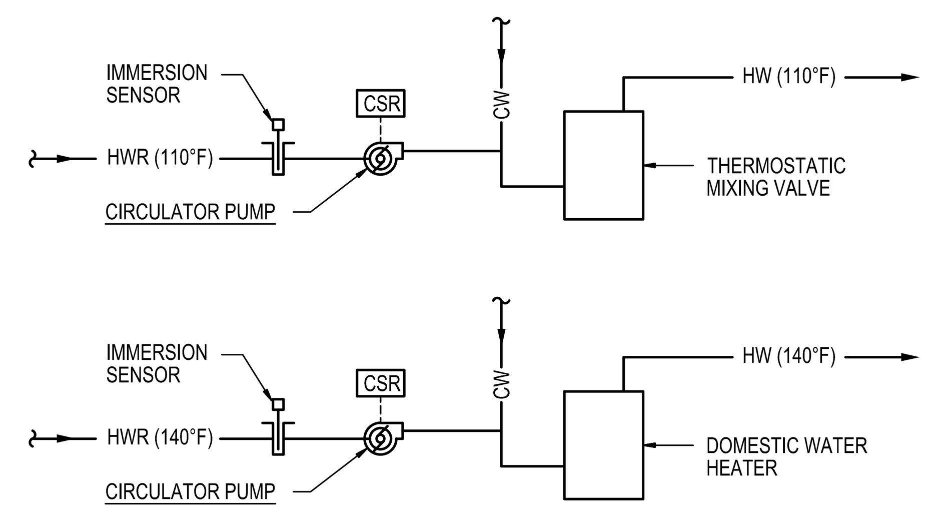

DOMESTIC HOT WATER CIRCULATOR PUMPS

(BOTH 110°F AND 140°F LOOPS)

A. OCCUPIED CYCLE:

1. WHEN THE CIRCULATOR PUMPS ASSOCIATED CONTROL ZONE IS INDEXED TO OCCUPIED, CIRCULATOR PUMP SHALL BE ENABLED FOR OPERATION. ONCE ENABLED, THE CIRCULATOR PUMP SHALL OPERATE AS FOLLOWS:

110 F HOT WATER LOOP PUMP:

a. CIRCULATOR PUMP SHALL BE ENERGIZED WHEN HEATING WATER RETURN TEMPERATURE FALLS BELOW 100 DEGREES F.
b. CIRCULATOR PUMP SHALL BE DEENERGIZED WHEN HEATING WATER RETURN TEMPERATURE RISES ABOVE 105 DEGREES F.

140 F HOT WATER LOOP PUMP:

a. CIRCULATOR PUMP SHALL BE ENERGIZED WHEN HEATING WATER RETURN TEMPERATURE FALLS BELOW 130 DEGREES F.
b. CIRCULATOR PUMP SHALL BE DEENERGIZED WHEN HEATING WATER RETURN TEMPERATURE RISES ABOVE 135 DEGREES F.

B. UNOCCUPIED CYCLE:

1. WHEN THE CIRCULATOR PUMPS ASSOCIATED CONTROL ZONE IS INDEXED TO UNOCCUPIED, THE CIRCULATOR PUMP SHALL BE DEENERGIZED.

ATC SYSTEM GENERAL NOTES

1. THE DDC SYSTEM SHALL CONSIST OF A WEB-BASED ENERGY MANAGEMENT SYSTEM, COMPLETE WITH BACNET PROTOCOL. THE SYSTEM SHALL USE AN ETHERNET OR WEB BASED COMMUNICATION SYSTEM WITH REMOTE DESKTOP/NETBOOK CONNECTION TO THE SERVER. AN ETHERNET CONNECTION SHALL BE INSTALLED AT THE SCHOOL AND ACTIVATED TO ALLOW THIS COMMUNICATION. A DELL DESKTOP SHALL BE PROVIDED AT THE SCHOOL WITH THE SYSTEM SOFTWARE LOADED. THE SOFTWARE SHALL ALSO BE LOADED ON THE COMPUTER AT THE CENTRAL REPORTING STATION AT THE BCPS PULASKI FACILITY. THE SOFTWARE SHALL BE LOADED ON THE NOTEBOOKS FOR THE BUILDING AUTOMATION TECHNICIANS. ONE LICENSE SHALL BE INCLUDED IN THE COST OF THE BUILDING AUTOMATION SYSTEM. THE SYSTEM SHALL BE WEB BASED AND INTERNET CAPABLE WITH REMOTE ACCESS CAPABILITY. PROVIDE A COPY OF THE SYSTEM SOFTWARE FOR FUTURE INSTALLATION SHOULD THE PROGRAM FAIL AND NEED TO BE REINSTALLED AT THE BCPS PULASKI FACILITY. REFER TO PROJECT SPECIFICATIONS FOR ADDITIONAL SYSTEM REQUIREMENTS AND ACCEPTABLE DDC SYSTEM MANUFACTURERS.
2. UNLESS OTHERWISE INDICATED, OCCUPIED HEATING SETPOINT SHALL BE 70 DEGREES F, OCCUPIED COOLING SETPOINT SHALL BE 76 DEGREES F, AND UNOCCUPIED HEATING SETPOINT SHALL BE 55 DEGREES F.
3. UNLESS OTHERWISE INDICATED, PROVIDE DDC CONTROLS.
4. POINT SCHEDULES INCLUDE LINES FOR DEVICE TYPES WHICH MAY HAVE MULTIPLE OCCURRENCES FOR A SINGLE UNIT. SEE PLANS FOR QUANTITIES.
5. THE CONTRACTOR SHALL BE RESPONSIBLE FOR INSTALLING AND WIRING ALL CONTROL EQUIPMENT SUPPLIED WITH HVAC SYSTEMS AND COMPONENTS AND FOR PROVIDING POWER CIRCUITS FOR THESE CONTROL SYSTEMS. CONTRACTOR SHALL ALSO PROVIDE ANY ANCILLARY COMPONENTS INCLUDING BUT NOT LIMITED TO SWITCHES, RELAYS, WIRING, AND CONDUIT TO ACCOMPLISH INTENDED CONTROL FUNCTIONS AND/OR CONTROL SEQUENCE NOTED IN THE SPECIFICATIONS.
6. FUNCTION OF CONTROLS SHALL BE RESTORED TO NORMAL OPERATION WHEN SAFETIES ARE RESET OR WHEN POWER IS RESTORED AFTER AN OUTAGE. EMERGENCY FAN DISCONNECT TRIPPING SHALL BE RESET WHEN THE DISCONNECT SWITCH IS RESET. SMOKE DETECTOR TRIPPING SHALL BE RESET WHEN THE ALARM IS NO LONGER PRESENT IN THE FIRE ALARM SYSTEM.
7. ALL SETPOINTS SHALL BE ADJUSTABLE.
8. WHERE VALVE POSITION AND DAMPER POSITION ARE INDICATED, HARDWARE FEEDBACK IS REQUIRED. A CALCULATION OF ANTICIPATED POSITION IS NOT ACCEPTABLE.
9. WHERE EMERGENCY SWITCH POINT IS INDICATED, A SOFTWARE INPUT IS REQUIRED MONITORING THE EMERGENCY FAN DISCONNECT SWITCH STATUS SO THAT A SYSTEM USER WOULD BE ABLE TO DIAGNOSE THE CAUSE OF THE SHUT DOWN.
10. WHERE SMOKE DETECTOR POINT IS INDICATED, HARD WIRING OF SHUT DOWN IS REQUIRED AS INDICATED ABOVE. ADDITIONALLY, A SOFTWARE INPUT IS REQUIRED MONITORING THE SMOKE DETECTOR STATUS SO THAT A SYSTEM USER WOULD BE ABLE TO DIAGNOSE THE CAUSE OF THE SHUT DOWN.
11. AUTOMATIC TEMPERATURE CONTROL SYSTEM INTERFACES WITH PACKAGED EQUIPMENT CONTROLS VIA A BACNET COMMUNICATION PROTOCOL. POINT SCHEDULES INDICATE SOME POINTS REQUIRED TO PASS BETWEEN AUTOMATIC TEMPERATURE CONTROL SYSTEM AND PACKAGED CONTROLS TO MAKE THE SEQUENCE OF OPERATION FUNCTION. PROVIDE GRAPHICS AFFILIATED WITH THESE POINTS. IN ADDITION TO THOSE POINTS LISTED IN THE POINT SCHEDULE, PROVIDE COMMUNICATION OF ALL POINTS AVAILABLE FROM THE PACKAGED CONTROL WHETHER LISTED OR NOT. THESE POINTS DO NOT REQUIRE GRAPHICS, BUT ARE REQUIRED TO BE ABLE TO BE OBSERVED, TRENDED, AND (WHERE APPLICABLE TO SET POINTS) ALTERED BY THE AUTOMATIC TEMPERATURE CONTROL SYSTEM. THESE POINTS SHALL INCLUDE, BUT NOT BE LIMITED TO, THE STATUS OF SPECIFIC ALARMS, FAN CFM, OA CFM, VFD SPEEDS, FIXED AND CALCULATED SET POINTS. PROVIDE LOGICAL POINT NAMES FOR THESE POINTS SO THEY CAN BE IDENTIFIED.

ATC SYMBOLS AND ABBREVIATIONS

(symbol)	ROOM TEMPERATURE SENSOR
(symbol)	FAN
(symbol)	PUMP
(symbol)	PATH OF AIRFLOW
(symbol)	DAMPER AND DAMPER OPERATOR; (OA) OUTSIDE AIR, (RA) RETURN AIR, (EA) EXHAUST AIR, (PR) PRESSURE RELIEF
S	SMOKE DAMPER AND DAMPER OPERATOR
(symbol)	AIR INSERTION TEMPERATURE OR HUMIDITY SENSOR
F	FREEZESTAT
CSR	CURRENT SENSING RELAY
(symbol)	2-WAY CONTROL VALVE
H	HUMIDITY SENSOR
CO_2	CARBON DIOXIDE SENSOR
(symbol)	IMMERSION TEMPERATURE SENSOR
F	DDC FLOW METER
(symbol)	OUTDOOR AIR INSERTION TEMPERATURE SENSOR WITH SUN SHIELD
T	SURFACE MOUNTED TEMPERATURE SENSOR
DP	DIFFERENTIAL PRESSURE SENSOR
(symbol)	MOTOR
H/C	H/G: HOT GAS REHEAT COIL, D/X: DIRECT EXPANSION COIL
E	EMERGENCY FAN DISCONNECT SWITCH
SD	AIR DUCT SMOKE DETECTOR
SPS	DUCT STATIC PRESSURE SENSOR, (HL) HIGH LIMIT, (LL) LOW LIMIT
DOAS	DEDICATED OUTDOOR AIR SYSTEM
EA	EXHAUST AIR
EF	EXHAUST FAN
ERU	ENERGY RECOVERY UNIT
HPU	HEAT PUMP UNIT
NC	NORMALLY CLOSED
NO	NORMALLY OPEN
OA	OUTDOOR AIR
PR	PRESSURE RELIEF
RA	RETURN AIR
RF	RETURN FAN
SA	SUPPLY AIR
SF	SUPPLY FAN

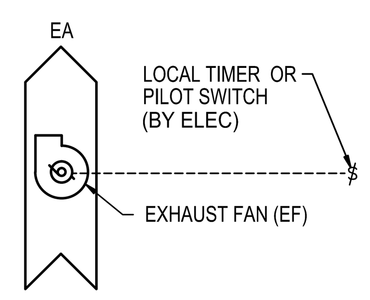

EXHAUST FAN WITH LOCAL TIMER OR PILOT SWITCH

(FAN SCHEDULE SEQUENCES E AND F)

A. OPERATION:

1. FAN SHALL START WHEN SWITCH IS SET TO ON.
2. FAN SHALL STOP WHEN SWITCH IS SET TO OFF.

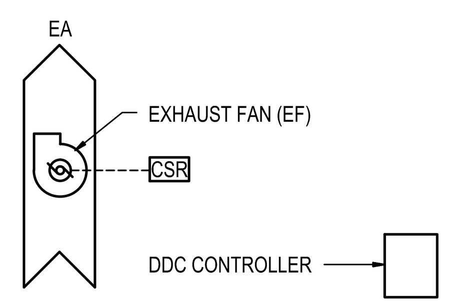

EXHAUST FAN WITH OCCUPIED/UNOCCUPIED CONTROL

(FAN SCHEDULE SEQUENCE C)

A. OPERATION - OCCUPIED:

1. WHENEVER THE SYSTEM IS IN "OCCUPIED" MODE, EF SHALL OPERATE CONTINUOUSLY.

B. OPERATION - UNOCCUPIED OR MORNING WARM-UP:

1. EF SHALL BE DEENERGIZED WHENEVER THE SYSTEM IS IN "UNOCCUPIED" OR "WARM-UP" MODES.

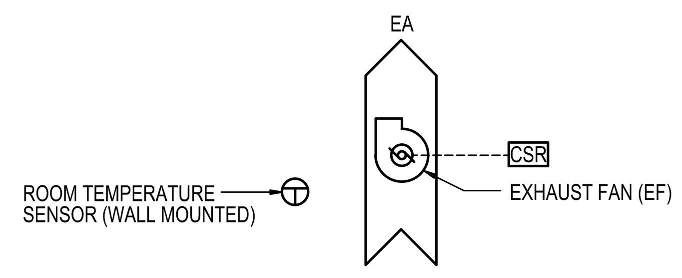

EXHAUST FAN WITH ROOM TEMPERATURE SENSOR CONTROL

(FAN SCHEDULE SEQUENCE B)

A. OPERATION:

1. ON A RISE IN TEMPERATURE ABOVE THE ROOM SENSOR SETPOINT, THE EF MOTOR SHALL BE ENERGIZED.
2. SEQUENCE SHALL REVERSE UPON A FALL IN TEMPERATURE AS SENSED BY THE ROOM SENSOR.

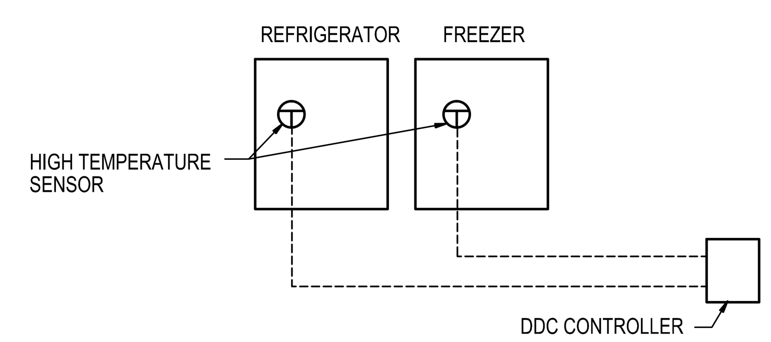

HIGH TEMPERATURE REFRIGERATOR/FREEZER ALARM

A. OPERATION:

1. WHENEVER THE SETPOINT OF THE HIGH TEMPERATURE SENSOR IN THE REFRIGERATOR OR THE FREEZER IS EXCEEDED, THE ALARM REPORTING DEVICE OF THE DDC SYSTEM SHALL BE ACTIVATED.
2. ALARM REPORTING DEVICE SHALL NOTIFY SCHOOL PERSONNEL OF CONDITION.

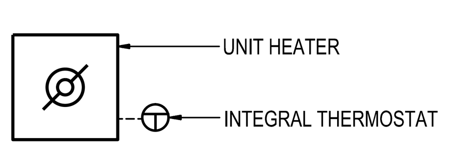

ELECTRIC UNIT HEATER CABINET AND PROPELLER STYLES

A. OPERATION:

1. UNIT HEATER FAN MOTOR AND ELECTRIC HEATING ELEMENT SHALL BE ENERGIZED ON A FALL IN TEMPERATURE BELOW THE INTEGRAL THERMOSTAT SETPOINT.
2. UNIT HEATER FAN MOTOR AND ELECTRIC HEATING ELEMENT SHALL BE DEENERGIZED ON A FALL IN TEMPERATURE BELOW THE INTEGRAL THERMOSTAT SETPOINT.

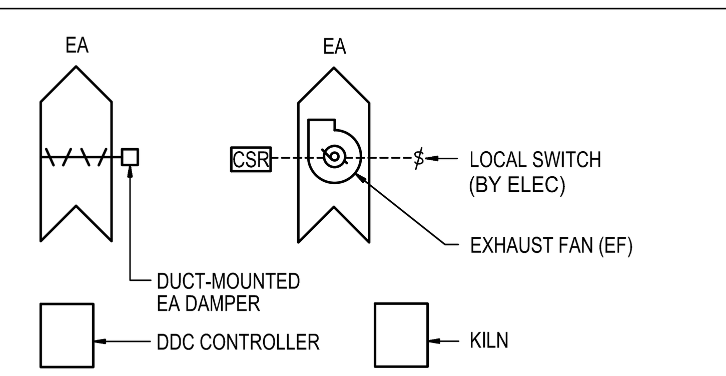

KILN EXHAUST FAN

(FAN SCHEDULE SEQUENCE D)

A. GENERAL:

1. PROVIDE CONTROL INTERFACE WITH KILN EQUIPMENT FOR MONITORING AND CONTROL FUNCTIONS DESCRIBED BELOW.

B. OPERATION - KILN NOT IN OPERATION:

1. FAN SHALL BE CONTROLLED VIA LOCAL SWITCH WHEN KILN IS NOT IN OPERATION.
2. FAN SHALL START AND DUCT-MOUNTED EA DAMPER SHALL CLOSE WHEN SWITCH IS SET TO ON.
3. FAN SHALL STOP AND DUCT-MOUNTED EA DAMPER SHALL OPEN WHEN SWITCH IS SET TO OFF.

C OPERATION - KILN IN OPERATION:

1. FAN SHALL BE CONTROLLED INDEPENDENT OF LOCAL SWITCH WHEN KILN IS IN OPERATION.
2. FAN SHALL BE ENERGIZED AND OPERATE UNTIL INTERNAL KILN TEMPERATURE REACHES 1000 DEGREES F. DUCT-MOUNTED EA DAMPER SHALL BE CLOSED WHEN EXHAUST FAN IS IN OPERATION.

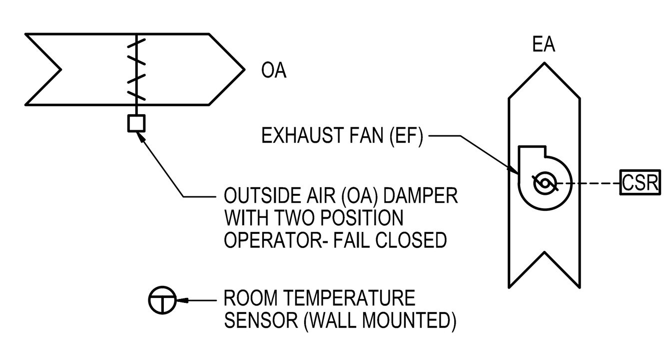

EXHAUST FAN WITH ROOM TEMPERATURE SENSOR CONTROL (WITH COMPANION DAMPER)

(FAN SCHEDULE SEQUENCE A)

A. OPERATION:

1. ON A RISE IN TEMPERATURE ABOVE THE ROOM SENSOR SETPOINT, THE OA DAMPER SHALL OPEN.
2. ONCE THE THE OA DAMPER HAS BEEN PROVEN OPEN, EF MOTOR SHALL BE ENERGIZED.
3. SEQUENCE SHALL REVERSE UPON A FALL IN TEMPERATURE AS SENSED BY THE ROOM SENSOR.

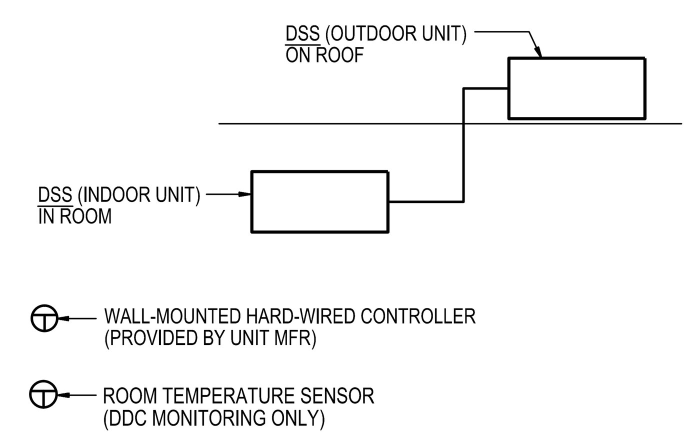

DUCTLESS SPLIT SYSTEM UNITS

THE DUCTLESS SPLIT SYSTEM UNITS ARE TO BE FURNISHED WITH ALL NECESSARY CONTROLS. THE CONTRACTOR SHALL BE RESPONSIBLE FOR INSTALLING AND WIRING ALL CONTROLS FURNISHED WITH SYSTEM. CONTRACTOR SHALL ALSO PROVIDE ANY SWITCHES AND RELAYS TO ACCOMPLISH THE EQUIPMENT MANUFACTURER'S REQUIRED CONTROL SEQUENCE

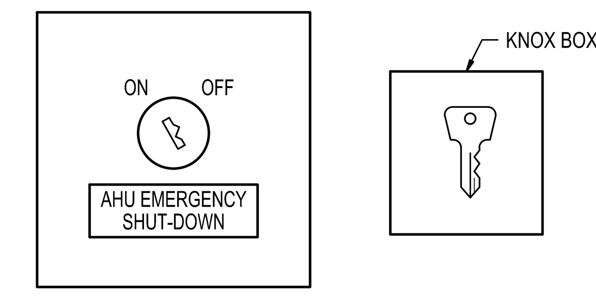

NOTE:

PROVIDE A SINGLE SWITCH TO SHUT DOWN ALL EQUIPMENT INDICATED WITH "E" IN THE CONTROL SEQUENCE

EMERGENCY FAN DISCONNECT SWITCH DETAIL

MOUNT NEXT TO FIRE ALARM PANEL IN MAIN VESTIBULE (SEE DWG M-1.1C)

James Posey Associates
Engineering Your Vision
Mechanical & Electrical Engineers
tel 410-265-6100
fax 410-298-9820
jamesposey.com
3112 Lord Baltimore Drive
Baltimore, MD 21244

Professional Certification. I hereby certify that these documents were prepared or approved by me, and that I am a duly licensed professional engineer under the laws of the state of Maryland, License No. 33986, Expiration date: 01-16-2017.

JPA PROJECT NO. 6542-15

11720 Beltsville Drive
Suite 600
Calverton, MD 20705
Tel: 301.595.1000
www.grimmandparker.com
G+P GRIMM AND PARKER

GP #21541

AUTOMATIC TEMPERATURE CONTROLS

LANSDOWNE ELEMENTARY SCHOOL
2301 ALMA ROAD, BALTIMORE, MD

DATE	DESCRIPTION

M-7.1

11/17/16
BID SET

© 2016 James Posey Associates, Inc.

November 10, 2016 6:39 a.m.

© GRIMM AND PARKER, P.C. 2014

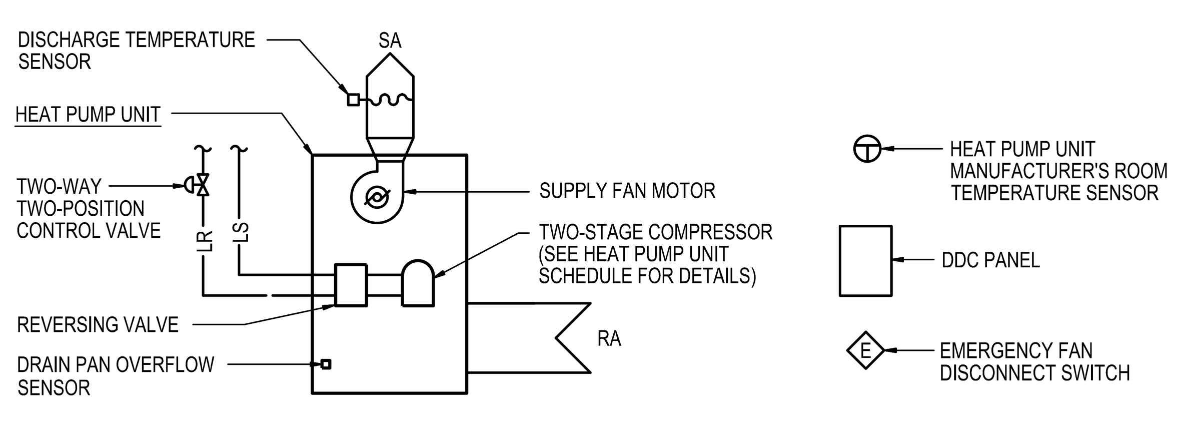

TYPICAL VERTICAL HEAT PUMP UNIT

(WITH TWO-STAGE TYPE COMPRESSORS; ALL HPU'S EXCLUDING HPU-1, 2, AND 34)

A. GENERAL

1. HEAT PUMP UNIT OPERATION IS CONTROLLED BY THE RESPECTIVE ZONE OCCUPIED-UNOCCUPIED SCHEDULING AND SHALL BE ENERGIZED THROUGH THE DDC SYSTEM ONLY ONCE BUILDING GEOTHERMAL LOOP PUMPS ARE PROVEN ENERGIZED.
2. HEAT PUMP UNIT MANUFACTURER SHALL PROVIDE PACKAGED CONTROLLER FOR GENERAL UNIT OPERATION AND TEMPERATURE CONTROL FUNCTIONS. MANUFACTURER'S PACKAGED CONTROLLER SHALL BE PROVIDED WITH BACNET PROTOCOL FOR INTERFACE WITH THE DDC SYSTEM.
3. TWO-WAY TWO-POSITION LR CONTROL VALVE SHALL BE PROVIDED BY ATC. CONTROL VALVES PROVIDED BY UNIT MANUFACTURER ARE NOT ACCEPTABLE. CONTROL VALVE SHALL BE CONNECTED TO THE HEAT PUMP UNIT MANUFACTURER'S PACKAGED CONTROLLER FOR REQUIRED VALVE OPERATION DESCRIBED WITHIN THIS SEQUENCE OF OPERATION.
4. DISCHARGE TEMPERATURE SENSOR SHALL SEND SIGNAL TO THE DDC SYSTEM FOR MONITORING.
5. GENERAL COMPRESSOR OPERATIONAL REQUIREMENTS: COMPRESSOR OPERATION SHALL BE CONTROLLED BY THE HEAT PUMP UNIT MANUFACTURER'S PACKAGED CONTROLLER. UPON A CALL FOR COMPRESSOR OPERATION, THE CONTROL VALVE SHALL BE COMMANDED OPEN. ONCE VALVE IS PROVEN OPEN THROUGH AN END SWITCH LOCATED ON THE CONTROL VALVE, COMPRESSOR OPERATION SHALL BE ENABLED. COMPRESSOR SHALL CYCLE IN RESPONSE TO THE ROOM TEMPERATURE SENSOR. PROOF OF COMPRESSOR OFF STATUS (VIA A CURRENT RELAY) IS REQUIRED PRIOR TO CLOSING VALVE. MANUFACTURERS CONTROL SHALL PROVIDE FOR COMPRESSOR ON/OFF TIME DELAY WHEN THE UNIT IS INITIALLY ENERGIZED, MANUAL RESET, SWITCHED BETWEEN MODES, OR CYCLED WITHIN A SINGLE MODE.
6. GENERAL REVERSING VALVE OPERATIONAL REQUIREMENTS: REVERSING VALVE OPERATION SHALL BE CONTROLLED BY THE HEAT PUMP UNIT MANUFACTURER'S PACKAGED CONTROLLER. REVERSING VALVE SHALL BE ENERGIZED IN COOLING MODE. ONCE ENERGIZED FOR COOLING, IT SHALL STAY ENERGIZED UNTIL HEATING IS ENABLED. IN THE EVENT OF A POWER FAILURE, REVERSING VALVE SHALL FAIL TO HEATING MODE. MANUFACTURER'S CONTROL SHALL DELAY REVERSING VALVE OPERATION AFTER COMPRESSOR SHUTDOWN TO REDUCE NOISE DUE TO REFRIGERANT MIGRATION.

B. WARM-UP CYCLE (OPTIMUM START):

1. WARM-UP CYCLE (OPTIMUM START FUNCTION) SHALL ONLY BE ENABLED WHEN THE ROOM TEMPERATURE IS BELOW THE OCCUPIED HEATING SETPOINT. IF ROOM TEMPERATURE IS ABOVE OCCUPIED HEATING SETPOINT, HEAT PUMP UNIT COMPRESSOR SHALL REMAIN DEENERGIZED AND UNIT SUPPLY FAN SHALL BE ENERGIZED UNDER "FAN-ONLY" OPERATION 20 MINUTES (ADJUSTABLE) PRIOR TO OCCUPANCY.
2. HEAT PUMP UNITS WITHIN A PARTICULAR CONTROL ZONE SHALL BE RANDOMLY STARTED WITH 5-10 SECOND DELAYS BETWEEN EACH START TO PREVENT ALL UNITS WITHIN A ZONE FROM ENERGIZING AT THE SAME TIME.
3. WHEN THE ROOM TEMPERATURE IS BELOW THE OCCUPIED HEATING SETPOINT, THE OPTIMUM START FUNCTION OF THE DDC SYSTEM SHALL PLACE THE HEAT PUMP UNIT MANUFACTURER'S CONTROLLER INTO THE OCCUPIED CYCLE "HEATING" MODE OF OPERATION. THE OPTIMUM START CONTROL FUNCTION SHALL PROVIDE A SPACE TEMPERATURE WITHIN 1 DEGREES OF THE OCCUPIED SETPOINT BY THE OCCUPIED TIME. IF ADEQUATE SPACE TEMPERATURE IS NOT ACHIEVED BY THE OCCUPIED TIME, AN ALARM SHALL BE GENERATED THROUGH THE DDC SYSTEM AND THE UNIT SHALL BE INDEXED TO THE OCCUPIED CYCLE OF OPERATION DESCRIBED BELOW.

C. OCCUPIED CYCLE:

1. HEAT PUMP UNIT MANUFACTURER'S PACKAGED CONTROLLER SHALL BE PROVIDED WITH THREE DISTINCT OPERATIONAL MODES THAT INCLUDE "FAN-ONLY", "COOLING", OR "HEATING". REQUIRED MODE OF OPERATION SHALL BE BASED ON THE HEAT PUMP UNIT MANUFACTURER'S ROOM TEMPERATURE SENSOR ASSOCIATED WITH THAT PARTICULAR HEAT PUMP UNIT.
2. "FAN-ONLY" MODE OF OPERATION:
   a. WHEN SPACE TEMPERATURE IS ABOVE THE ROOM TEMPERATURE SENSORS HEATING SETPOINT AND BELOW THE ROOM TEMPERATURE SENSORS COOLING SETPOINT, THE HEAT PUMP UNIT SHALL BE INDEXED TO THE "FAN-ONLY" MODE OF OPERATION BY THE MANUFACTURER'S PACKAGED CONTROLLER.
   b. SUPPLY FAN UNIT SHALL BE ENERGIZED, RUN CONTINUOUSLY, AND BE INDEXED TO THE "FAN-ONLY" SPEED SETTING.
   c. THE HEAT PUMP UNIT COMPRESSOR SHALL BE DEENERGIZED AND ASSOCIATED TWO-WAY HEAT PUMP LOOP CONTROL VALVE SHALL BE CLOSED THROUGHOUT "FAN-ONLY" OPERATION.
3. "COOLING" MODE OF OPERATION:
   a. WHEN SPACE TEMPERATURE RISES ABOVE THE ROOM TEMPERATURE SENSORS COOING SETPOINT, HEAT PUMP UNIT SHALL BE INDEXED TO THE "COOLING" MODE OF OPERATION BY THE MANUFACTURER'S PACKAGED CONTROLLER.
   b. REVERSING VALVE SHALL BE POSITIONED FOR COOLING OPERATION.
   c. HEAT PUMP UNIT SUPPLY FAN AND COMPRESSOR SHALL BE ENERGIZED AND OPERATE AS DESCRIBED BELOW:
      1. TWO-WAY CONTROL VALVE SHALL BE PROVEN OPEN PRIOR TO ENERGIZING COMPRESSOR. ONCE PROVEN OPEN AND AFTER A 60-SECOND DELAY (ADJUSTABLE), COMPRESSOR SHALL BE ENERGIZED AS DESCRIBED BELOW.
      2. HEAT PUMP UNIT SUPPLY FAN SHALL BE INDEXED TO THE "STAGE 1" FAN SPEED SETTING AND THE COMPRESSOR SHALL BE INDEXED TO THE "STAGE 1" COOLING SETTING.
      3. ON A CONTINUED RISE IN SPACE TEMPERATURE ABOVE THE ROOM TEMPERATURE SENSORS COOLING SETPOINT, THE HEAT PUMP UNIT SUPPLY FAN AND COMPRESSOR SHALL BE INDEXED TO THEIR "STAGE 2" SETTINGS.
   d. ONCE THE ROOM TEMPERATURE FALLS BELOW THE COOLING SETPOINT OF THE ROOM TEMPERATURE SENSOR, COMPRESSOR SHALL BE DEENERGIZED, TWO-WAY CONTROL VALVE SHALL CLOSE, AND HEAT PUMP UNIT MODE OF OPERATION SHALL REVERT FROM "COOLING" TO "FAN-ONLY" OPERATION AS DESCRIBED ABOVE.
4. "HEATING" MODE OF OPERATION:
   a. WHEN SPACE TEMPERATURE FALLS BELOW THE ROOM TEMPERATURE SENSORS HEATING SETPOINT, HEAT PUMP UNIT SHALL BE INDEXED TO THE "HEATING" MODE OF OPERATION BY THE MANUFACTURER'S PACKAGED CONTROLLER.
   b. REVERSING VALVE SHALL BE POSITIONED FOR HEATING OPERATION.
   c. HEAT PUMP UNIT SUPPLY FAN AND COMPRESSOR SHALL BE ENERGIZED AND OPERATE AS DESCRIBED BELOW:
      1. TWO-WAY CONTROL VALVE SHALL BE PROVEN OPEN PRIOR TO ENERGIZING COMPRESSOR. ONCE PROVEN OPEN AND AFTER A 60-SECOND DELAY (ADJUSTABLE), COMPRESSOR SHALL BE ENERGIZED AS DESCRIBED BELOW.
      2. HEAT PUMP UNIT SUPPLY FAN AND COMPRESSOR SHALL BE INDEXED TO THEIR "STAGE 1" HEATING SETTINGS.
      3. ON A CONTINUED FALL IN SPACE TEMPERATURE BELOW THE ROOM TEMPERATURE SENSORS HEATING SETPOINT, THE HEAT PUMP UNIT SUPPLY FAN AND COMPRESSOR SHALL BE INDEXED TO THEIR "STAGE 2" SETTINGS.
   d. ONCE THE ROOM TEMPERATURE RISES ABOVE THE HEATING SETPOINT OF THE ROOM TEMPERATURE SENSOR, COMPRESSOR SHALL BE DEENERGIZED, TWO-WAY CONTROL VALVE SHALL CLOSE, AND HEAT PUMP UNIT MODE OF OPERATION SHALL REVERT FROM "HEATING" TO "FAN-ONLY" OPERATION AS DESCRIBED ABOVE.

D. UNOCCUPIED CYCLE:

1. HEAT PUMP UNIT SUPPLY FAN AND COMPRESSOR SHALL NORMALLY BE DEENERGIZED AND TWO-WAY CONTROL VALVE SHALL NORMALLY BE CLOSED DURING THE UNOCCUPIED CYCLE, UNLESS THE ROOM TEMPERATURE FALLS BELOW THE UNOCCUPIED HEATING SETPOINT OF THE ROOM TEMPERATURE SENSOR.
2. ON A FALL IN SPACE TEMPERATURE BELOW THE UNOCCUPIED HEATING SETPOINT OF THE ROOM TEMPERATURE SENSOR, HEAT PUMP UNIT SHALL BE TEMPORARILY INDEXED TO THE "HEATING MODE" OF OPERATION, AS DESCRIBED IN THE OCCUPIED CYCLE (NOTE THAT DURING THE UNOCCUPIED CYCLE, THE UNIT SHALL BE INDEXED OFF AND NOT TO THE "FAN-ONLY" MODE OF OPERATION ONCE THE ROOM TEMPERATURE SENSORS UNOCCUPIED HEATING SETPOINT IS SATISFIED).

E. SAFETY CONTROLS:

1. IF THE DRAIN PAN OVERFLOW SENSOR SENSES WATER, COMPRESSOR OPERATION SHALL BE DEENERGIZED, CONTROL VALVE SHALL CLOSE, AND AN ALARM STATING THE SPECIFIC ALARM CONDITION (INCLUDING HEAT PUMP NUMBER) SHALL BE SENT TO THE DDC SYSTEM.
2. COMPRESSORS SHALL OPERATE UNDER A MINIMUM 90-SECOND ON/OFF CYCLE.
3. FAILURE OF ROOM TEMPERATURE SENSOR SHALL DEENERGIZE THE ASSOCIATED HEAT PUMP UNIT AND INITIATE AN ALARM TO THE DDC SYSTEM.
4. PROOF OF COMPRESSOR OFF IS REQUIRED PRIOR TO CLOSING THE ASSOCIATED TWO-WAY CONTROL VALVE.
5. IN THE EVENT OF A POWER FAILURE, REVERSING VALVE SHALL FAIL TO HEATING MODE.

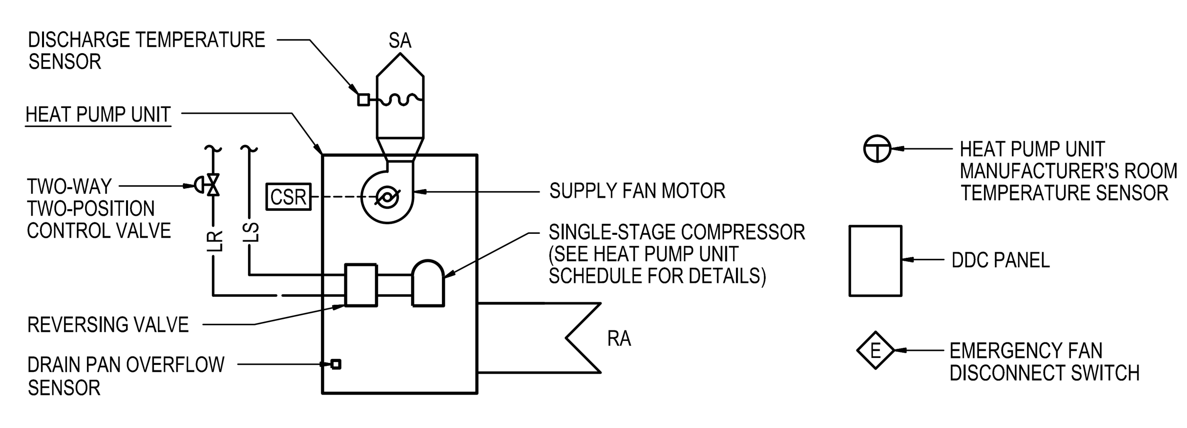

TYPICAL VERTICAL HEAT PUMP UNIT

(WITH SINGLE-STAGE TYPE COMPRESSORS; HPU-34 ONLY)

A. GENERAL

1. HEAT PUMP UNIT OPERATION IS CONTROLLED BY THE RESPECTIVE ZONE OCCUPIED-UNOCCUPIED SCHEDULING AND SHALL BE ENERGIZED THROUGH THE DDC SYSTEM ONLY ONCE BUILDING GEOTHERMAL LOOP PUMPS ARE PROVEN ENERGIZED.
2. HEAT PUMP UNIT MANUFACTURER SHALL PROVIDE PACKAGED CONTROLLER FOR GENERAL UNIT OPERATION AND TEMPERATURE CONTROL FUNCTIONS. MANUFACTURER'S PACKAGED CONTROLLER SHALL BE PROVIDED WITH BACNET PROTOCOL FOR INTERFACE WITH THE DDC SYSTEM.
3. TWO-WAY TWO-POSITION LR CONTROL VALVE SHALL BE PROVIDED BY ATC. CONTROL VALVES PROVIDED BY UNIT MANUFACTURER ARE NOT ACCEPTABLE. CONTROL VALVE SHALL BE CONNECTED TO THE HEAT PUMP UNIT MANUFACTURER'S PACKAGED CONTROLLER FOR REQUIRED VALVE OPERATION DESCRIBED WITHIN THIS SEQUENCE OF OPERATION.
4. DISCHARGE TEMPERATURE SENSOR SHALL SEND SIGNAL TO THE DDC SYSTEM FOR MONITORING.
5. GENERAL COMPRESSOR OPERATIONAL REQUIREMENTS: COMPRESSOR OPERATION SHALL BE CONTROLLED BY THE HEAT PUMP UNIT MANUFACTURER'S PACKAGED CONTROLLER. UPON A CALL FOR COMPRESSOR OPERATION, THE CONTROL VALVE SHALL BE COMMANDED OPEN. ONCE VALVE IS PROVEN OPEN THROUGH AN END SWITCH LOCATED ON THE CONTROL VALVE, COMPRESSOR OPERATION SHALL BE ENABLED. COMPRESSOR SHALL CYCLE IN RESPONSE TO THE ROOM TEMPERATURE SENSOR. PROOF OF COMPRESSOR OFF STATUS (VIA A CURRENT RELAY) IS REQUIRED PRIOR TO CLOSING VALVE. MANUFACTURERS CONTROL SHALL PROVIDE FOR COMPRESSOR ON/OFF TIME DELAY WHEN THE UNIT IS INITIALLY ENERGIZED, MANUAL RESET, SWITCHED BETWEEN MODES, OR CYCLED WITHIN A SINGLE MODE.
6. GENERAL REVERSING VALVE OPERATIONAL REQUIREMENTS: REVERSING VALVE OPERATION SHALL BE CONTROLLED BY THE HEAT PUMP UNIT MANUFACTURER'S PACKAGED CONTROLLER. REVERSING VALVE SHALL BE ENERGIZED IN COOLING MODE. ONCE ENERGIZED FOR COOLING, IT SHALL STAY ENERGIZED UNTIL HEATING IS ENABLED. IN THE EVENT OF A POWER FAILURE, REVERSING VALVE SHALL FAIL TO HEATING MODE. MANUFACTURER'S CONTROL SHALL DELAY REVERSING VALVE OPERATION AFTER COMPRESSOR SHUTDOWN TO REDUCE NOISE DUE TO REFRIGERANT MIGRATION.

B. WARM-UP CYCLE (OPTIMUM START):

1. WARM-UP CYCLE (OPTIMUM START FUNCTION) SHALL ONLY BE ENABLED WHEN THE ROOM TEMPERATURE IS BELOW THE OCCUPIED HEATING SETPOINT. IF ROOM TEMPERATURE IS ABOVE OCCUPIED HEATING SETPOINT, HEAT PUMP UNIT COMPRESSOR SHALL REMAIN DEENERGIZED AND UNIT SUPPLY FAN SHALL BE ENERGIZED UNDER "FAN-ONLY" OPERATION 20 MINUTES (ADJUSTABLE) PRIOR TO OCCUPANCY.
2. HEAT PUMP UNITS WITHIN A PARTICULAR CONTROL ZONE SHALL BE RANDOMLY STARTED WITH 5-10 SECOND DELAYS BETWEEN EACH START TO PREVENT ALL UNITS WITHIN A ZONE FROM ENERGIZING AT THE SAME TIME.
3. WHEN THE ROOM TEMPERATURE IS BELOW THE OCCUPIED HEATING SETPOINT, THE OPTIMUM START FUNCTION OF THE DDC SYSTEM SHALL PLACE THE HEAT PUMP UNIT MANUFACTURER'S CONTROLLER INTO THE OCCUPIED CYCLE "HEATING" MODE OF OPERATION. THE OPTIMUM START CONTROL FUNCTION SHALL PROVIDE A SPACE TEMPERATURE WITHIN 1 DEGREES OF THE OCCUPIED SETPOINT BY THE OCCUPIED TIME. IF ADEQUATE SPACE TEMPERATURE IS NOT ACHIEVED BY THE OCCUPIED TIME, AN ALARM SHALL BE GENERATED THROUGH THE DDC SYSTEM AND THE UNIT SHALL BE INDEXED TO THE OCCUPIED CYCLE OF OPERATION DESCRIBED BELOW.

C. OCCUPIED CYCLE:

1. HEAT PUMP UNIT MANUFACTURER'S PACKAGED CONTROLLER SHALL BE PROVIDED WITH THREE DISTINCT OPERATIONAL MODES THAT INCLUDE "FAN-ONLY", "COOLING", OR "HEATING". REQUIRED MODE OF OPERATION SHALL BE BASED ON THE HEAT PUMP UNIT MANUFACTURER'S ROOM TEMPERATURE SENSOR ASSOCIATED WITH THAT PARTICULAR HEAT PUMP UNIT.
2. "FAN-ONLY" MODE OF OPERATION:
   a. WHEN SPACE TEMPERATURE IS ABOVE THE ROOM TEMPERATURE SENSORS HEATING SETPOINT AND BELOW THE ROOM TEMPERATURE SENSORS COOLING SETPOINT, THE HEAT PUMP UNIT SHALL BE INDEXED TO THE "FAN-ONLY" MODE OF OPERATION BY THE MANUFACTURER'S PACKAGED CONTROLLER.
   b. SUPPLY FAN UNIT SHALL BE ENERGIZED, RUN CONTINUOUSLY, AND BE INDEXED TO THE "FAN-ONLY" SPEED SETTING.
   c. THE HEAT PUMP UNIT COMPRESSOR SHALL BE DEENERGIZED AND ASSOCIATED TWO-WAY HEAT PUMP LOOP CONTROL VALVE SHALL BE CLOSED THROUGHOUT "FAN-ONLY" OPERATION.
3. "COOLING" MODE OF OPERATION:
   a. WHEN SPACE TEMPERATURE RISES ABOVE THE ROOM TEMPERATURE SENSORS COOING SETPOINT, HEAT PUMP UNIT SHALL BE INDEXED TO THE "COOLING" MODE OF OPERATION BY THE MANUFACTURER'S PACKAGED CONTROLLER.
   b. REVERSING VALVE SHALL BE POSITIONED FOR COOLING OPERATION.
   c. HEAT PUMP UNIT SUPPLY FAN AND COMPRESSOR SHALL BE ENERGIZED AND OPERATE AS DESCRIBED BELOW:
      1. TWO-WAY CONTROL VALVE SHALL BE PROVEN OPEN PRIOR TO ENERGIZING COMPRESSOR. ONCE PROVEN OPEN AND AFTER A 60-SECOND DELAY (ADJUSTABLE), COMPRESSOR SHALL BE ENERGIZED AS DESCRIBED BELOW.
      2. HEAT PUMP UNIT SUPPLY FAN AND COMPRESSOR SHALL BE INDEXED TO THEIR "STAGE 1" COOLING SETTINGS.
   d. ONCE THE ROOM TEMPERATURE FALLS BELOW THE COOLING SETPOINT OF THE ROOM TEMPERATURE SENSOR, COMPRESSOR SHALL BE DEENERGIZED, TWO-WAY CONTROL VALVE SHALL CLOSE, AND HEAT PUMP UNIT MODE OF OPERATION SHALL REVERT FROM "COOLING" TO "FAN-ONLY" OPERATION AS DESCRIBED ABOVE.
4. "HEATING" MODE OF OPERATION:
   a. WHEN SPACE TEMPERATURE FALLS BELOW THE ROOM TEMPERATURE SENSORS HEATING SETPOINT, HEAT PUMP UNIT SHALL BE INDEXED TO THE "HEATING" MODE OF OPERATION BY THE MANUFACTURER'S PACKAGED CONTROLLER.
   b. REVERSING VALVE SHALL BE POSITIONED FOR HEATING OPERATION.
   c. HEAT PUMP UNIT SUPPLY FAN AND COMPRESSOR SHALL BE ENERGIZED AND OPERATE AS DESCRIBED BELOW:
      1. TWO-WAY CONTROL VALVE SHALL BE PROVEN OPEN PRIOR TO ENERGIZING COMPRESSOR. ONCE PROVEN OPEN AND AFTER A 60-SECOND DELAY (ADJUSTABLE), COMPRESSOR SHALL BE ENERGIZED AS DESCRIBED BELOW.
      2. HEAT PUMP UNIT SUPPLY FAN AND COMPRESSOR SHALL BE INDEXED TO THEIR "STAGE 1" HEATING SETTINGS .
   d. ONCE THE ROOM TEMPERATURE RISES ABOVE THE HEATING SETPOINT OF THE ROOM TEMPERATURE SENSOR, COMPRESSOR SHALL BE DEENERGIZED, TWO-WAY CONTROL VALVE SHALL CLOSE, AND HEAT PUMP UNIT MODE OF OPERATION SHALL REVERT FROM "HEATING" TO "FAN-ONLY" OPERATION AS DESCRIBED ABOVE.

D. UNOCCUPIED CYCLE:

1. HEAT PUMP UNIT SUPPLY FAN AND COMPRESSOR SHALL NORMALLY BE DEENERGIZED AND TWO-WAY CONTROL VALVE SHALL NORMALLY BE CLOSED DURING THE UNOCCUPIED CYCLE, UNLESS THE ROOM TEMPERATURE FALLS BELOW THE UNOCCUPIED HEATING SETPOINT OF THE ROOM TEMPERATURE SENSOR.
2. ON A FALL IN SPACE TEMPERATURE BELOW THE UNOCCUPIED HEATING SETPOINT OF THE ROOM TEMPERATURE SENSOR, HEAT PUMP UNIT SHALL BE TEMPORARILY INDEXED TO THE "HEATING MODE" OF OPERATION, AS DESCRIBED IN THE OCCUPIED CYCLE (NOTE THAT DURING THE UNOCCUPIED CYCLE, THE UNIT SHALL BE INDEXED OFF AND NOT TO THE "FAN-ONLY" MODE OF OPERATION ONCE THE ROOM TEMPERATURE SENSORS UNOCCUPIED HEATING SETPOINT IS SATISFIED).

E. SAFETY CONTROLS:

1. IF THE DRAIN PAN OVERFLOW SENSOR SENSES WATER, COMPRESSOR OPERATION SHALL BE DEENERGIZED, CONTROL VALVE SHALL CLOSE, AND AN ALARM STATING THE SPECIFIC ALARM CONDITION (INCLUDING HEAT PUMP NUMBER) SHALL BE SENT TO THE DDC SYSTEM.
2. COMPRESSORS SHALL OPERATE UNDER A MINIMUM 90-SECOND ON/OFF CYCLE.
3. FAILURE OF ROOM TEMPERATURE SENSOR SHALL DEENERGIZE THE ASSOCIATED HEAT PUMP UNIT AND INITIATE AN ALARM TO THE DDC SYSTEM.
4. PROOF OF COMPRESSOR OFF IS REQUIRED PRIOR TO CLOSING THE ASSOCIATED TWO-WAY CONTROL VALVE.
5. IN THE EVENT OF A POWER FAILURE, REVERSING VALVE SHALL FAIL TO HEATING MODE.

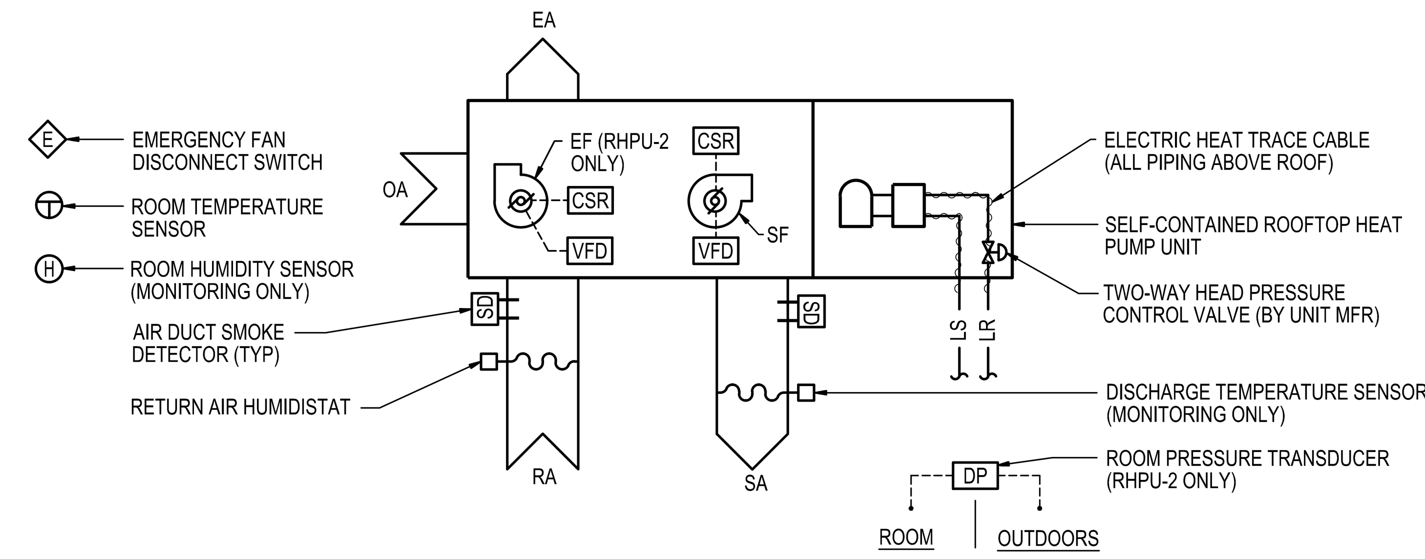

SINGLE-ZONE VAV ROOFTOP HEAT PUMP UNIT (WITH HOT GAS REHEAT)

(RHPU-1 AND RPHU-2)

A. GENERAL:

1. THE CONTROLS CONTRACTOR SHALL BE RESPONSIBLE FOR INSTALLING AND WIRING ALL CONTROL EQUIPMENT SUPPLIED WITH ROOFTOP HEAT PUMP UNIT SYSTEM. PROVIDE ANY SWITCHES AND RELAYS REQUIRED TO ACCOMPLISH THE MANUFACTURERS PACKAGED CONTROL SEQUENCE OF OPERATION AND THOSE ITEMS INDICATED BELOW.
2. PROVIDE HARDWIRE CONTROL INTERLOCK BETWEEN THE DDC SYSTEM, ROOFTOP HEAT PUMP UNIT'S PACKAGED CONTROLS, DDC UNIT CONTROLLER, AND ALL OTHER CONTROL DEVICES INDICATED AND/OR REQUIRED FOR UNIT OPERATION AND DDC MONITORING. PROVIDE BACNET INTERFACE WITH THE UNIT MANUFACTURERS CONTROLLER FOR UP TO 6 READ / WRITE POINTS (PER ROOFTOP UNIT) TO DDC SYSTEM. FINAL LISTING OF BACNET CONTROL POINTS SHALL BE DETERMINED DURING THE SUBMITTAL PHASE.
3. DDC CONTROLLER SHALL RECEIVE INPUT SIGNALS FROM THE ROOM TEMPERATURE SENSOR AND PROVIDE A HEATING/COOLING OUTPUT SIGNAL TO THE MANUFACTURERS MICROPROCESSOR CONTROLLER FOR UNIT TEMPERATURE CONTROL FUNCTIONS. DDC CONTROLLER TEMPERATURE SETPOINTS SHALL BE ADJUSTABLE THROUGH THE DDC SYSTEM.
4. MANUFACTURER'S MICROPROCESSOR CONTROLLER SHALL PROVIDE ALL UNIT TEMPERATURE, HUMIDITY, AND FAN SPEED (SUPPLY AND EXHAUST) CONTROL FUNCTIONS, INCLUDING BUT NOT LIMITED TO DAMPER, ECONOMIZER, REVERSING VALVE, ROOM PRESSURIZATION CONTROL, AND COMPRESSOR OPERATION.
5. DDC SYSTEM SHALL ENERGIZE/DEENERGIZE UNIT OPERATION, INDEX THE UNIT TO THE APPROPRIATE OPERATIONAL MODE (MORNING WARM-UP /OCCUPIED/UNOCCUPIED), MONITOR SUPPLY AND EXHAUST FAN OPERATION VIA CURRENT SENSING RELAYS, INPUT HEATING/ COOLING TO THE MANUFACTURER'S MICROPROCESSOR CONTROLLER, REPORT GENERAL ALARM CONDITIONS, AND MONITOR UNIT DISCHARGE AIR TEMPERATURE AND SPACE RELATIVE HUMIDITY.

B. WARM-UP CYCLE:

1. WARM-UP CYCLE (OPTIMUM START FUNCTION) SHALL ONLY BE ENABLED WHEN THE ROOM TEMPERATURE IS BELOW THE OCCUPIED HEATING SETPOINT. IF ROOM TEMPERATURE IS ABOVE OCCUPIED HEATING SETPOINT, ROOFTOP HEAT PUMP UNIT SHALL REMAIN DEENERGIZED PRIOR TO OCCUPANCY.
2. WHEN THE ROOM TEMPERATURE IS BELOW THE OCCUPIED HEATING SETPOINT, ROOFTOP UNIT SHALL BE ENERGIZED THROUGH A SIGNAL FROM THE DDC SYSTEM AND PLACED INTO THE MORNING WARM-UP MODE OF OPERATION THROUGH A SIGNAL FROM THE DDC SYSTEM. UNIT SHALL OPERATE UNDER IT'S PACKAGED CONTROLS TO MAINTAIN THE HEATING SETPOINT OF THE ROOM TEMPERATURE SENSOR.
3. ALL COMPANION EXHAUST FANS SHALL BE DEENERGIZED.

C. OCCUPIED CYCLE:

1. ROOFTOP UNIT SHALL REMAIN ENERGIZED AND BE PLACED INTO THE OCCUPIED MODE OF OPERATION THROUGH A SIGNAL FROM THE DDC SYSTEM. UNIT SHALL OPERATE UNDER IT'S PACKAGED CONTROLS TO MAINTAIN THE ROOM TEMPERATURE SENSOR AND RETURN AIR HUMIDISTAT SETPOINTS.
2. ALL COMPANION EXHAUST FANS SHALL BE ENERGIZED.

D. UNOCCUPIED CYCLE:

1. ROOFTOP HEAT PUMP UNIT SHALL BE DEENERGIZED THROUGH THE DDC SYSTEM AND PLACED INTO THE UNOCCUPIED MODE OF OPERATION WITH THE UNIT OA DAMPER POSITIONED CLOSED THROUGHOUT THE UNOCCUPIED CYCLE.
2. ALL COMPANION EXHAUST FANS SHALL BE DEENERGIZED.
3. WHENEVER THE SPACE TEMPERATURE FALLS BELOW THE ROOM TEMPERATURE SENSORS UNOCCUPIED HEATING SETPOINT, ROOFTOP HEAT PUMP UNIT OPERATION SHALL BE TEMPORARILY ENERGIZED THROUGH THE DDC SYSTEM AND OPERATE UNDER ITS PACKAGED CONTROLS.
4. ONCE THE SPACE TEMPERATURE RISES ABOVE ROOM TEMPERATURE SENSORS UNOCCUPIED HEATING SETPOINT, ROOFTOP HEAT PUMP UNIT OPERATION SHALL BE DEENERGIZED THROUGH THE DDC SYSTEM.

E. SAFETY CONTROLS:

1. WHENEVER THE EMERGENCY FAN DISCONNECT SWITCH IS THROWN OR THE LIMITATIONS OF ANY AIR DUCT SMOKE DETECTOR ARE EXCEEDED, THE UNIT SHALL BE DEENERGIZED AND AN ALARM MESSAGE STATING SPECIFIC ALARM CONDITION SENT TO THE DDC SYSTEM.

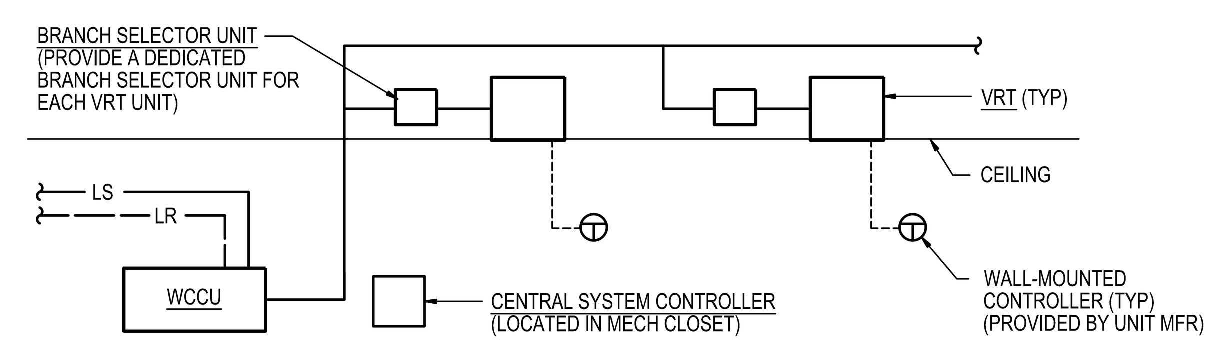

VARIABLE REFRIGERANT SYSTEMS

A. SYSTEM MODE OF OPERATION ("OCCUPIED" OR "UNOCCUPIED") SHALL BE CONTROLLED THROUGH THE DDC SYSTEM'S RESPECTIVE ZONE OCCUPIED / UNOCCUPIED TIME SCHEDULING CONTROL PROGRAM.

B. INTEGRATION WITH THE MANUFACTURER'S CENTRAL CONTROLLER (OR CONTROLLERS) SHALL BE ACCOMPLISHED THROUGH BACNET PROTOCOL. BACNET INTEGRATION FOR BASIS-OF-DESIGN MANUFACTURER IS NOT "PLUG-AND-PLAY" AND WILL REQUIRE BOTH MAPPING OF CONTROL POINTS AND DEVELOPING DDC CONTROL PROGRAMMING. DDC CONTRACTOR SHALL BE RESPONSIBLE FOR MAPPING OF BACNET CONTROL POINTS, DEVELOPING REQUIRED CONTROL PROGRAMMING, AND PROVIDING ANY SWITCHES, RELAYS, AND WIRING FOR ACCOMPLISHING THE MANUFACTURER'S REQUIRED SEQUENCE OF OPERATION. DDC CONTRACTOR SHALL BE CERTIFIED FOR INTEGRATION THROUGH ATTENDANCE AT THE APPROVED VRF SYSTEM MANUFACTURER'S CONTROLS INTEGRATION CLASSROOM TRAINING SESSIONS.

C. GEOTHERMAL PUMPS SHALL BE PROVEN ENERGIZED PRIOR TO INDEXING THE SYSTEM TO THE "OCCUPIED" MODE OF OPERATION.

D. OCCUPIED CYCLE:

1. VRF SYSTEM SHALL BE INDEXED TO THE "OCCUPIED" MODE OF OPERATION THROUGH THE DDC SYSTEM'S TIME SCHEDULING PROGRAM AND OPERATE CONTINUOUSLY DURING THE OCCUPIED CYCLE UNDER IT'S PACKAGED CONTROLS FOR MAINTAINING THE ASSOCIATED OCCUPIED HEATING AND COOLING TEMPERATURE SETPOINTS.

E. UNOCCUPIED CYCLE:

1. VRF SYSTEM SHALL BE INDEXED TO THE "UNOCCUPIED" MODE OF OPERATION THROUGH THE DDC SYSTEM'S TIME SCHEDULING PROGRAM AND CYCLE DURING THE UNOCCUPIED CYCLE UNDER IT'S PACKAGED CONTROLS FOR MAINTAINING THE ASSOCIATED UNOCCUPIED HEATING AND COOLING TEMPERATURE SETPOINTS.

James Posey Associates
Engineering Your Vision
Mechanical & Electrical Engineers
jamesposey.com
tel 410-265-6100
fax 410-298-9820
3112 Lord Baltimore Drive
Baltimore, MD 21244

Professional Certification. I hereby certify that these documents were prepared or approved by me, and that I am a duly licensed professional engineer under the laws of the state of Maryland, License No. 33986, Expiration date: 01-16-2017.

JPA PROJECT NO. 6542-15

GRIMM AND PARKER
11720 Beltsville Drive
Suite 600
Calverton, MD 20705
Tel: 301.595.1000
www.grimmandparker.com

GP #21541

AUTOMATIC TEMPERATURE CONTROLS

LANSDOWNE ELEMENTARY SCHOOL
2301 ALMA ROAD, BALTIMORE, MD

DATE	DESCRIPTION

M-7.2

11/17/16
BID SET

© 2016 James Posey Associates, Inc.

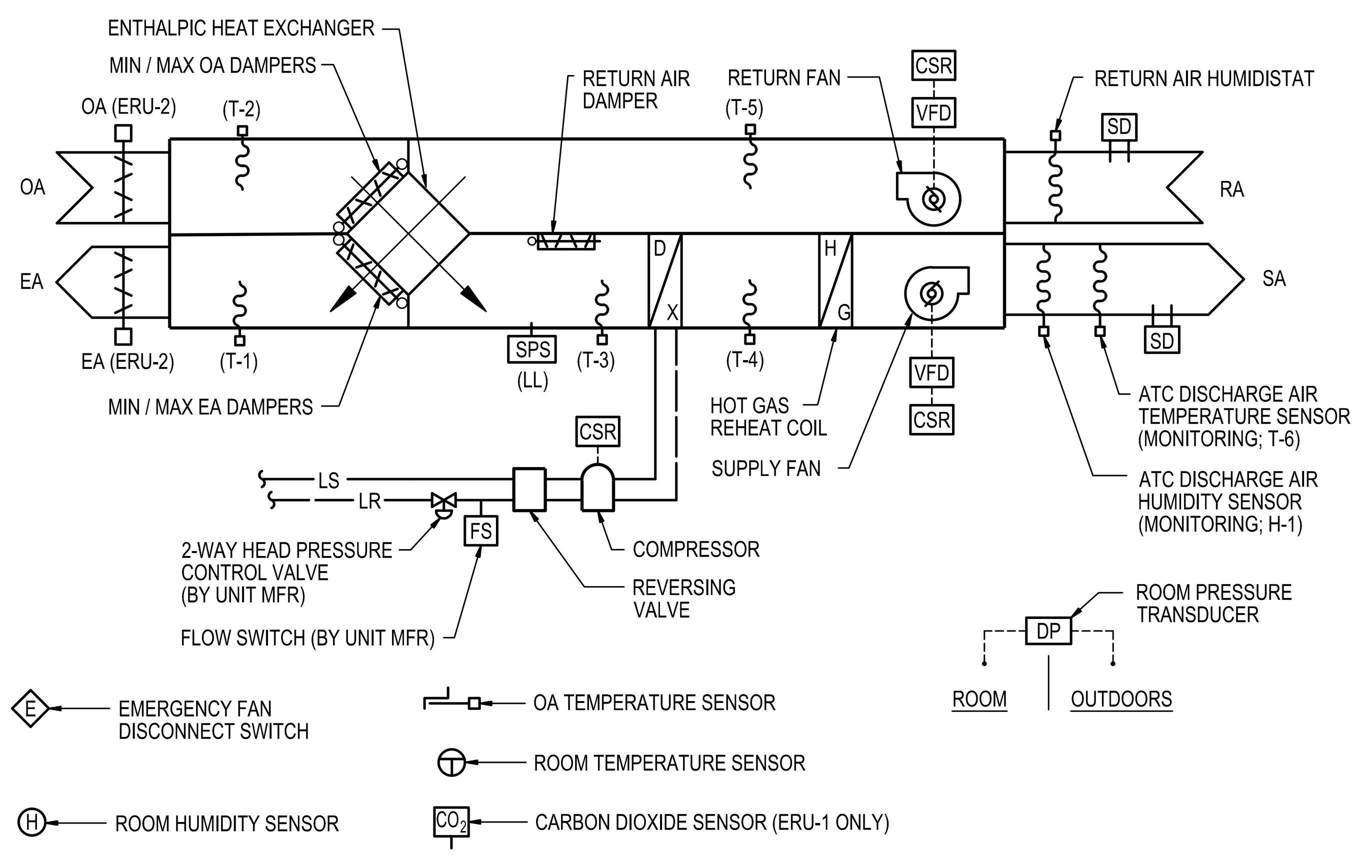

ENERGY RECOVERY UNIT
(ERU-1 AND ERU-2)

A. UNIT IS CONTROLLED BY RESPECTIVE ZONE OCCUPIED-UNOCCUPIED SCHEDULE.

B. UNIT MANUFACTURER SHALL PROVIDE A MICROPROCESSOR BASED UNIT CONTROLLER COMPLETE WITH CONTROLS FOR REFRIGERATION CYCLE, REFRIGERANT SAFETIES, TEMPERATURE CONTROL (INCLUDING DAMPER ACTUATORS, TEMPERATURE SENSORS T-1 THROUGH T-5, RETURN AIR HUMIDISTAT, INTERFACE WITH ROOM TEMPERATURE SENSOR, AND INTERFACE WITH ROOM HUMIDITY SENSOR), AND OUTDOOR AIR RESET (INCLUDING ROOM CARBON DIOXIDE SENSOR [ERU-1 ONLY] AND OA AIRFLOW MINIMUM OA DAMPER). DISCHARGE TEMPERATURE SENSOR T-6 AND HUMIDITY SENSOR H-1 SHALL BE PROVIDED FOR DDC MONITORING FUNCTIONS. LOW LIMIT STATIC PRESSURE SENSOR SHALL BE PROVIDED FOR DDC MONITORING AND SAFETY FUNCTIONS DESCRIBED BELOW.

C. DDC SYSTEM SHALL ENERGIZE/DEENERGIZE UNIT OPERATION, INDEX THE UNIT TO THE APPROPRIATE OPERATIONAL MODE (WARM-UP/OCCUPIED/UNOCCUPIED), MONITOR SUPPLY AND RETURN FAN OPERATION VIA A CURRENT SENSING RELAY, REPORT GENERAL ALARM CONDITIONS, MONITOR DISCHARGE AIR TEMPERATURES AND RELATIVE HUMIDITY LEVELS, MONITOR SPACE TEMPERATURE AND HUMIDITY LEVELS, AND MONITOR UNIT STATIC PRESSURE LEVELS VIA A LOW LIMIT STATIC PRESSURE SENSOR WITHIN THE UNIT.

D. FOR ERU-2, THE MANUFACTURERS MICROPROCESSOR BASED CONTROLLER SHALL BE INSTALLED WITHIN THE WEATHERPROOF CONTROL ENCLOSURE ON THE EXTERIOR OF THE UNIT CASING. CONTROLLERS SHALL HAVE DISPLAY AND KEYPAD.

E. THE CONTROLS CONTRACTOR SHALL BE RESPONSIBLE FOR INSTALLING AND WIRING ALL CONTROL EQUIPMENT SUPPLIED WITH THE ENERGY RECOVERY UNIT SYSTEM. PROVIDE ANY SWITCHES AND RELAYS TO ACCOMPLISH THE MANUFACTURERS PACKAGED CONTROL SEQUENCE OF OPERATION.

F. PROVIDE HARDWIRE CONTROL INTERLOCK BETWEEN THE DDC SYSTEM, UNIT MANUFACTURERS CONTROLS, AND ALL OTHER CONTROL DEVICES INDICATED AND/OR REQUIRED FOR UNIT OPERATION AND DDC MONITORING. PROVIDE BACNET INTERFACE WITH THE UNIT MANUFACTURERS CONTROLLER FOR UP TO 10 READ / WRITE POINTS TO DDC SYSTEM. FINAL LISTING OF BACNET CONTROL POINTS SHALL BE DETERMINED DURING THE SUBMITTAL PHASE.

G. WARM-UP CYCLE:

1. WARM-UP CYCLE (OPTIMUM START FUNCTION) SHALL ONLY BE ENABLED WHEN THE ROOM TEMPERATURE IS BELOW THE OCCUPIED HEATING SETPOINT. IF ROOM TEMPERATURE IS ABOVE OCCUPIED HEATING SETPOINT, ENERGY RECOVERY UNIT SHALL REMAIN DEENERGIZED PRIOR TO OCCUPANCY.
2. WHEN THE ROOM TEMPERATURE IS BELOW THE OCCUPIED HEATING SETPOINT, ENERGY RECOVERY UNIT SHALL BE ENERGIZED THROUGH A SIGNAL FROM THE DDC SYSTEM AND PLACED INTO THE MORNING WARM-UP MODE OF OPERATION THROUGH A SIGNAL FROM THE DDC SYSTEM. UNIT SHALL OPERATE UNDER IT'S PACKAGED CONTROLS TO MAINTAIN THE HEATING SETPOINT OF THE ROOM TEMPERATURE SENSOR.
3. FOR ERU-2 ONLY: DUCT-MOUNTED OA AND EA DAMPERS SHALL BE PROVEN OPEN PRIOR TO ENERGIZING UNIT.
4. ALL COMPANION EXHAUST FANS SHALL BE DEENERGIZED.

H. OCCUPIED CYCLE:

1. ENERGY RECOVERY UNIT SYSTEM SHALL BE ENERGIZED AND PLACED IN THE OCCUPIED MODE OF OPERATION THROUGH A SIGNAL FROM THE DDC SYSTEM. UNIT SHALL OPERATE UNDER IT'S PACKAGED CONTROLS TO MAINTAIN THE ROOM TEMPERATURE SENSOR, ROOM HUMIDITY SENSOR, AND ROOM CARBON DIOXIDE SENSOR (ERU-1 ONLY) SETPOINTS.
2. FOR ERU-2 ONLY: DUCT-MOUNTED OA AND EA DAMPERS SHALL BE PROVEN OPEN PRIOR TO ENERGIZING UNIT.
3. ALL COMPANION EXHAUST FANS SHALL BE ENERGIZED.

I. UNOCCUPIED CYCLE:

1. ENERGY RECOVERY UNIT SHALL BE DEENERGIZED THROUGH THE DDC SYSTEM AND PLACED INTO THE UNOCCUPIED MODE OF OPERATION.
2. FOR ERU-2 ONLY: DUCT-MOUNTED OA AND EA DAMPERS SHALL CLOSE THROUGHOUT THE UNOCCUPIED CYCLE ONCE THE UNIT IS DEENERGIZED.
3. ALL COMPANION EXHAUST FANS SHALL BE DEENERGIZED.
4. WHENEVER THE SPACE TEMPERATURE FALLS BELOW THE ROOM TEMPERATURE SENSORS UNOCCUPIED HEATING SETPOINT, ENERGY RECOVERY UNIT SHALL BE TEMPORARILY ENERGIZED THROUGH THE DDC SYSTEM AND OPERATE UNDER ITS PACKAGED CONTROLS.
5. ONCE THE SPACE TEMPERATURE RISES ABOVE ROOM TEMPERATURE SENSORS UNOCCUPIED HEATING SETPOINT, ENERGY RECOVERY UNIT OPERATION SHALL BE DEENERGIZED THROUGH THE DDC SYSTEM.

J. SAFETY AND EMERGENCY CONTROL:

1. WHENEVER THE EMERGENCY FAN DISCONNECT SWITCH IS THROWN OR LIMITATIONS ARE EXCEEDED BY ANY AIR DUCT SMOKE DETECTOR OR STATIC PRESSURE SENSOR, THE UNIT SHALL BE DEENERGIZED AND OA AND EA DAMPERS SHALL CLOSE. AN ALARM INDICATING THE SPECIFIC CONDITION SHALL BE SENT TO THE DDC SYSTEM

AUTO-OCCUPIED-UNOCCUPIED CONTROL SCHEDULE

OPERATION:

1. EACH ZONE SHALL HAVE AN AUTO-OCCUPIED-UNOCCUPIED MAINTENANCE SCHEDULE. ZONES ARE DEFINED IN THE SCHEDULE PROVIDED.
2. WHEN INDEXED TO "AUTO" THE EQUIPMENT SERVED BY THE CONTROL ZONE WILL FUNCTION EITHER ON THE "OCCUPIED" CYCLE "UNOCCUPIED" CYCLE OR "MAINTENANCE" CYCLE AS DETERMINED BY BUILDING AUTOMATION SYSTEM.
3. WHEN INDEXED TO "OCCUPIED" THE EQUIPMENT SERVED BY THE CONTROL ZONE SHALL FUNCTION ON THE "OCCUPIED" CYCLE.
4. WHEN INDEXED TO "UNOCCUPIED" THE EQUIPMENT SERVED BY THE CONTROL ZONE SHALL FUNCTION ON THE UNOCCUPIED CYCLE.
5. THE MAINTENANCE CYCLE IS INTENDED TO ALLOW MAINTENANCE OVERRIDE OF THE UNOCCUPIED CYCLE WITHOUT INTRODUCING VENTILATION, AS BUILDING OCCUPANTS ARE NOT PRESENT WITHIN THE FACILITY. WHEN INDEXED TO "MAINTENANCE" THE EQUIPMENT SERVED BY THE CONTROL ZONE SHALL FUNCTION ON THE "MAINTENANCE" CYCLE. FOR EQUIPMENT WITHOUT A "MAINTENANCE" CYCLE WRITTEN IN THE SEQUENCE, FOLLOW THE FOLLOWING PROTOCOL.

AUTO OCCUPIED-UNOCCIPIED CONTROL SCHEDULE

ZONE	AREA SERVED	EQUIPMENT
1	ADMINISTRATION	DOAS-3, VRT-1 THRU VRT-11, WCCU-1, AND DHWRP-1
2	CAFETERIA	ERU-1 AND EF-18
3	KITCHEN	RHPU-1, EF-1, AND DHWRP-2
4	GYMNASIUM	ERU-2 AND EF-2
5	TWO-STORY CLASSROOM (WEST)	DOAS-2, HPU-9, 12, 15 THRU 22, 32, AND 35 THRU 44
6	TWO-STORY CLASSROOM (EAST)	DOAS-1, HPU-3 THRU 8, 10, 14, 23 THRU 31, 33, AND 34
7	MEDIA CENTER	DOAS-1, HPU-11, 13A, 13B, AND 45
8	COMMUNITY ROOM	RHPU-2 AND EF-11
9	MUSIC CLASSROOMS	HPU-1 AND HPU-2

GENERAL NOTE:

1. EACH ZONE SHALL HAVE SEPARATE TIME SCHEDULING THRU DDC SYSTEM

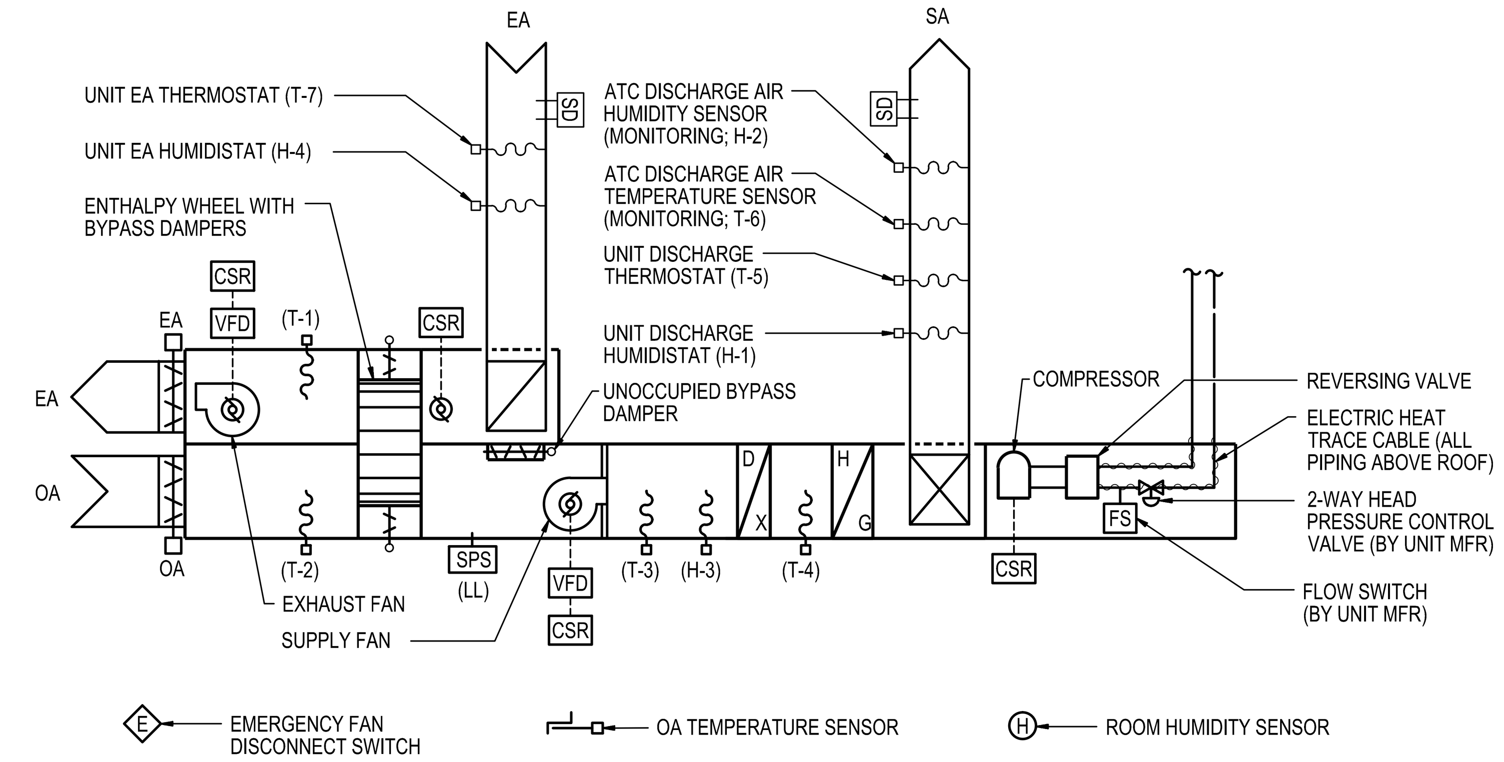

DEDICATED OUTDOOR AIR UNIT (WITH ENTHALPY WHEEL AND HOT GAS REHEAT)
(ADMINISTRATION AREAS; DOAS-3)

A. UNIT IS CONTROLLED BY RESPECTIVE ZONE OCCUPIED-UNOCCUPIED SCHEDULE.

B. VFD'S ARE PROVIDED AT SUPPLY AND EXHAUST FANS FOR BALANCING PURPOSES. SUPPLY AND EXHAUST FANS SHALL OPERATE AT A CONSTANT AIRFLOW.

C. UNIT MANUFACTURER SHALL PROVIDE A MICROPROCESSOR BASED UNIT CONTROLLER COMPLETE WITH CONTROLS FOR REFRIGERATION CYCLE, REFRIGERANT SAFETIES AND TEMPERATURE CONTROL (INCLUDING DAMPER ACTUATORS, TEMPERATURE SENSORS T-1 THROUGH T-4, UNIT DISCHARGE THERMOSTAT T-5, UNIT EA THERMOSTAT T-7, AND UNIT HUMIDISTATS H-1, H-3, AND H-4). ROOM HUMIDITY SENSOR, INSERTION TEMPERATURE SENSOR T-6, AND INSERTION HUMIDITY SENSORS H-2 SHALL BE PROVIDED FOR DDC MONITORING FUNCTIONS. LOW LIMIT STATIC PRESSURE SENSOR SHALL BE PROVIDED FOR DDC MONITORING AND SAFETY FUNCTIONS DESCRIBED BELOW.

D. DDC SYSTEM SHALL ENERGIZE/DEENERGIZE UNIT OPERATION, INDEX THE UNIT TO THE APPROPRIATE OPERATIONAL MODE (OCCUPIED/UNOCCUPIED), MONITOR SUPPLY AND EXHAUST FAN OPERATION VIA A CURRENT SENSING RELAY, MONITOR ENTHALPY WHEEL OPERATION VIA A CURRENT SENSING RELAY, REPORT GENERAL ALARM CONDITIONS, MONITOR DISCHARGE AIR TEMPERATURES AND RELATIVE HUMIDITY LEVELS, MONITOR SPACE RELATIVE HUMIDITY LEVELS, AND MONITOR UNIT STATIC PRESSURE LEVELS VIA A LOW LIMIT STATIC PRESSURE SENSOR WITHIN THE UNIT.

E. THE MANUFACTURERS MICROPROCESSOR BASED CONTROLLER SHALL BE INSTALLED WITHIN THE WEATHERPROOF CONTROL ENCLOSURE ON THE EXTERIOR OF THE UNIT CASING. CONTROLLERS SHALL HAVE DISPLAY AND KEYPAD.

F. THE CONTROLS CONTRACTOR SHALL BE RESPONSIBLE FOR INSTALLING AND WIRING ALL CONTROL EQUIPMENT SUPPLIED WITH THE DEDICATED OUTDOOR AIR SYSTEM. PROVIDE ANY SWITCHES AND RELAYS TO ACCOMPLISH THE MANUFACTURERS PACKAGED CONTROL SEQUENCE OF OPERATION.

G. PROVIDE HARDWIRE CONTROL INTERLOCK BETWEEN THE DDC SYSTEM, UNIT MANUFACTURERS CONTROLS, AND ALL OTHER CONTROL DEVICES INDICATED AND/OR REQUIRED FOR UNIT OPERATION AND DDC MONITORING. PROVIDE BACNET INTERFACE WITH THE UNIT MANUFACTURERS CONTROLLER FOR UP TO 10 READ / WRITE POINTS TO DDC SYSTEM. FINAL LISTING OF BACNET CONTROL POINTS SHALL BE DETERMINED DURING THE SUBMITTAL PHASE.

H. WARM-UP CYCLE:

1. UNIT SHALL BE DEENERGIZED THROUGHOUT THE WARM-UP CYCLE.

I. OCCUPIED CYCLE:

1. DEDICATED OUTDOOR AIR SYSTEM SHALL BE ENERGIZED AND PLACED INTO THE OCCUPIED MODE OF OPERATION THROUGH A SIGNAL FROM THE DDC SYSTEM AND OPERATE UNDER IT'S PACKAGED CONTROLS TO MAINTAIN THE UNIT DISCHARGE THERMOSTAT AND HUMIDISTAT SETPOINTS.

J. UNOCCUPIED CYCLE:

1. DEDICATED OUTDOOR AIR SYSTEM SHALL BE DEENERGIZED THROUGH THE DDC SYSTEM AND PLACED INTO THE UNOCCUPIED MODE OF OPERATION, WITH THE UNOCCUPIED BYPASS DAMPER OPEN AND OA/EA DAMPERS CLOSED THROUGHOUT THE UNOCCUPIED CYCLE.
2. ON A RISE IN SPACE HUMIDITY ABOVE 60 PERCENT RH, AS SENSED BY THE ROOM HUMIDITY SENSOR, UNIT SHALL BE TEMPORARILY ENERGIZED THROUGH THE DDC SYSTEM AND OPERATE UNDER ITS PACKAGED CONTROLS TO MAINTAIN THE UNIT DISCHARGE THERMOSTAT AND HUMIDISTAT SETPOINTS.
3. ONCE THE SPACE RELATIVE HUMIDITY FALLS BELOW 55 PERCENT RH, UNIT OPERATION SHALL BE DEENERGIZED THROUGH THE DDC SYSTEM.

K. SAFETY AND EMERGENCY CONTROL:

1. WHENEVER THE EMERGENCY FAN DISCONNECT SWITCH IS THROWN OR LIMITATIONS ARE EXCEEDED BY ANY AIR DUCT SMOKE DETECTOR OR STATIC PRESSURE SENSOR, THE UNIT SHALL BE DEENERGIZED AND OA AND EA DAMPERS SHALL CLOSE. AN ALARM INDICATING THE SPECIFIC CONDITION SHALL BE SENT TO THE DDC SYSTEM.

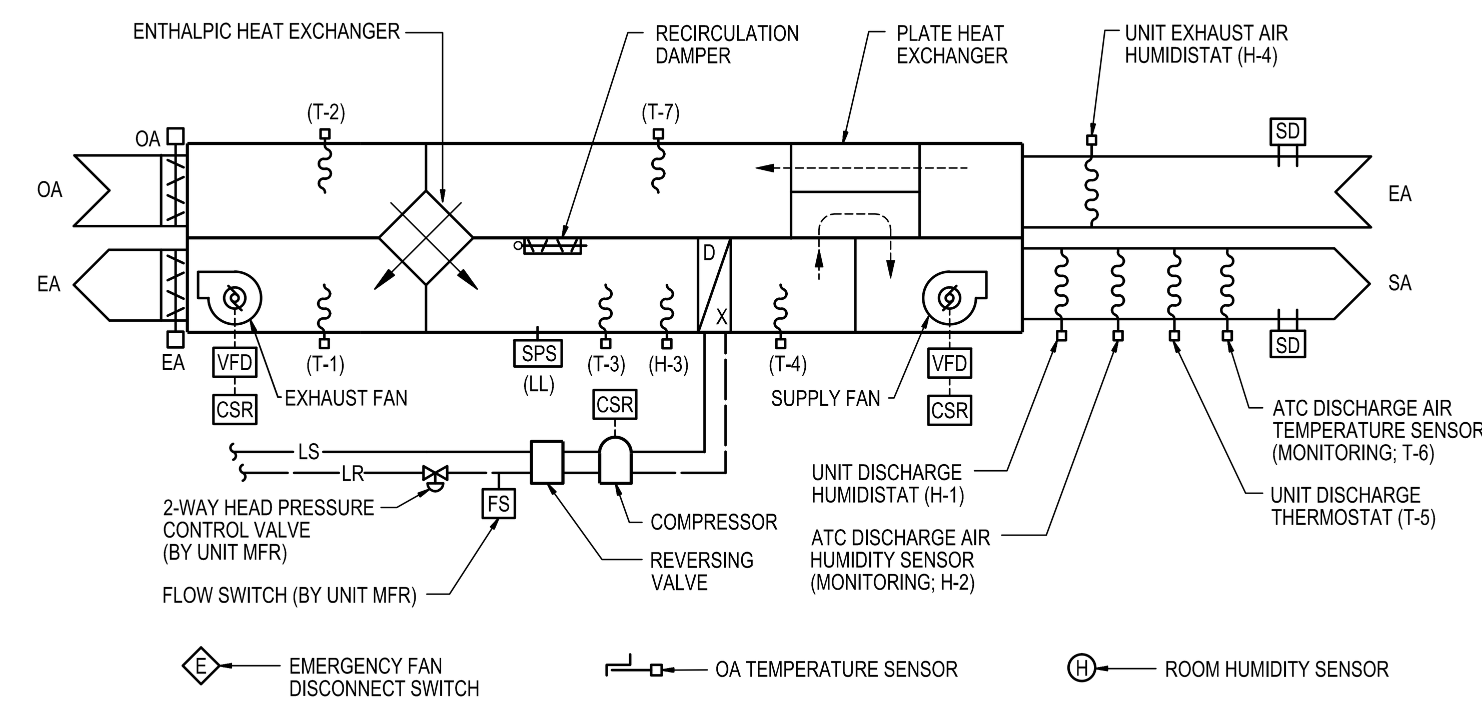

DEDICATED OUTDOOR AIR UNIT (WITH ENTHALPIC HX AND PLATE HX)
(CLASSROOM AREAS; DOAS-1 AND 2)

A. UNIT IS CONTROLLED BY RESPECTIVE ZONE OCCUPIED-UNOCCUPIED SCHEDULE.

B. VFD'S ARE PROVIDED AT SUPPLY AND EXHAUST FANS FOR BALANCING PURPOSES. SUPPLY AND EXHAUST FANS SHALL OPERATE AT A CONSTANT AIRFLOW.

C. UNIT MANUFACTURER SHALL PROVIDE A MICROPROCESSOR BASED UNIT CONTROLLER COMPLETE WITH CONTROLS FOR REFRIGERATION CYCLE, REFRIGERANT SAFETIES, AND TEMPERATURE CONTROL (INCLUDING DAMPER ACTUATORS, TEMPERATURE SENSORS T-1 THROUGH T-4, TEMPERATURE SENSOR T-7, UNIT DISCHARGE THERMOSTAT T-5, AND UNIT HUMIDISTAT H-1, H-3, AND H-4). ROOM HUMIDITY SENSOR, INSERTION TEMPERATURE SENSORS T-6, AND INSERTION HUMIDITY SENSORS H-2 SHALL BE PROVIDED FOR DDC MONITORING FUNCTIONS. LOW LIMIT STATIC PRESSURE SENSOR SHALL BE PROVIDED FOR DDC MONITORING AND SAFETY FUNCTIONS DESCRIBED BELOW.

D. DDC SYSTEM SHALL ENERGIZE/DEENERGIZE UNIT OPERATION, INDEX THE UNIT TO THE APPROPRIATE OPERATIONAL MODE (OCCUPIED/ UNOCCUPIED), MONITOR SUPPLY AND EXHAUST FAN OPERATION VIA A CURRENT SENSING RELAY, REPORT GENERAL ALARM CONDITIONS, MONITOR DISCHARGE AIR TEMPERATURES AND RELATIVE HUMIDITY LEVELS, MONITOR SPACE RELATIVE HUMIDITY LEVELS, AND MONITOR UNIT STATIC PRESSURE LEVELS VIA A LOW LIMIT STATIC PRESSURE SENSOR WITHIN THE UNIT.

E. THE MANUFACTURERS MICROPROCESSOR BASED CONTROLLER SHALL BE INSTALLED WITHIN THE WEATHERPROOF CONTROL ENCLOSURE ON THE EXTERIOR OF THE UNIT CASING. CONTROLLERS SHALL HAVE DISPLAY AND KEYPAD.

F. THE CONTROLS CONTRACTOR SHALL BE RESPONSIBLE FOR INSTALLING AND WIRING ALL CONTROL EQUIPMENT SUPPLIED WITH THE DEDICATED OUTDOOR AIR SYSTEM. PROVIDE ANY SWITCHES AND RELAYS TO ACCOMPLISH THE MANUFACTURERS PACKAGED CONTROL SEQUENCE OF OPERATION.

G. PROVIDE HARDWIRE CONTROL INTERLOCK BETWEEN THE DDC SYSTEM, UNIT MANUFACTURERS CONTROLS, AND ALL OTHER CONTROL DEVICES INDICATED AND/OR REQUIRED FOR UNIT OPERATION AND DDC MONITORING. PROVIDE BACNET INTERFACE WITH THE UNIT MANUFACTURERS CONTROLLER FOR UP TO 10 READ / WRITE POINTS (PER DOAS UNIT) TO DDC SYSTEM. FINAL LISTING OF BACNET CONTROL POINTS SHALL BE DETERMINED DURING THE SUBMITTAL PHASE.

H. WARM-UP CYCLE:

1. UNIT SHALL BE DEENERGIZED THROUGHOUT THE WARM-UP CYCLE.

I. OCCUPIED CYCLE:

1. DEDICATED OUTDOOR AIR SYSTEM SHALL BE ENERGIZED THROUGH A SIGNAL FROM THE DDC SYSTEM AND PLACED INTO THE OCCUPIED MODE OF OPERATION THROUGH A SIGNAL FROM THE DDC SYSTEM. UNIT SHALL OPERATE UNDER IT'S PACKAGED CONTROLS TO MAINTAIN THE UNIT DISCHARGE THERMOSTAT AND HUMIDISTAT SETPOINTS.

J. UNOCCUPIED CYCLE:

1. DEDICATED OUTDOOR AIR SYSTEM SHALL BE DEENERGIZED THROUGH THE DDC SYSTEM AND PLACED INTO THE UNOCCUPIED MODE OF OPERATION, WITH THE RECIRCULATION DAMPER OPEN AND OA/EA DAMPERS CLOSED THROUGHOUT THE UNOCCUPIED CYCLE.
2. ON A RISE IN SPACE HUMIDITY ABOVE 60 PERCENT RH, AS SENSED BY THE ROOM HUMIDITY SENSOR, UNIT SHALL BE TEMPORARILY ENERGIZED THROUGH THE DDC SYSTEM AND OPERATE UNDER ITS PACKAGED CONTROLS TO MAINTAIN THE UNIT DISCHARGE THERMOSTAT AND HUMIDISTAT SETPOINTS.
3. ONCE THE SPACE RELATIVE HUMIDITY FALLS BELOW 55 PERCENT RH, UNIT OPERATION SHALL BE DEENERGIZED THROUGH THE DDC SYSTEM.

K. SAFETY AND EMERGENCY CONTROL:

1. WHENEVER THE EMERGENCY FAN DISCONNECT SWITCH IS THROWN OR LIMITATIONS ARE EXCEEDED BY ANY AIR DUCT SMOKE DETECTOR OR STATIC PRESSURE SENSOR, THE UNIT SHALL BE DEENERGIZED AND OA AND EA DAMPERS SHALL CLOSE. AN ALARM INDICATING THE SPECIFIC CONDITION SHALL BE SENT TO THE DDC SYSTEM.

DDC - INPUT/OUTPUT POINT SCHEDULE

SYSTEM APPARATUS OR AREA POINT DESCRIPTION	INPUT TO DDC – ANALOG: TEMPERATURE	PRESSURE	CFM	GPM	RELATIVE HUMIDITY	POSITION	CO2 DIFFERENTIAL	SPEED	INPUT TO DDC – BINARY: STATUS	CURRENT SENSING RELAY	SMOKE DETECTORS	FREEZESTAT	EMERGENCY SWITCH	FILTER DP	END SWITCH	LOCAL SWITCH ACTIVATION	DIFFERENTIAL-PRESSURE SWITCH	SELECTOR SWITCH	ALARM	OUTPUT FROM DDC – ANALOG: SETPOINT ADJUSTMENT	POSITION	HUMIDITY	OUTPUT FROM DDC – BINARY: OFF/ON	OPEN-CLOSE	HEATING-COOLING	SYSTEM FEATURES – ALARMS: FAILURE	HIGH ANALOG	LOW ANALOG	HIGH BINARY	HIGH BINARY	FAULT (GENERAL)	SYSTEM FEATURES – PROGRAMS: TIME SCHEDULING (OCC/UNOCC)	LEAD/LAG	MORNING WARM UP (OPTIMUM START)	GENERAL: COLOR GRAPHICS	INTERFACE W/ EQUIPMENT CONTROLS	SUPPLEMENTARY NOTES
DOMESTIC + KITCHEN HW SYSTEMS																																X			X		BOTH 110 F AND 140 F SYSTEMS
HW CIRCULATOR PUMP									X	X													X														TYP OF 2
INSERTION TEMPERATURE SENSOR	X																			X																	
ENERGY RECOVERY UNIT											X		X																			X		X	X		ERU-1 AND 2
UNIT ENABLE/DISABLE																							X														
MODE (WARM-UP/OCC/UNOCC)																																X		X			
SUPPLY FAN									X	X																											MONITORING ONLY
RETURN FAN									X	X																											MONITORING ONLY
GENERAL UNIT ALARM																			X												X						MONITORING AND ALARM ONLY
ROOM TEMPERATURE SENSOR	X																			X							X	X									
ROOM HUMIDITY SENSOR					X															X							X										
DISCHARGE TEMPERATURE SENSOR	X																																				MONITORING ONLY
DISCHARGE HUMIDITY SENSOR					X																																MONITORING ONLY
INTERFACE W/ PACKAGED CONTROLS																																				X	VIA BACNET PROTOCOL

NOTES:

© 2016 James Posey Associates, Inc.

James Posey Associates
Engineering Your Vision
Mechanical & Electrical Engineers
jamesposey.com
tel 410-265-6100
fax 410-298-9820
3112 Lord Baltimore Drive
Baltimore, MD 21244

Professional Certification. I hereby certify that these documents were prepared or approved by me, and that I am a duly licensed professional engineer under the laws of the State of Maryland, License No. 33986, Expiration date: 01-16-2017.

STATE OF MARYLAND · MICHAEL PATRICK SHERREN · 33986 · PROFESSIONAL ENGINEER

JPA PROJECT NO. 6542-15

11720 Beltsville Drive
Suite 600
Calverton, MD 20705
Tel: 301.595.1000
www.grimmandparker.com
G+P GRIMM AND PARKER

GP #21541

AUTOMATIC TEMPERATURE CONTROLS

LANSDOWNE ELEMENTARY SCHOOL
2301 ALMA ROAD, BALTIMORE, MD

DATE	DESCRIPTION
10/7/16	ADD NO. 1

M-7.3

11/17/16
BID SET

© GRIMM AND PARKER, P.C. 2014

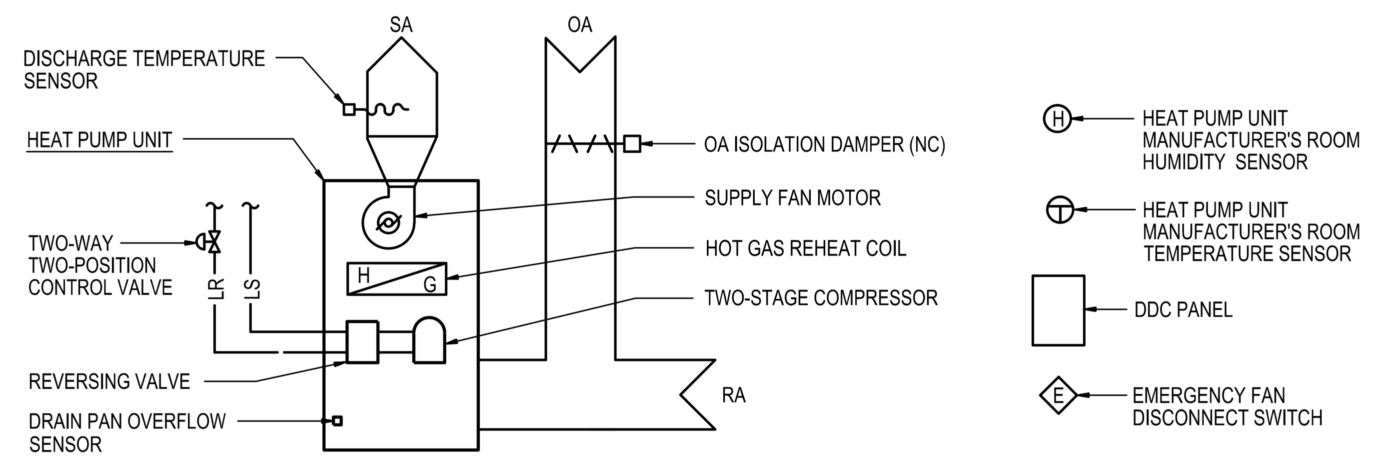

TYPICAL VERTICAL HEAT PUMP UNIT (WITH HOT GAS REHEAT AND OA)

(WITH TWO-STAGE TYPE COMPRESSORS; HPU-1 AND HPU-2 ONLY)

A. GENERAL

1. HEAT PUMP UNIT OPERATION IS CONTROLLED BY THE RESPECTIVE ZONE OCCUPIED-UNOCCUPIED SCHEDULING AND SHALL BE ENERGIZED THROUGH THE DDC SYSTEM ONLY ONCE BUILDING GEOTHERMAL LOOP PUMPS ARE PROVEN ENERGIZED.
2. HEAT PUMP UNIT MANUFACTURER SHALL PROVIDE PACKAGED CONTROLLER FOR GENERAL UNIT OPERATION , TEMPERATURE, AND HUMIDITY CONTROL FUNCTIONS. MANUFACTURER'S PACKAGED CONTROLLER SHALL BE PROVIDED WITH BACNET PROTOCOL FOR INTERFACE WITH THE DDC SYSTEM.
3. TWO-WAY TWO-POSITION LR CONTROL VALVE SHALL BE PROVIDED BY ATC. CONTROL VALVES PROVIDED BY UNIT MANUFACTURER ARE NOT ACCEPTABLE. CONTROL VALVE SHALL BE CONNECTED TO THE HEAT PUMP UNIT MANUFACTURER'S PACKAGED CONTROLLER FOR REQUIRED VALVE OPERATION DESCRIBED WITHIN THIS SEQUENCE OF OPERATION.
4. DISCHARGE TEMPERATURE SENSOR SHALL SEND SIGNAL TO THE DDC SYSTEM FOR MONITORING.
5. GENERAL COMPRESSOR OPERATIONAL REQUIREMENTS: COMPRESSOR OPERATION SHALL BE CONTROLLED BY THE HEAT PUMP UNIT MANUFACTURER'S PACKAGED CONTROLLER. UPON A CALL FOR COMPRESSOR OPERATION, THE CONTROL VALVE SHALL BE COMMANDED OPEN. ONCE VALVE IS PROVEN OPEN THROUGH AN END SWITCH LOCATED ON THE CONTROL VALVE, COMPRESSOR OPERATION SHALL BE ENABLED. COMPRESSOR SHALL CYCLE IN RESPONSE TO THE ROOM TEMPERATURE SENSOR. PROOF OF COMPRESSOR OFF STATUS (VIA A CURRENT RELAY) IS REQUIRED PRIOR TO CLOSING VALVE. MANUFACTURERS CONTROL SHALL PROVIDE FOR COMPRESSOR ON/OFF TIME DELAY WHEN THE UNIT IS INITIALLY ENERGIZED, MANUAL RESET, SWITCHED BETWEEN MODES, OR CYCLED WITHIN A SINGLE MODE.
6. GENERAL REVERSING VALVE OPERATIONAL REQUIREMENTS: REVERSING VALVE OPERATION SHALL BE CONTROLLED BY THE HEAT PUMP UNIT MANUFACTURER'S PACKAGED CONTROLLER. REVERSING VALVE SHALL BE ENERGIZED IN COOLING MODE. ONCE ENERGIZED FOR COOLING, IT SHALL STAY ENERGIZED UNTIL HEATING IS ENABLED. IN THE EVENT OF A POWER FAILURE, REVERSING VALVE SHALL FAIL TO HEATING MODE. MANUFACTURER'S CONTROL SHALL DELAY REVERSING VALVE OPERATION AFTER COMPRESSOR SHUTDOWN TO REDUCE NOISE DUE TO REFRIGERANT MIGRATION.
7. OA DAMPER SHALL OPEN WHEN UNIT IS OPERATING IN THE OCCUPIED CYCLE. CLOSE DAMPER AT ALL OTHER TIMES.

B. WARM-UP CYCLE (OPTIMUM START):

1. WARM-UP CYCLE (OPTIMUM START FUNCTION) SHALL ONLY BE ENABLED WHEN THE ROOM TEMPERATURE IS BELOW THE OCCUPIED HEATING SETPOINT. IF ROOM TEMPERATURE IS ABOVE OCCUPIED HEATING SETPOINT, HEAT PUMP UNIT COMPRESSOR SHALL REMAIN DEENERGIZED AND UNIT SUPPLY FAN SHALL BE ENERGIZED UNDER "FAN-ONLY" OPERATION 20 MINUTES (ADJUSTABLE) PRIOR TO OCCUPANCY.
2. HEAT PUMP UNITS WITHIN A PARTICULAR CONTROL ZONE SHALL BE RANDOMLY STARTED WITH 5-10 SECOND DELAYS BETWEEN EACH START TO PREVENT ALL UNITS WITHIN A ZONE FROM ENERGIZING AT THE SAME TIME.
3. WHEN THE ROOM TEMPERATURE IS BELOW THE OCCUPIED HEATING SETPOINT, THE OPTIMUM START FUNCTION OF THE DDC SYSTEM SHALL PLACE THE HEAT PUMP UNIT MANUFACTURER'S CONTROLLER INTO THE OCCUPIED CYCLE "HEATING" MODE OF OPERATION. THE OPTIMUM START CONTROL FUNCTION SHALL PROVIDE A SPACE TEMPERATURE WITHIN 1 DEGREES OF THE OCCUPIED SETPOINT BY THE OCCUPIED TIME. IF ADEQUATE SPACE TEMPERATURE IS NOT ACHIEVED BY THE OCCUPIED TIME, AN ALARM SHALL BE GENERATED THROUGH THE DDC SYSTEM AND THE UNIT SHALL BE INDEXED TO THE OCCUPIED CYCLE OF OPERATION DESCRIBED BELOW.

C. OCCUPIED CYCLE:

1. HEAT PUMP UNIT MANUFACTURER'S PACKAGED CONTROLLER SHALL BE PROVIDED WITH FOUR DISTINCT OPERATIONAL MODES THAT INCLUDE "FAN-ONLY", "COOLING", "DEHUMIDIFICATION", OR "HEATING". REQUIRED MODE OF OPERATION SHALL BE BASED ON THE ROOM TEMPERATURE AND HUMIDITY SENSOR ASSOCIATED WITH THAT PARTICULAR HEAT PUMP UNIT.
2. "FAN-ONLY" MODE OF OPERATION:
   a. WHEN SPACE TEMPERATURE IS ABOVE THE ROOM TEMPERATURE SENSORS HEATING SETPOINT AND BELOW THE ROOM TEMPERATURE SENSORS COOLING SETPOINT, THE HEAT PUMP UNIT SHALL BE INDEXED TO THE "FAN-ONLY" MODE OF OPERATION BY THE MANUFACTURER'S PACKAGED CONTROLLER.
   b. SUPPLY FAN UNIT SHALL BE ENERGIZED, RUN CONTINUOUSLY, AND BE INDEXED TO THE "FAN-ONLY" SPEED SETTING.
   c. THE HEAT PUMP UNIT COMPRESSOR SHALL BE DEENERGIZED AND ASSOCIATED TWO-WAY HEAT PUMP LOOP CONTROL VALVE SHALL BE CLOSED THROUGHOUT "FAN-ONLY" OPERATION.
3. "COOLING" MODE OF OPERATION:
   a. WHEN SPACE TEMPERATURE RISES ABOVE THE ROOM TEMPERATURE SENSORS COOING SETPOINT, HEAT PUMP UNIT SHALL BE INDEXED TO THE "COOLING" MODE OF OPERATION BY THE MANUFACTURER'S PACKAGED CONTROLLER.
   b. REVERSING VALVE SHALL BE POSITIONED FOR COOLING OPERATION.
   c. HEAT PUMP UNIT SUPPLY FAN AND COMPRESSOR SHALL BE ENERGIZED AND OPERATE AS DESCRIBED BELOW:
      1. TWO-WAY CONTROL VALVE SHALL BE PROVEN OPEN PRIOR TO ENERGIZING COMPRESSOR. ONCE PROVEN OPEN AND AFTER A 60-SECOND DELAY (ADJUSTABLE), COMPRESSOR SHALL BE ENERGIZED AS DESCRIBED BELOW.
      2. HEAT PUMP UNIT SUPPLY FAN SHALL BE INDEXED TO THE "STAGE 1" FAN SPEED SETTING AND THE COMPRESSOR SHALL BE INDEXED TO THE "STAGE 1" COOLING SETTING.
      3. ON A CONTINUED RISE IN SPACE TEMPERATURE ABOVE THE ROOM TEMPERATURE SENSORS COOLING SETPOINT, THE HEAT PUMP UNIT SUPPLY FAN AND COMPRESSOR SHALL BE INDEXED TO THEIR "STAGE 2" SETTINGS.
   d. ONCE THE ROOM TEMPERATURE FALLS BELOW THE COOLING SETPOINT OF THE ROOM TEMPERATURE SENSOR, COMPRESSOR SHALL BE DEENERGIZED, TWO-WAY CONTROL VALVE SHALL CLOSE, AND HEAT PUMP UNIT MODE OF OPERATION SHALL REVERT FROM "COOLING" TO "FAN-ONLY" OPERATION AS DESCRIBED ABOVE.
4. "DEHUMIFICATION" MODE OF OPERATION:
   a. WHEN SPACE RELATIVE HUMIDITY RISES ABOVE THE ROOM HUMIDITY SENSORS HIGH LIMIT SETPOINT (60-PERCENT RH; ADJUSTABLE), HEAT PUMP UNIT SHALL BE INDEXED TO THE "DEHUMIFICATION" MODE OF OPERATION BY THE MANUFACTURER'S PACKAGED CONTROLLER.
   b. REVERSING VALVE SHALL BE POSITIONED FOR COOLING OPERATION.
   c. HEAT PUMP UNIT SUPPLY FAN AND COMPRESSOR SHALL BE ENERGIZED AND OPERATE AS DESCRIBED BELOW:
      1. TWO-WAY CONTROL VALVE SHALL BE PROVEN OPEN PRIOR TO ENERGIZING COMPRESSOR. ONCE PROVEN OPEN AND AFTER A 60-SECOND DELAY (ADJUSTABLE), COMPRESSOR SHALL BE ENERGIZED AS DESCRIBED BELOW.
      2. UNIT SUPPLY FAN AND COMPRESSOR SHALL BE ENERGIZED AND INDEXED TO THEIR STAGE "2" SETTINGS. HOT GAS REHEAT COIL CONTROL VALVE SHALL OPEN AND OPERATE TO MAINTAIN THE UNIT DISCHARGE TEMPERATURE SETPOINT (70 DEGREES F).
   d. ONCE THE ROOM HUMIDITY FALLS BELOW SETPOINT, COMPRESSOR SHALL BE DEENERGIZED, TWO-WAY CONTROL VALVE SHALL CLOSE, AND HEAT PUMP UNIT MODE OF OPERATION SHALL REVERT FROM "DEHUMIDIFICATION" TO "FAN-ONLY" OPERATION AS DESCRIBED ABOVE.
5. "HEATING" MODE OF OPERATION:
   a. WHEN SPACE TEMPERATURE FALLS BELOW THE ROOM TEMPERATURE SENSORS HEATING SETPOINT, HEAT PUMP UNIT SHALL BE INDEXED TO THE "HEATING" MODE OF OPERATION BY THE MANUFACTURER'S PACKAGED CONTROLLER.
   b. REVERSING VALVE SHALL BE POSITIONED FOR HEATING OPERATION.
   c. HEAT PUMP UNIT SUPPLY FAN AND COMPRESSOR SHALL BE ENERGIZED AND OPERATE AS DESCRIBED BELOW:
      1. TWO-WAY CONTROL VALVE SHALL BE PROVEN OPEN PRIOR TO ENERGIZING COMPRESSOR. ONCE PROVEN OPEN AND AFTER A 60-SECOND DELAY (ADJUSTABLE), COMPRESSOR SHALL BE ENERGIZED AS DESCRIBED BELOW.
      2. HEAT PUMP UNIT SUPPLY FAN AND COMPRESSOR SHALL BE INDEXED TO THEIR "STAGE 1" HEATING SETTINGS.
      3. ON A CONTINUED FALL IN SPACE TEMPERATURE BELOW THE ROOM TEMPERATURE SENSORS HEATING SETPOINT, THE HEAT PUMP UNIT SUPPLY FAN AND COMPRESSOR SHALL BE INDEXED TO THEIR "STAGE 2" SETTINGS.
   d. ONCE THE ROOM TEMPERATURE RISES ABOVE THE HEATING SETPOINT OF THE ROOM TEMPERATURE SENSOR, COMPRESSOR SHALL BE DEENERGIZED, TWO-WAY CONTROL VALVE SHALL CLOSE, AND HEAT PUMP UNIT MODE OF OPERATION SHALL REVERT FROM "HEATING" TO "FAN-ONLY" OPERATION AS DESCRIBED ABOVE.

D. UNOCCUPIED CYCLE:

1. HEAT PUMP UNIT SUPPLY FAN AND COMPRESSOR SHALL NORMALLY BE DEENERGIZED AND TWO-WAY CONTROL VALVE SHALL NORMALLY BE CLOSED DURING THE UNOCCUPIED CYCLE, UNLESS THE ROOM TEMPERATURE FALLS BELOW THE UNOCCUPIED HEATING SETPOINT OF THE ROOM TEMPERATURE SENSOR.
2. ON A FALL IN SPACE TEMPERATURE BELOW THE UNOCCUPIED HEATING SETPOINT OF THE ROOM TEMPERATURE SENSOR, HEAT PUMP UNIT SHALL BE TEMPORARILY INDEXED TO THE "HEATING MODE" OF OPERATION, AS DESCRIBED IN THE OCCUPIED CYCLE (NOTE THAT DURING THE UNOCCUPIED CYCLE, THE UNIT SHALL BE INDEXED OFF AND NOT TO THE "FAN-ONLY" MODE OF OPERATION ONCE THE ROOM TEMPERATURE SENSORS UNOCCUPIED HEATING SETPOINT IS SATISFIED).

E. SAFETY CONTROLS:

1. SAFETY CONTROL FUNCTIONS SHALL BE SIMILAR TO OTHER HEAT PUMP UNITS. REFER TO DRAWING M-7.2 FOR DETAILS AND REQUIREMENTS.

© 2016 James Posey Associates, Inc.

DDC - INPUT/OUTPUT POINT SCHEDULE

SYSTEM APPARATUS OR AREA POINT DESCRIPTION	INPUT TO DDC																					OUTPUT FROM DDC								SYSTEM FEATURES														GENERAL			SUPPLEMENTARY NOTES
	ANALOG									BINARY												ANALOG					BINARY			ALARMS							PROGRAMS										
	TEMPERATURE	PRESSURE	CFM	GPM	RELATIVE HUMIDITY	POSITION	CO2 DIFFERENTIAL	SPEED		STATUS	CURRENT SENSING RELAY	SMOKE DETECTORS	FREEZESTAT	EMERGENCY SWITCH	FILTER DP	END SWITCH	LOCAL SWITCH ACTIVATION	DIFFERENTIAL-PRESSURE SWITCH	SELECTOR SWITCH	ALARM		SETPOINT ADJUSTMENT	POSITION	HUMIDITY			OFF/ON	OPEN-CLOSE	HEATING-COOLING	FAILURE	HIGH ANALOG	LOW ANALOG	HIGH BINARY	HIGH BINARY	FAULT (GENERAL)		TIME SCHEDULING (OCC/UNOCC)	LEAD/LAG	MORNING WARM UP (OPTIMUM START)					COLOR GRAPHICS	INTERFACE W/ EQUIPMENT CONTROLS		
GLOBAL POINTS																																												X			
OA TEMPERATURE	X																																														
EMERGENCY FAN DISCONNECT														X																																	
GEOTHERMAL HEAT PUMP LOOP																																												X			
GEOTHERMAL PUMP										X	X																			X								X									P-1 AND P-2
GEOTHERMAL PUMP VFD								X		X										X							X								X												
DIFFERENTIAL PRESSURE SENSORS		X																				X									X	X															
BYPASS VALVE																X							X																								
DDC FLOW METER				X																		X																									
INSERTION TEMPERATURE SENSORS	X																															X															MONITORING AND ALARM ONLY
HPU W/ 2-STAGE COMPRESSOR														X																							X		X					X			TYPICAL; EXCLUDES HPU-1, 2, AND 34
SUPPLY FAN										X																																					MONITORING ONLY
ROOM TEMPERATURE SENSOR	X																					X									X	X															
DISCHARGE TEMPERATURE SENSOR	X																																														MONITORING ONLY
LR CONTROL VALVE																X																															
COMPRESSOR STAGE 1										X																																					MONITORING ONLY
COMPRESSOR STAGE 2										X																																					MONITORING ONLY
DRAIN OVERFLOW SENSOR										X																									X												
INTERFACE W/ PACKAGED CONTROLS																																													X		VIA BACNET PROTOCOL
HPU W/ 1-STAGE COMPRESSOR														X																							X		X					X			HPU-34 ONLY
SUPPLY FAN										X																																					MONITORING ONLY
ROOM TEMPERATURE SENSOR	X																					X									X	X															
DISCHARGE TEMPERATURE SENSOR	X																																														MONITORING ONLY
LR CONTROL VALVE																X																															
COMPRESSOR STAGE 1										X																																					MONITORING ONLY
DRAIN OVERFLOW SENSOR										X																									X												
INTERFACE W/ PACKAGED CONTROLS																																													X		VIA BACNET PROTOCOL
HPU W/ 2-STAGE COMPRESSOR + HGRH														X																							X							X			HPU-1 AND 2 ONLY
SUPPLY FAN										X																																					MONITORING ONLY
OA DAMPER																X												X																			
ROOM HUMIDITY SENSOR					X																	X									X																
ROOM TEMPERATURE SENSOR	X																					X									X	X															
DISCHARGE TEMPERATURE SENSOR	X																																														MONITORING ONLY
LR CONTROL VALVE																X																															
COMPRESSOR STAGE 1										X																																					MONITORING ONLY
COMPRESSOR STAGE 2										X																																					MONITORING ONLY
DRAIN OVERFLOW SENSOR										X																									X												
INTERFACE W/ PACKAGED CONTROLS																																													X		VIA BACNET PROTOCOL
VRF SYSTEMS																																												X			
CENTRAL SYSTEM CONTROLLER																											X										X		X						X		VIA BACNET PROTOCOL
ROOM TEMPERATURE	X																					X									X	X															
EF WITH TEMP SENSOR & OA DAMPER																																												X			FAN SEQUENCE "A"
EXHAUST FAN										X	X																X																				
ROOM TEMPERATURE SENSOR	X																					X									X	X															
OA DAMPER																X												X																			
EF WITH TEMP SENSOR																																												X			FAN SEQUENCE "B"
EXHAUST FAN										X	X																X																				
ROOM TEMPERATURE SENSOR	X																					X									X																
EF WITH OCC/UNOCC CONTROL																																					X							X			FAN SEQUENCE "C"
EXHAUST FAN										X	X																X																				
KILN EXHAUST FAN																																												X			FAN SEQUENCE "D"
EXHAUST FAN										X	X																X																				
KILN CONTROLLER										X																																			X		
EA DAMPER																X												X																			
ELEVATOR SUMP PUMP										X										X															X									X	X		
HIGH TEMP REFRIG/FREEZER ALARM	X																														X													X			
DUCTLESS SPLIT SYSTEMS																																												X			
ROOM TEMPERATURE SENSOR	X																														X																MONITOR AND ALARM ONLY
SINGLE-ZONE VAV ROOFTOP HPU												X		X																							X		X					X			RHPU-1 AND 2
UNIT ENABLE/DISABLE																											X																				
MODE (WARM-UP/OCC/UNOCC)																																					X		X								
SUPPLY FAN										X	X																																				MONITORING ONLY
EXHAUST FAN										X	X																																				RHPU-2 ONLY
GENERAL UNIT ALARM																				X																											MONITORING AND ALARM ONLY
ROOM TEMPERATURE SENSOR																						X									X	X															
ROOM HUMIDITY SENSOR					X																										X																
DISCHARGE TEMPERATURE SENSOR	X																																														MONITORING ONLY
INTERFACE W/ PACKAGED CONTROLS																																													X		VIA BACNET PROTOCOL
DEDICATED OUTDOOR AIR UNIT												X		X																							X							X			DOAS-1, 2, AND 3
UNIT ENABLE/DISABLE																											X																				
MODE (OCC/UNOCC)																																					X										
SUPPLY FAN										X	X																																				MONITORING ONLY
EXHAUST FAN										X	X																																				MONITORING ONLY
ENTHALPY WHEEL										X	X																																				DOAS-3 ONLY
GENERAL UNIT ALARM																				X															X												MONITORING AND ALARM ONLY
DISCHARGE TEMPERATURE SENSOR	X																																														MONITORING ONLY
DISCHARGE HUMIDITY SENSOR					X																																										MONITORING ONLY
ROOM HUMIDITY SENSOR					X																	X									X																
INTERFACE W/ PACKAGED CONTROLS																																													X		VIA BACNET PROTOCOL

James Posey Associates
Engineering Your Vision
Mechanical & Electrical Engineers
jamesposey.com
tel 410-265-6100
fax 410-298-9820
3112 Lord Baltimore Drive
Baltimore, MD 21244

Professional Certification. I hereby certify that these documents were prepared or approved by me, and that I am a duly licensed professional engineer under the laws of the State of Maryland, License No. 33686, Expiration date: 01-16-2017.

STATE OF MARYLAND · MICHAEL SHERREN · PROFESSIONAL ENGINEER · 33686

JPA PROJECT NO. 6542-15

11720 Beltsville Drive
Suite 600
Calverton, MD 20705
Tel: 301.595.1000
www.grimmandparker.com
G+P GRIMM AND PARKER

GP #21541

AUTOMATIC TEMPERATURE CONTROLS

LANSDOWNE ELEMENTARY SCHOOL
2301 ALMA ROAD, BALTIMORE, MD

DATE	DESCRIPTION

M-7.4

11/17/16
BID SET

November 10, 2016 6:38 a.m.

© GRIMM AND PARKER, P.C. 2014

BUILDING DESIGN CRITERIA

SANITARY DRAINAGE FIXTURE UNITS:	537 DFU'S
MAXIMUM PEAK DOMESTIC WATER DEMAND:	187 GPM
DOMESTIC HOT WATER LOAD:	235 GPH
(KW INPUT AT MAX DELTA T)	56.8 KW
MAXIMUM PEAK DOMESTIC HOT WATER DEMAND:	48 GPM
SLOPE OF BUILDING SANITARY SEWER: (UNLESS OTHERWISE NOTED ON PLANS)	2%
SLOPE OF BUILDING STORM SEWER: (UNLESS OTHERWISE NOTED ON PLANS)	2%

PLUMBING AND FIRE PROTECTION SYMBOLS AND ABBREVIATIONS

- SOIL, WASTE, OR SANITARY PIPE; SAN
- GI — GREASE INTERCEPTOR SANITARY PIPE; GI SAN
- STORM WATER PIPE; SW
- OFD — STORM WATER OVERFLOW DRAIN PIPE; OFD
- CD — CONDENSATE DRAIN PIPE; CD
- D — DRAIN LINE
- PC — PUMPED CONDENSATE DRAIN PIPE;PC
- PD — PUMPED DRAIN PIPE;PD
- SD — SPRINKLER DRAIN PIPE;SD
- VENT PIPE; VP
- DOMESTIC COLD WATER PIPE; CW
- 110 — DOMESTIC HOT WATER PIPE 110 DEGREES F; HW
- 140 — DOMESTIC HOT WATER PIPE 140 DEGREES F; HW
- 110 — DOMESTIC HOT WATER RETURN PIPE 110 DEGREES F; HWR
- 140 — DOMESTIC HOT WATER RETURN PIPE 140 DEGREES F; HWR
- T — DOMESTIC TEMPERED WATER PIPE 80–100 DEGREES F; TW
- PIPE UP/PIPE OFF TOP OF MAIN
- PIPE DOWN/PIPE OFF BOTTOM OF MAIN
- ROOF OVERFLOW SPOUT
- CO — CLEANOUT; CO
- BACK WATER VALVE; BWV
- FLOOR DRAIN, FD
- ROOF DRAIN; RD
- OVERFLOW ROOF DRAIN; RD
- WALL HYDRANT; WH
- HOSE BIBB; HB
- FIRE DEPARTMENT CONNECTION (SIAMESE); FDC
- PIPE CAP OR PLUG
- UNION
- FLANGED PIPE CONNECTION
- PIPE ANCHOR
- PIPE GUIDE
- FLEXIBLE CONNECTION (PIPING)
- CONCENTRIC REDUCER
- ECCENTRIC REDUCER
- FLOW DIRECTION ARROW
- STRAINER
- SHUT–OFF VALVE
- VALVE IN VERTICAL PIPE
- INDICATING TYPE SHUT–OFF VALVE WITH MONITORING SWITCH
- BALANCING VALVE; BV
- CHECK VALVE; CV (ARROWHEAD INDICATES DIRECTION OF FLOW)
- BACKFLOW PREVENTER
- WATER HAMMER ARRESTER
- PRESSURE REDUCING VALVE
- GAUGE COCK
- VACUUM BREAKER
- AUTOMATIC AIR VENT
- P–TRAP
- 0°–100° F — THERMOMETER (NUMERALS INDICATE GRADUATION RANGE)
- 0–60 PSI — PRESSURE GAUGE (NUMERALS INDICATE GRADUATION RANGE)
- 3/9 — DETAIL OR DIAGRAM NO. 3 SHOWN ON DRAWING NO. 9
- POINT OF CONNECTION, NEW TO EXISTING
- 1 — SYMBOL FOR SPECIFIC NOTE. NOTE APPLIES TO DRAWING ON WHICH IT OCCURS.
- ø — INDICATES DIAMETER OR PHASE

AAV	AUTOMATIC AIR VENT
AC	AIR CONDITIONING
A/D	ACCESS DOOR
ABV	ABOVE
ADA	AMERICANS WITH DISABILITIES ACT
AHU	AIR HANDLING UNIT
AF	ABOVE FINISHED FLOOR
ANSI	AMERICAN NATIONAL STANDARDS INSTITUTE
ARCH	ARCHITECT
ASME	AMERICAN SOCIETY OF MECHANICAL ENGINEERS
ASSE	AMERICAN SOCIETY OF SANITARY EGINEERS
ASSOC	ASSOCIATED
ASTM	AMERICAN SOCIETY FOR TESTING MATERIALS
ATPP	AUTOMATIC TRAP PRIMING PANEL
ATPV	AUTOMATIC INLINE TRAP PRIMING VALVE
BLDG	BUILDING
BOP	BOTTOM OF PIPE
BTM	BOTTOM
BTWN	BETWEEN
BLW	BELOW
BWV	BACKWATER VALVE
CD	CONDENSATE DRAIN
CI	CAST IRON
CLG	CEILING
CO	CLEANOUT
CONC	CONCRETE
CONN	CONNECT, CONNECTION
CONT'N	CONTINUATION
COORD	COORDINATE
CW	COLD WATER
CW (NP)	COLD WATER NON–POTABLE
D	DEPTH OR DRAIN LINE
DESIG	DESIGNATION
DFU	DRAINAGE FIXTURE UNIT
DIA	DIAMETER
DIV	DIVISION
DN	DOWN
DOAS	DEDICATED OUTDOOR AIR SYSTEM
DSS	DUCTLESS SPLIT SYSTEM
DWG	DRAWING
DWH	DOMESTIC WATER HEATER
DHWET	DOMESTIC HOT WATER EXPANSION TANK
DHWRP	DOMESTIC HOT WATER RETURN PUMP
EF	EXHAUST FAN
ELEV	ELEVATION, ELEVATOR
ERU	ENERGY RECOVERY UNIT
ESP	ELEVATOR SUMP PUMP
ET	EXPANSION TANK
EWC	ELECTRIC WATER COOLER
F	FIXTURE
FU	FIXTURE UNITS
FD	FLOOR DRAIN
FDA	FOOD AND DRUG ADMINISTRATION
FDC	FIRE DEPARTMENT CONNECTION
FHV	FIRE HOSE VALVE
FIN	FINISHED
FL	FLOOR
FT	FEET
FT HD	FEET OF HEAD
FU	FIXTURE UNIT
GALV	GALVANIZED
GI	GREASE INTERCEPTOR SANITARY PIPE
GPD	GALLONS PER DAY
GPF	GALLONS PER FLUSH
GPH	GALLONS PER HOUR
GPM	GALLONS PER MINUTE
H	HEIGHT
HB	HOSE BIB
HP	HORSEPOWER
HPU	HEAT PUMP UNIT
HW	HOT WATER
IN	INCH, INCHES
INV	INVERT
KW	KILOWATT
L	LENGTH
MFR	MANUFACTURER
MAX	MAXIMUM
MECH	MECHANICAL
MIN	MINIMUM
MTD	MOUNTED
NC	NORMALLY CLOSED
NEMA	NATIONAL ELECTRICAL MANUFACTURER'S ASSOCIATION
NFPA	NATIONAL FIRE PROTECTION ASSOCIATION
NO.	NUMBER
NO	NORMALLY OPEN
NSF	NATIONAL SANITIATION FOUNDATION
OA	OUTSIDE AIR
O.D.	OUTSIDE DIAMETER
OFD	OVERFLOW DRAIN
OSD	OPEN SITE DRAIN
PC	PUMPED CONDENSATE
PD	PRESSURE DROP
PH	PHASE
PSI	POUNDS PER SQUARE INCH
PSIG	POUNDS PER SQUARE INCH GAUGE
PVC	POLYVINYL CHLORIDE PIPING
RD	ROOF DRAIN
RHPU	ROOFTOP HEAT PUMP UNIT
RH	ROOF HYDRANT
REQ'D	REQUIRED
RPM	REVOLUTIONS PER MINUTE
RTU	ROOF TOP UNIT
SAN	SANITARY
SCH	SCHEDULE
SF	SQUARE FOOT/SQUARE FEET
SF–E	SQUARE FOOT/SQUARE FEET (EMERGENCY)
SHWR	SHOWER
SPEC	SPECIFICATION
STRUCT	STRUCTURAL
S/S	STAINLESS STEEL
SW	STORM WATER
T&P	TEMPERATURE AND PRESSURE
TEMP	TEMPERATURE
TMV	THERMOSTATIC MIXING VALVE
TYP	TYPICAL
TW	TEMPERED WATER
U.L.	UNDERWRITER'S LABORATORY
VCT	VINYL COMPOSITION TILE
VFD	VARIABLE FREQUENCY DRIVE
V	VOLT
VP	VENT PIPE
VRT	VARIABLE REFRIGERANT TERMINAL
VTR	VENT THRU ROOF
WC	WATER CLOSET
WCCU	WATER COOLED CONDENSING UNIT
WHA	WATER HAMMER ARRESTOR
W	WIDTH
W/	WITH
W/O	WITH OUT
WH	WALL HYDRANT

James Posey Associates
Engineering Your Vision
3112 Lord Baltimore Drive
Baltimore, MD 21244
tel 410-265-6100
fax 410-298-9820
Mechanical & Electrical Engineers
jamesposey.com

Professional Certification. I hereby certify that these documents were prepared or approved by me, and that I am a duly licensed professional engineer under the laws of the state of Maryland, License No. 35985, Expiration date: 01-16-2017.

STATE OF MARYLAND — MICHAEL J. SHERREN — No. 35985 — PROFESSIONAL ENGINEER

JPA PROJECT NO. 6542-15

11720 Beltsville Drive
Suite 600
Calverton, MD 20705
Tel: 301.595.1000
www.grimmandparker.com
G+P GRIMM AND PARKER

GP #21541

LEGEND, SYSMBOLS AND ABBREVIATIONS

LANSDOWNE ELEMENTARY SCHOOL
2301 ALMA ROAD, BALTIMORE, MD

DATE	DESCRIPTION

P-0.1

11/17/16
BID SET

November 11, 2016 11:11 a.m.
Plotted by: ...

© 2016 James Posey Associates, Inc.

© GRIMM AND PARKER, P.C. 2014

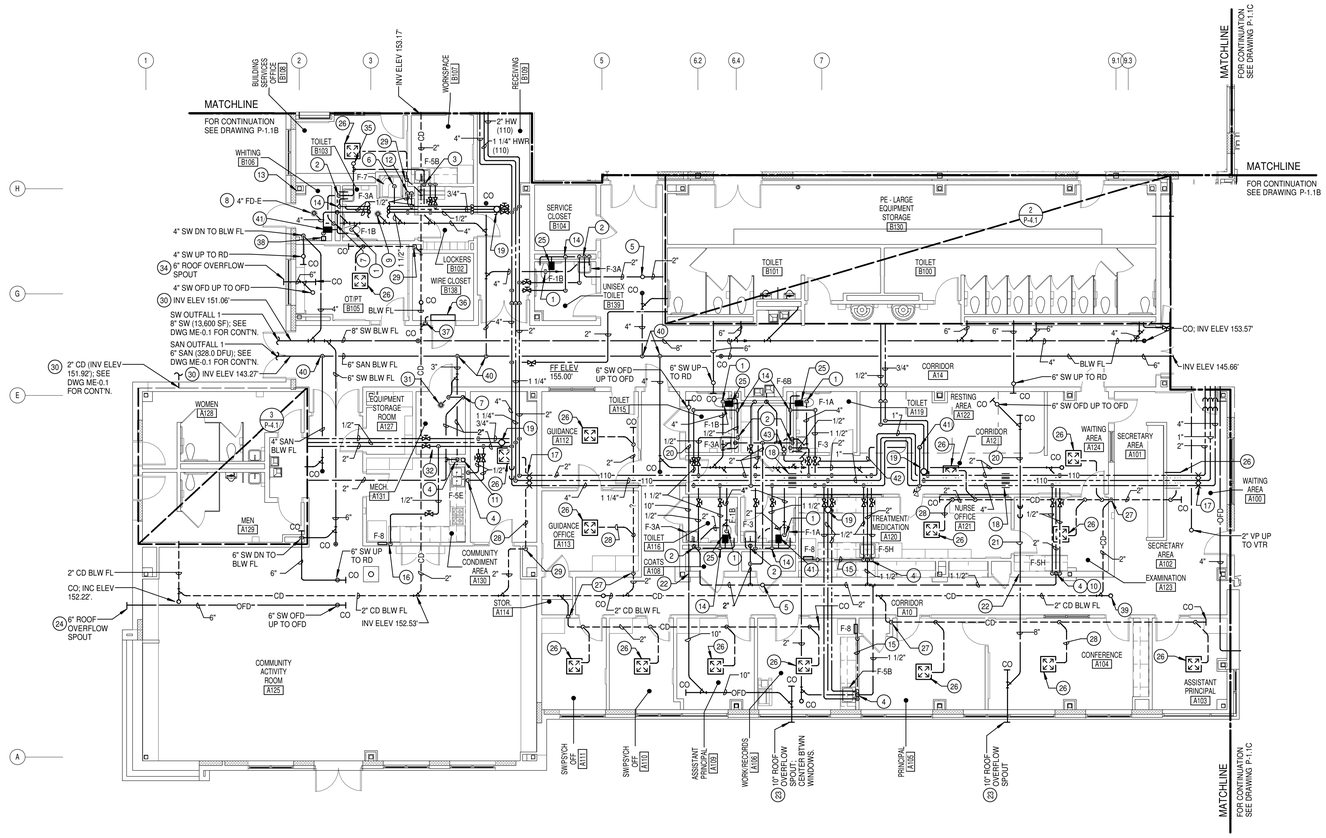

PARTIAL FIRST FLOOR PLAN - AREA A - PLUMBING

SCALE: 1/8" = 1'-0"

GENERAL NOTES:

A. INFORMATION SHOWN ON THIS DRAWING PERTAINING TO EXISTING CONDITIONS HAS BEEN OBTAINED FROM AVAILABLE BUILDING DRAWINGS OR GENERAL FIELD OBSERVATIONS AND MAY NOT INDICATE EXISTING CONDITIONS IN DETAIL OR DIMENSION. DETERMINE EXISTING CONDITIONS PRIOR TO FABRICATION OR PERFORMANCE OF ANY WORK. SHOULD CONDITIONS BE DISCOVERED THAT PREVENT EXECUTION OF THE WORK AS INDICATED, IMMEDIATELY NOTIFY THE ARCHITECT IN WRITING AND AWAIT DIRECTION BEFORE PROCEEDING WITH THE WORK.

B. DO NOT LOCATE DUCTWORK OR PIPING ABOVE ELECTRICAL PANELS OR EQUIPMENT.

C. PIPING SHALL BE INSTALLED BETWEEN AND/OR BELOW JOISTS/BEAMS IN NO CASE SHALL PIPING PENETRATE STRUCTURAL JOISTS OR BEAMS. UNLESS OTHERWISE NOTED.

D. FINISHED FLOOR ELEVATIONS SHOWN ON FLOOR PLANS SHALL BE CONFIRMED WITH ELEVATIONS SHOWN ON ARCHITECTURAL AND STRUCTURAL DRAWINGS PRIOR TO INSTALLATION OF PLUMBING SYSTEMS.

E. SEE DRAWING P-0.1 FOR PLUMBING LEGEND, SYMBOLS AND ABBREVIATIONS.

F. SANITARY PIPING BELOW FLOOR SLAB SHALL BE SLOPED AT 2% AND/OR TO INVERT ELEVATIONS SHOWN.

G. STORM WATER PIPING BELOW FLOOR SLAB SHALL BE SLOPED AT 2% AND/OR TO INVERT ELEVATIONS SHOWN.

H. CONDENSATE PIPING BELOW FLOOR SLAB SHALL BE SLOPED AT 1% AND/OR TO INVERT ELEVATIONS SHOWN.

I. SANITARY PIPING ABOVE FLOOR SLAB SHALL BE SLOPED BASED ON SIZE. PIPING 2.5 INCHES AND SMALLER SHALL BE SLOPED AT 2% AND PIPING 3 INCHES AND LARGER SHALL BE SLOPED AT 1%.

J. STORM WATER PIPING ABOVE FLOOR SLAB SHALL BE SLOPED AT 1%, UNLESS NOTED OTHERWISE.

K. CONDENSATE PIPING ABOVE FLOOR SLAB SHALL BE SLOPED AT 1%, UNLESS NOTED OTHERWISE.

L. SANITARY AND STORM WATER PIPING BELOW SLAB ON GRADE SHALL BE PVC SCH 40 DWV PIPING AND FITTINGS (BASE BID); CAST IRON HUB/SPIGOT PIPE AND GASKETED FITTINGS (ADD ALTERNATE NO 8).

M. PVC PIPING INSTALLED BELOW FLOOR SLAB SHALL BE INSTALLED WITH GREAT CARE AND EXCELLENT CRAFTSMANSHIP. PIPING SHALL BE INSTALLED UPON A PROPERLY PREPARED BED CONFORMING TO THE REQUIREMENTS OF ASTM D2321 "UNDERGROUND INSTALLATION OF FLEXIBLE THERMOPLASTIC SEWER PIPE".

N. ALL ISOLATION AND BALANCING VALVES SHALL BE INSTALLED IN A READILY ACCESSIBLE LOCATION WITHOUT OBSTRUCTION.

SPECIFIC NOTES:

1. 4" SAN BELOW FLOOR UP TO WC OUTLET.
2. 2" SAN DN TO BELOW FLOOR AND 2" VP UP.
3. 2" SAN DN TO BELOW FLOOR, 2" VP UP , 1/2" HW AND CW DN.
4. 2" SAN DN TO BELOW FLOOR, 1 1/2" VP UP, 1/2" HW AND CW DN.
5. 3" VP UP TO 3" VTR.
6. 2" SAN BELOW FLOOR UP TO SHOWER DRAIN OUTLET.
7. 2" VP DN TO BELOW FLOOR.
8. INV ELEV 153.50'.
9. 4" FD-A.
10. INV ELEV 153.80'
11. 4" RADON VENT DN THRU FLOOR AND UP THRU ROOF; SEE DETAIL 2/P-5.2
12. 1/2" HW AND CW DN; CONNECT TO SHOWER PANEL.
13. 3/4" CW DN TO WH.
14. 1 1/2" CW AND 1/2" HW DN.
15. 1/2" CW IN WALL; CONNECT TO ICE MAKER SUPPLY BOX F-8.
16. 1/2" CW DN; CONNECT TO ICE MAKER SUPPLY BOX F-8.
17. PIPE ANCHORS; SEE DETAIL 9/P-5.2
18. PIPE GUIDES; SEE DETAIL 9/P-5.2
19. BALANCING VALVE; BALANCE FOR 0.5 GPM.
20. INSTALL PIPING AS HIGH AS POSSIBLE UP IN BEAM SPACE.
21. OFFSET PIPING DN TO BELOW BEAM.
22. INSTALL PIPING TIGHT TO BOTTOM OF BEAM.
23. PIPING TERMINATES AT ELEV 11.5'± (BOP) AF.
24. PIPING TERMINATES AT ELEV 14.5' ± (BOP) AF.
25. WHA-A; INSTALL BEHIND 12"x12" ACCESS DOOR.
26. VARIABLE REFRIGERANT TERMINAL; SEE DIAGRAM 6/P-5.2
27. 2" CD DN.
28. 1" PC FROM VRT (TYPICAL).
29. 1" CD DN; TRANSITION TO 2" CD APPROXIMATELY 12" AF PRIOR TO GOING BELOW FLOOR.
30. PIPING PASSES THROUGH FOUNDATION WALL INSIDE PIPE SLEEVE. PIPE SLEEVE SHALL BE 2 PIPE SIZES LARGER THAN SERVICE PIPE.
31. 3" FD-B.
32. WCCU-1
    SEE MECH DRAWINGS.
33. INSTALL 24" ABOVE FINISHED GRADE.
34. PIPING TERMINATES AT ELEV 12'-1"± (BOP) AF.
35. 2" VP UP TO 2" VTR.
36. DUCTLESS SPLIT SYSTEM
    (INDOOR UNIT) SEE DETAIL 7/P-5.2
37. 1/2" CD DN; TRANSITION TO 2" CD PRIOR TO GOING BELOW FLOOR.
38. ATPV-15; SERVES FLOOR DRAINS IN B103, B106 AND A131. SEE DETAIL 2/P-5.3
39. CO; INVERT ELEV 153.48'.
40. BRANCH SANITARY PIPE SHALL CONNECT TO BUILDING SANITARY SEWER WITH MINIMUM 4 FT LONG 45° CONNECTION.
41. 3/4" CW UP THRU ROOF TO SERVE ROOF HYDRANT.
42. 1/8" D TUBING FROM DRAIN PORT ON BOTTOM OF ROOF HYDRANT ASSEMBLY; INSTALL ABOVE CEILING AND TERMINATE TO OSD IN STORAGE UNIT.
43. 2" OSD WITH P-TRAP AND TRAP PRIMING CONNECTION; INSTALL ON WALL AND CONNECT TO SAN PIPING SERVING LAVATORY. PROVIDE AUTOMATIC TRAP PRIMING CONNECTION FROM CW SUPPLY TO LAVATORY.

8 4 0 8 16
SCALE: 1/8" = 1'-0"

KEYPLAN
NOT TO SCALE
NORTH

© 2016 James Posey Associates, Inc.

James Posey Associates
Engineering your vision
Mechanical & Electrical Engineers
jamesposey.com
3112 Lord Baltimore Drive
Baltimore, MD 21244
tel 410-265-6100
fax 410-298-9820

Professional Certification. I hereby certify that these documents were prepared or approved by me, and that I am a duly licensed professional engineer under the laws of the state of Maryland. License No. 33986. Expiration date: 01-16-2017.

JPA PROJECT NO. 6546-15

GRIMM AND PARKER
11720 Beltsville Drive
Suite 600
Calverton, MD 20705
Tel: 301.595.1000
www.grimmandparker.com

GP #21541

PARTIAL FIRST FLOOR PLAN - AREA A - PLUMBING

LANSDOWNE ELEMENTARY SCHOOL
2301 ALMA ROAD, BALTIMORE, MD

DATE	DESCRIPTION
10/7/16	ADD NO.1

P-1.1A

11/17/16
BID SET

© GRIMM AND PARKER, P.C. 2014

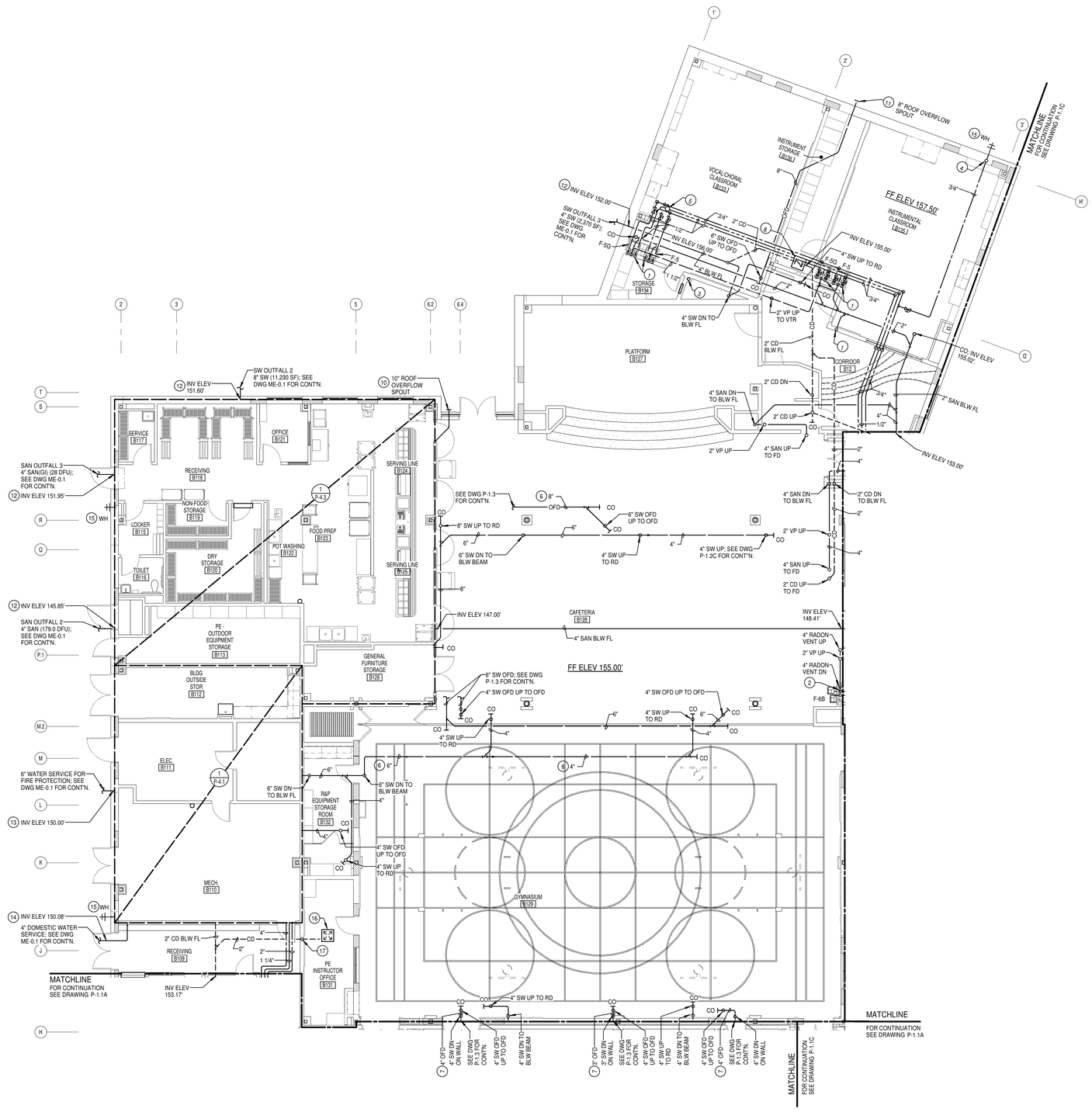

PARTIAL FIRST FLOOR PLAN - AREA B - PLUMBING

SCALE: 1/8" = 1'-0"

GENERAL NOTES:

A. INFORMATION SHOWN ON THIS DRAWING PERTAINING TO EXISTING CONDITIONS HAS BEEN OBTAINED FROM AVAILABLE BUILDING DRAWINGS OR GENERAL FIELD OBSERVATIONS AND MAY NOT INDICATE EXISTING CONDITIONS IN DETAIL OR DIMENSION. DETERMINE EXISTING CONDITIONS PRIOR TO FABRICATION OR PERFORMANCE OF ANY WORK. SHOULD CONDITIONS BE DISCOVERED THAT PREVENT EXECUTION OF THE WORK AS INDICATED, IMMEDIATELY NOTIFY THE ARCHITECT IN WRITING AND AWAIT DIRECTION BEFORE PROCEEDING WITH THE WORK.

B. DO NOT LOCATE DUCTWORK OR PIPING ABOVE ELECTRICAL PANELS OR EQUIPMENT.

C. PIPING SHALL BE INSTALLED BETWEEN AND/OR BELOW JOISTS/BEAMS IN NO CASE SHALL PIPING PENETRATE STRUCTURAL JOISTS OR BEAMS. UNLESS OTHERWISE NOTED.

D. FINISHED FLOOR ELEVATIONS SHOWN ON FLOOR PLANS SHALL BE CONFIRMED WITH ELEVATIONS SHOWN ON ARCHITECTURAL AND STRUCTURAL DRAWINGS PRIOR TO INSTALLATION OF PLUMBING SYSTEMS.

E. SEE DRAWING P-0.1 FOR PLUMBING LEGEND, SYMBOLS AND ABBREVIATIONS.

F. SANITARY PIPING BELOW FLOOR SLAB SHALL BE SLOPED AT 2% AND/OR TO INVERT ELEVATIONS SHOWN.

G. STORM WATER PIPING BELOW FLOOR SLAB SHALL BE SLOPED AT 2% AND/OR TO INVERT ELEVATIONS SHOWN.

H. CONDENSATE PIPING BELOW FLOOR SLAB SHALL BE SLOPED AT 1% AND/OR TO INVERT ELEVATIONS SHOWN.

I. SANITARY PIPING ABOVE FLOOR SLAB SHALL BE SLOPED BASED ON SIZE. PIPING 2.5 INCHES AND SMALLER SHALL BE SLOPED AT 2% AND PIPING 3 INCHES AND LARGER SHALL BE SLOPED AT 1%.

J. STORM WATER PIPING ABOVE FLOOR SLAB SHALL BE SLOPED AT 1%, UNLESS NOTED OTHERWISE.

K. CONDENSATE PIPING ABOVE FLOOR SLAB SHALL BE SLOPED AT 1%, UNLESS NOTED OTHERWISE.

L. SANITARY AND STORM WATER PIPING BELOW SLAB ON GRADE SHALL BE PVC SCH 40 DWV PIPING AND FITTINGS (BASE BID); CAST IRON HUB/SPIGOT PIPE AND GASKETED FITTINGS (ADD ALTERNATE NO 8).

M. PVC PIPING INSTALLED BELOW FLOOR SLAB SHALL BE INSTALLED WITH GREAT CARE AND EXCELLENT CRAFTSMANSHIP. PIPING SHALL BE INSTALLED UPON A PROPERLY PREPARED BED CONFORMING TO THE REQUIREMENTS OF ASTM D2321 "UNDERGROUND INSTALLATION OF FLEXIBLE THERMOPLASTIC SEWER PIPE".

N. ALL ISOLATION AND BALANCING VALVES SHALL BE INSTALLED IN A READILY ACCESSIBLE LOCATION WITHOUT OBSTRUCTION.

O. PROVIDE CLEANOUTS AT BASE OF ALL SANITARY AND STORM PIPING MAINS PRIOR TO GOING TO BELOW FLOOR.

SPECIFIC NOTES:

1. 2" SAN DN, 1 1/2" VP UP, 1/2" HW AND CW DN.
2. 2" SAN DN, 1 1/2" VP UP AND 1/2" CW DN.
3. 4" RADON VENT DN THRU FLOOR AND UP THRU ROOF; SEE DETAIL 2/P-5.2
4. 3/4" CW DN TO WH.
5. BALANCING VALVE; BALANCE FOR 0.5 GPM.
6. INSTALL PIPING THRU WEB JOISTS.
7. INSTALL PIPING IN JOIST SPACE.
8. BACKWATER VALVE BELOW FLOOR; PROVIDE 24"x24" FLOOR ACCESS PANEL RECESSED INTO FLOOR AS REQUIRED TO ACCEPT VCT FLOORING.
9. PIPING TERMINATES AT ELEV 23'-9" (BOP) AF.
10. PIPING TERMINATES AT ELEV 12'-5" (BOP) AF.
11. PIPING TERMINATES AT ELEV 16'-4" (BOP) AF.
12. PIPING PASSES THROUGH FOUNDATION WALL INSIDE PIPE SLEEVE. PIPE SLEEVE SHALL BE 2 PIPE SIZES LARGER THAN SERVICE PIPE.
13. SEE DETAIL 3/P-5.1
14. SEE DETAIL 1/P-5.1
15. INSTALL 24" ABOVE FINISHED GRADE.
16. VARIABLE REFRIGERANT TERMINAL; SEE DETAIL 6/P-5.2
17. 1" PC DN; TRANSITION TO 2" CD PRIOR TO GOING BELOW FLOOR.

James Posey Associates
Engineering your vision
Mechanical & Electrical Engineers
jamesposey.com
3112 Lord Baltimore Drive
Baltimore, MD 21244
tel 410-265-6100
fax 410-298-9820

Professional Certification. I hereby certify that these documents were prepared or approved by me, and that I am a duly licensed professional engineer under the laws of the state of Maryland. License number 33968. Expiration date: 01-16-2017.

STATE OF MARYLAND · MICHAEL FREDRICK SUERREN · No. 33968 · PROFESSIONAL ENGINEER

JPA PROJECT NO. 6542-15

11720 Beltsville Drive
Suite 600
Calverton, MD 20705
Tel: 301.595.1000
www.grimmandparker.com
G+P GRIMM AND PARKER

GP #21541

PARTIAL FIRST FLOOR PLAN - AREA B - PLUMBING

LANSDOWNE ELEMENTARY SCHOOL
2301 ALMA ROAD, BALTIMORE, MD

DATE	DESCRIPTION
10/7/16	ADD NO.1

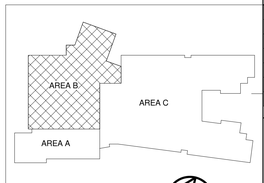

KEYPLAN
NOT TO SCALE

NORTH

8 4 0 8 16
SCALE: 1/8" = 1'-0"

P-1.1B

11/17/16
BID SET

© 2016 James Posey Associates, Inc.

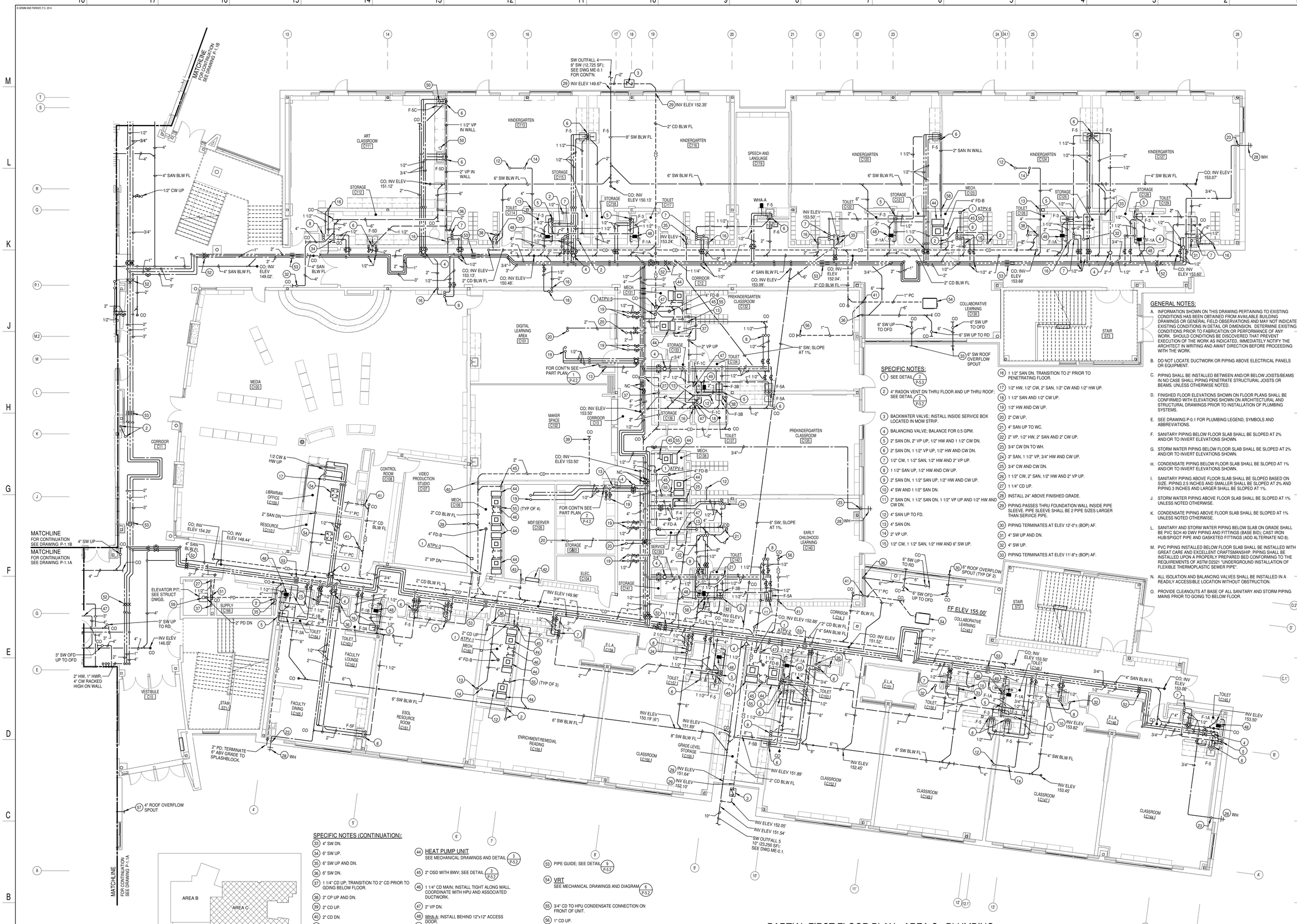

SPECIFIC NOTES:

1. SEE DETAIL 2 P-5.3
2. 4" RADON VENT DN THRU FLOOR AND UP THRU ROOF; SEE DETAIL 2 P-5.2
3. BACKWATER VALVE; INSTALL INSIDE SERVICE BOX LOCATED IN MOW STRIP.
4. BALANCING VALVE; BALANCE FOR 0.5 GPM.
5. 2" SAN DN, 2" VP UP, 1/2" HW AND 1 1/2" CW DN.
6. 2" SAN DN, 1 1/2" VP UP, 1/2" HW AND CW DN.
7. 1/2" CW, 1 1/2" SAN, 1/2" HW AND 2" VP UP.
8. 1 1/2" SAN UP, 1/2" HW AND CW UP.
9. 2" SAN DN, 1 1/2" SAN UP, 1/2" HW AND CW UP.
10. 4" SW AND 1 1/2" SAN DN.
11. 2" SAN DN, 1 1/2" SAN DN, 1 1/2" VP UP AND 1/2" HW AND CW DN.
12. 4" SAN UP TO FD.
13. 4" SAN DN.
14. 2" VP UP.
15. 1/2" CW, 1 1/2" SAN, 1/2" HW AND 6" SW UP.
16. 1 1/2" SAN DN. TRANSITION TO 2" PRIOR TO PENETRATING FLOOR.
17. 1/2" HW, 1/2" CW, 2" SAN, 1/2" CW AND 1/2" HW UP.
18. 1 1/2" SAN AND 1/2" CW UP.
19. 1/2" HW AND CW UP.
20. 2" CW UP.
21. 4" SAN UP TO WC.
22. 2" VP, 1/2" HW, 2" SAN AND 2" CW UP.
23. 3/4" CW DN TO WH.
24. 3" SAN, 1 1/2" VP, 3/4" HW AND CW UP.
25. 3/4" CW AND CW DN.
26. 1 1/2" CW, 2" SAN, 1/2" HW AND 2" VP UP.
27. 1 1/4" CD UP.
28. INSTALL 24" ABOVE FINISHED GRADE.
29. PIPING PASSES THRU FOUNDATION WALL INSIDE PIPE SLEEVE. PIPE SLEEVE SHALL BE 2 PIPE SIZES LARGER THAN SERVICE PIPE.
30. PIPING TERMINATES AT ELEV 12'-0"± (BOP) AF.
31. 4" SW UP AND DN.
32. 4" SW UP.
33. PIPING TERMINATES AT ELEV 11'-8"± (BOP) AF.

GENERAL NOTES:

A. INFORMATION SHOWN ON THIS DRAWING PERTAINING TO EXISTING CONDITIONS HAS BEEN OBTAINED FROM AVAILABLE BUILDING DRAWINGS OR GENERAL FIELD OBSERVATIONS AND MAY NOT INDICATE EXISTING CONDITIONS IN DETAIL OR DIMENSION. DETERMINE EXISTING CONDITIONS PRIOR TO FABRICATION OR PERFORMANCE OF ANY WORK. SHOULD CONDITIONS BE DISCOVERED THAT PREVENT EXECUTION OF THE WORK AS INDICATED, IMMEDIATELY NOTIFY THE ARCHITECT IN WRITING AND AWAIT DIRECTION BEFORE PROCEEDING WITH THE WORK.

B. DO NOT LOCATE DUCTWORK OR PIPING ABOVE ELECTRICAL PANELS OR EQUIPMENT.

C. PIPING SHALL BE INSTALLED BETWEEN AND/OR BELOW JOISTS/BEAMS IN NO CASE SHALL PIPING PENETRATE STRUCTURAL JOISTS OR BEAMS. UNLESS OTHERWISE NOTED.

D. FINISHED FLOOR ELEVATIONS SHOWN ON FLOOR PLANS SHALL BE CONFIRMED WITH ELEVATIONS SHOWN ON ARCHITECTURAL AND STRUCTURAL DRAWINGS PRIOR TO INSTALLATION OF PLUMBING SYSTEMS.

E. SEE DRAWING P-0.1 FOR PLUMBING LEGEND, SYMBOLS AND ABBREVIATIONS.

F. SANITARY PIPING BELOW FLOOR SLAB SHALL BE SLOPED AT 2% AND/OR TO INVERT ELEVATIONS SHOWN.

G. STORM WATER PIPING BELOW FLOOR SLAB SHALL BE SLOPED AT 2% AND/OR TO INVERT ELEVATIONS SHOWN.

H. CONDENSATE PIPING BELOW FLOOR SLAB SHALL BE SLOPED AT 1% AND/OR TO INVERT ELEVATIONS SHOWN.

I. SANITARY PIPING ABOVE FLOOR SLAB SHALL BE SLOPED BASED ON SIZE. PIPING 2.5 INCHES AND SMALLER SHALL BE SLOPED AT 2% AND PIPING 3 INCHES AND LARGER SHALL BE SLOPED AT 1%.

J. STORM WATER PIPING ABOVE FLOOR SLAB SHALL BE SLOPED AT 1% UNLESS NOTED OTHERWISE.

K. CONDENSATE PIPING ABOVE FLOOR SLAB SHALL BE SLOPED AT 1% UNLESS NOTED OTHERWISE.

L. SANITARY AND STORM WATER PIPING BELOW SLAB ON GRADE SHALL BE PVC SCH 40 DWV PIPING AND FITTINGS (BASE BID); CAST IRON HUB/SPIGOT PIPE AND GASKETED FITTINGS (ADD ALTERNATE NO 8).

M. PVC PIPING INSTALLED BELOW FLOOR SLAB SHALL BE INSTALLED WITH GREAT CARE AND EXCELLENT CRAFTSMANSHIP. PIPING SHALL BE INSTALLED UPON A PROPERLY PREPARED BED CONFORMING TO THE REQUIREMENTS OF ASTM D2321 "UNDERGROUND INSTALLATION OF FLEXIBLE THERMOPLASTIC SEWER PIPE".

N. ALL ISOLATION AND BALANCING VALVES SHALL BE INSTALLED IN A READILY ACCESSIBLE LOCATION WITHOUT OBSTRUCTION.

O. PROVIDE CLEANOUTS AT BASE OF ALL SANITARY AND STORM PIPING MAINS PRIOR TO GOING TO BELOW FLOOR.

SPECIFIC NOTES (CONTINUATION):

33. 4" SW DN.
34. 6" SW UP.
35. 6" SW UP AND DN.
36. 6" SW DN.
37. 1 1/4" CD UP; TRANSITION TO 2" CD PRIOR TO GOING BELOW FLOOR.
38. 2" CP UP AND DN.
39. 2" CD UP.
40. 2" CD DN.
41. 1" CD DN. TRANSITION TO 2" CD PRIOR TO PENETRATING FLOOR.
42. DUCTLESS SPLIT SYSTEM (INDOOR UNIT) SEE MECHANICAL DRAWINGS AND DETAIL 7 P-5.2
43. 1/2" CD DN. TRANSITION TO 2" CD PRIOR TO PENETRATING FLOOR.
44. HEAT PUMP UNIT SEE MECHANICAL DRAWINGS AND DETAIL 3 P-5.2
45. 2" OSD WITH BWV; SEE DETAIL 3 P-5.2
46. 1 1/4" CD MAIN; INSTALL TIGHT ALONG WALL. COORDINATE WITH HPU AND ASSOCIATED DUCTWORK.
47. 2" VP DN.
48. WHA-A: INSTALL BEHIND 12"x12" ACCESS DOOR.
49. WHA-B: INSTALL BEHIND 12"x12" ACCESS
50. SOLIDS INTERCEPTOR INSTALL INSIDE CABINET ON FLOOR. SEE DETAIL 8 P-5.1
51. CONTROL AND ANNUNCIATOR PANEL FOR ELEVATOR SUMP PUMP.
52. PIPE ANCHOR; SEE DETAIL 9 P-5.2
53. PIPE GUIDE; SEE DETAIL 9 P-5.2
54. VRT SEE MECHANICAL DRAWINGS AND DIAGRAM 6 P-5.2
55. 3/4" CD TO HPU CONDENSATE CONNECTION ON FRONT OF UNIT.
56. 1" CD UP.
57. PIPING TERMINATES AT ELEV 11'-9" (BOP) AF.
58. 2" SAN DN, 1 1/2" VP UP AND 1/2" CW SERVING EWC.
59. ELEVATOR PIT SUMP PUMP ESP-1 SEE DETAIL 6 P-5.1
60. 2" SAN DN TO BELOW FLOOR.

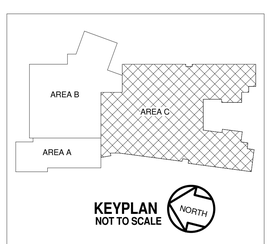

KEYPLAN
NOT TO SCALE

PARTIAL FIRST FLOOR PLAN - AREA C - PLUMBING

SCALE: 1/8" = 1'-0"

8 4 0 8 16

SCALE: 1/8" = 1'-0"

© 2016 James Posey Associates, Inc.

James Posey Associates
Engineering your vision
Mechanical & Electrical Engineers
jamesposey.com
3112 Lord Baltimore Drive
Baltimore, MD 21244
tel 410-265-6100
fax 410-298-9820

Professional Certification.
I hereby certify that these documents were prepared or approved by me, and that I am a duly Licensed Professional Engineer under the laws of the state of Maryland. License No. 33995, Expiration date: 01-16-2017.

JPA PROJECT NO. 6545.15

GRIMM AND PARKER
11720 Beltsville Drive
Suite 600
Calverton, MD 20705
Tel: 301.595.1000
www.grimmandparker.com

GP #21541

PARTIAL FIRST FLOOR PLAN - AREA C - PLUMBING

LANSDOWNE ELEMENTARY SCHOOL
2301 ALMA ROAD, BALTIMORE, MD

DATE	DESCRIPTION
10/7/16	ADD NO.1

P-1.1C

11/17/16
BID SET

© GRIMM AND PARKER, P.C. 2014

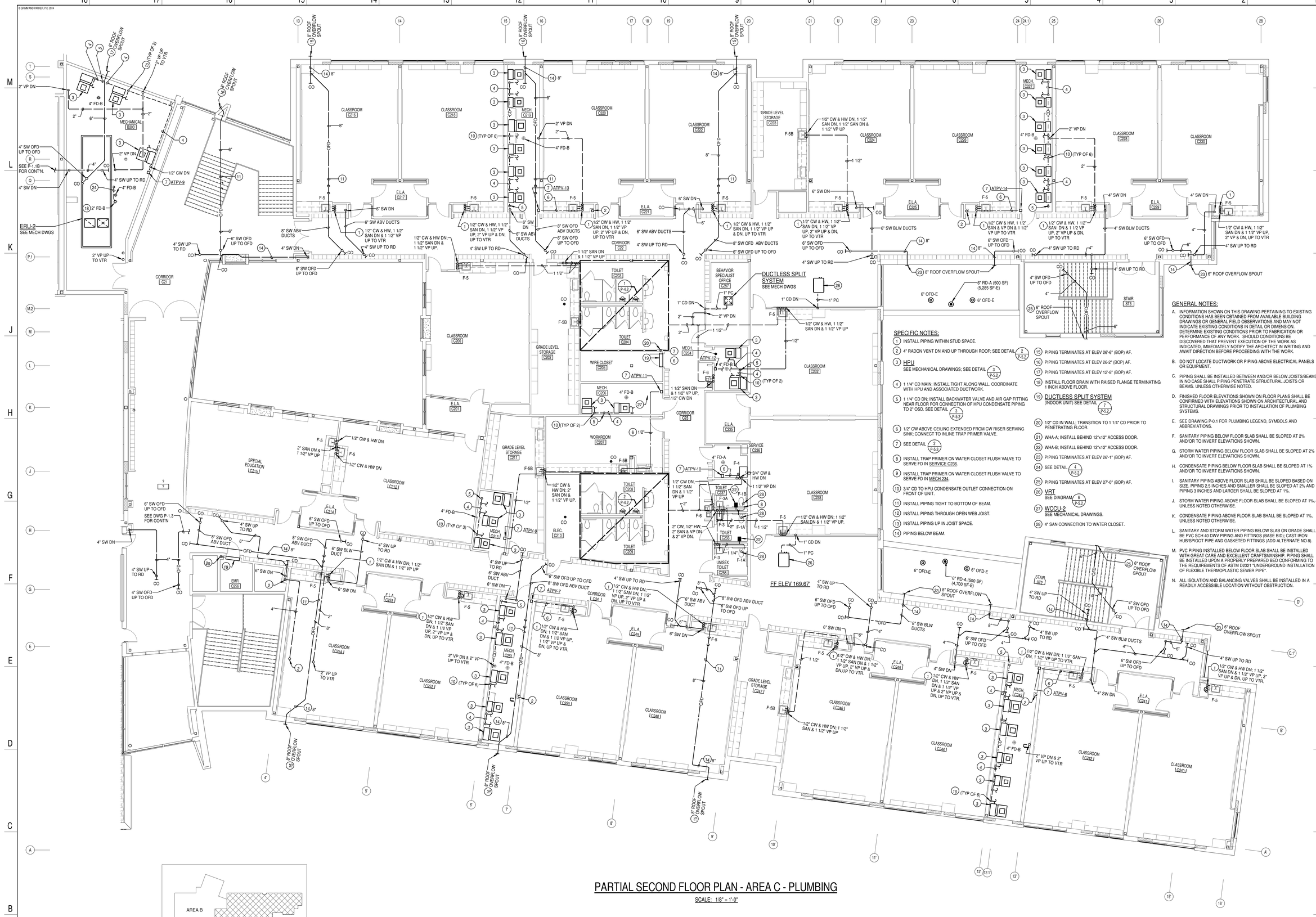

PARTIAL SECOND FLOOR PLAN - AREA C - PLUMBING

SCALE: 1/8" = 1'-0"

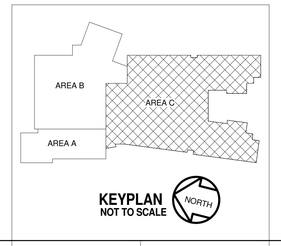

SPECIFIC NOTES:

1. INSTALL PIPING WITHIN STUD SPACE.
2. 4" RADON VENT DN AND UP THROUGH ROOF; SEE DETAIL 2/P-5.2
3. HPU
   SEE MECHANICAL DRAWINGS; SEE DETAIL 3/P-5.2
4. 1 1/4" CD MAIN; INSTALL TIGHT ALONG WALL. COORDINATE WITH HPU AND ASSOCIATED DUCTWORK.
5. 1 1/4" CD DN; INSTALL BACKWATER VALVE AND AIR GAP FITTING NEAR FLOOR FOR CONNECTION OF HPU CONDENSATE PIPING TO 2" OSD. SEE DETAIL 3/P-5.2
6. 1/2" CW ABOVE CEILING EXTENDED FROM CW RISER SERVING SINK; CONNECT TO INLINE TRAP PRIMER VALVE.
7. SEE DETAIL 2/P-5.3
8. INSTALL TRAP PRIMER ON WATER CLOSET FLUSH VALVE TO SERVE FD IN SERVICE C256.
9. INSTALL TRAP PRIMER ON WATER CLOSET FLUSH VALVE TO SERVE FD IN MECH 234.
10. 3/4" CD TO HPU CONDENSATE OUTLET CONNECTION ON FRONT OF UNIT.
11. INSTALL PIPING TIGHT TO BOTTOM OF BEAM.
12. INSTALL PIPING THROUGH OPEN WEB JOIST.
13. INSTALL PIPING UP IN JOIST SPACE.
14. PIPING BELOW BEAM.
15. PIPING TERMINATES AT ELEV 26'-6" (BOP) AF.
16. PIPING TERMINATES AT ELEV 26-2" (BOP) AF.
17. PIPING TERMINATES AT ELEV 12'-8" (BOP) AF.
18. INSTALL FLOOR DRAIN WITH RAISED FLANGE TERMINATING 1 INCH ABOVE FLOOR.
19. DUCTLESS SPLIT SYSTEM
    (INDOOR UNIT) SEE DETAIL 7/P-5.2
20. 1/2" CD IN WALL; TRANSITION TO 1 1/4" CD PRIOR TO PENETRATING FLOOR.
21. WHA-A; INSTALL BEHIND 12"x12" ACCESS DOOR.
22. WHA-B; INSTALL BEHIND 12"x12" ACCESS DOOR.
23. PIPING TERMINATES AT ELEV 26'-1" (BOP) AF.
24. SEE DETAIL 4/P-5.2
25. PIPING TERMINATES AT ELEV 27'-0" (BOP) AF.
26. VRT
    SEE DIAGRAM 6/P-5.2
27. WCCU-2
    SEE MECHANICAL DRAWINGS.
28. 4" SAN CONNECTION TO WATER CLOSET.

GENERAL NOTES:

A. INFORMATION SHOWN ON THIS DRAWING PERTAINING TO EXISTING CONDITIONS HAS BEEN OBTAINED FROM AVAILABLE BUILDING DRAWINGS OR GENERAL FIELD OBSERVATIONS AND MAY NOT INDICATE EXISTING CONDITIONS IN DETAIL OR DIMENSION. DETERMINE EXISTING CONDITIONS PRIOR TO FABRICATION OR PERFORMANCE OF ANY WORK. SHOULD CONDITIONS BE DISCOVERED THAT PREVENT EXECUTION OF THE WORK AS INDICATED, IMMEDIATELY NOTIFY THE ARCHITECT IN WRITING AND AWAIT DIRECTION BEFORE PROCEEDING WITH THE WORK.

B. DO NOT LOCATE DUCTWORK OR PIPING ABOVE ELECTRICAL PANELS OR EQUIPMENT.

C. PIPING SHALL BE INSTALLED BETWEEN AND/OR BELOW JOISTS/BEAMS IN NO CASE SHALL PIPING PENETRATE STRUCTURAL JOISTS OR BEAMS. UNLESS OTHERWISE NOTED.

D. FINISHED FLOOR ELEVATIONS SHOWN ON FLOOR PLANS SHALL BE CONFIRMED WITH ELEVATIONS SHOWN ON ARCHITECTURAL AND STRUCTURAL DRAWINGS PRIOR TO INSTALLATION OF PLUMBING SYSTEMS.

E. SEE DRAWING P-0.1 FOR PLUMBING LEGEND, SYMBOLS AND ABBREVIATIONS.

F. SANITARY PIPING BELOW FLOOR SLAB SHALL BE SLOPED AT 2% AND/OR TO INVERT ELEVATIONS SHOWN.

G. STORM WATER PIPING BELOW FLOOR SLAB SHALL BE SLOPED AT 2% AND/OR TO INVERT ELEVATIONS SHOWN.

H. CONDENSATE PIPING BELOW FLOOR SLAB SHALL BE SLOPED AT 1% AND/OR TO INVERT ELEVATIONS SHOWN.

I. SANITARY PIPING ABOVE FLOOR SLAB SHALL BE SLOPED BASED ON SIZE. PIPING 2.5 INCHES AND SMALLER SHALL BE SLOPED AT 2% AND PIPING 3 INCHES AND LARGER SHALL BE SLOPED AT 1%.

J. STORM WATER PIPING ABOVE FLOOR SLAB SHALL BE SLOPED AT 1% UNLESS NOTED OTHERWISE.

K. CONDENSATE PIPING ABOVE FLOOR SLAB SHALL BE SLOPED AT 1%, UNLESS NOTED OTHERWISE.

L. SANITARY AND STORM WATER PIPING BELOW SLAB ON GRADE SHALL BE PVC SCH 40 DWV PIPING AND FITTINGS (BASE BID); CAST IRON HUB/SPIGOT PIPE AND GASKETED FITTINGS (ADD ALTERNATE NO 8).

M. PVC PIPING INSTALLED BELOW FLOOR SLAB SHALL BE INSTALLED WITH GREAT CARE AND EXCELLENT CRAFTSMANSHIP. PIPING SHALL BE INSTALLED UPON A PROPERLY PREPARED BED CONFORMING TO THE REQUIREMENTS OF ASTM D2321 "UNDERGROUND INSTALLATION OF FLEXIBLE THERMOPLASTIC SEWER PIPE".

N. ALL ISOLATION AND BALANCING VALVES SHALL BE INSTALLED IN A READILY ACCESSIBLE LOCATION WITHOUT OBSTRUCTION.

8 4 0 8 16
SCALE: 1/8" = 1'-0"

© 2016 James Posey Associates, Inc.

James Posey Associates
Engineering Your Vision
Mechanical & Electrical Engineers
jamesposey.com
3112 Lord Baltimore Drive
Baltimore, MD 21244
tel 410-265-6100
fax 410-298-9820

Professional Certification.
I hereby certify that these documents were prepared or approved by me, and that I am a duly licensed professional engineer under the laws of the state of Maryland. License No. 15665, Expiration date: 01-16-2017.

JPA PROJECT NO. 6549-15

GRIMM AND PARKER
11720 Beltsville Drive
Suite 600
Calverton, MD 20705
Tel: 301.595.1000
www.grimmandparker.com

GP #21541

PARTIAL SECOND FLOOR PLAN - AREA C - PLUMBING

LANSDOWNE ELEMENTARY SCHOOL
2301 ALMA ROAD, BALTIMORE, MD

DATE	DESCRIPTION
10/7/16	ADD NO.1

P-1.2C
11/17/16
BID SET

© GRIMM AND PARKER, P.C. 2014

GENERAL NOTES:

A. INFORMATION SHOWN ON THIS DRAWING PERTAINING TO EXISTING CONDITIONS HAS BEEN OBTAINED FROM AVAILABLE BUILDING DRAWINGS OR GENERAL FIELD OBSERVATIONS AND MAY NOT INDICATE EXISTING CONDITIONS IN DETAIL OR DIMENSION. DETERMINE EXISTING CONDITIONS PRIOR TO FABRICATION OR PERFORMANCE OF ANY WORK. SHOULD CONDITIONS BE DISCOVERED THAT PREVENT EXECUTION OF THE WORK AS INDICATED, IMMEDIATELY NOTIFY THE ARCHITECT IN WRITING AND AWAIT DIRECTION BEFORE PROCEEDING WITH THE WORK.

B. SEE DRAWING P-0.1 FOR LEGEND, PLUMBING SYMBOLS AND ABBREVIATIONS.

C. CONDENSATE PIPING SHALL BE SLOPED AT 1%.

D. SEE ARCHITECTURAL DRAWINGS FOR ROOF DRAIN INSTALLATION DETAILS.

E. SEE ARCHITECTURAL DRAWINGS FOR SANITARY VENT PENETRATION DETAILS.

F. ALL VENT TERMINATIONS SHALL BE LOCATED MINIMUM 15 FT FROM OUTDOOR AIR INLET ON ROOFTOP HVAC EQUIPMENT.

SPECIFIC NOTES:

1. SEE DETAIL 2/P-5.2
2. SEE DETAIL 4/P-5.2 AND 5/P-5.2
3. SEE DETAIL 4/P-5.2
4. ROOFTOP PIPE SUPPORT SYSTEM; INSTALL EVERY 5 FT ALONG LENGTH OF PIPE AND EVERY CHANGE OF DIRECTION.
5. PIPING TERMINATES AT ELEV 20'-4"± (BOP) AF.
6. ROOF DRAINS ARE LOCATED BELOW PAVER SYSTEM.
7. PIPING TERMINATES AT ELEV 27'-0"± (BOP) AF.
8. 6" ROOF OVERFLOW SPOUT; PIPING TERMINATES AT ELEV 15'-10"± (BOP) AF.
9. PIPING TERMINATES AT ELEV 22'-4"± (BOP) AF.
10. SW CONDUCTOR HEAD WITH DOWNSPOUT; IF ALTERNATE "RAIN BARREL" IS SELECTED TERMINATE PIPING TO RAIN BARREL. SEE ARCHITECTURAL DRAWINGS.
11. ADD ALTERNATE - "RAIN BARREL" SEE ARCHITECTURAL DRAWINGS.
12. 3" ROOF OVERFLOW SPOUT; PIPING TERMINATES AT ELEV 15'-10"± (BOP) AF.
13. INSTALL PIPING DIRECTLY ADJACENT TO EQUIPMENT CURB.
14. SEE MECHANICAL DRAWINGS.
15. PIPING TERMINATES AT ELEV 26'-0"± (BOP) AF.
16. 3/4" CW DN THRU ROOF MOUNTED PIPE CURB SERVING ROOF HYDRANT.
17. ROOF DRAIN INSPECTION BOX; PROVIDED BY DIV 07. SEE ARCHITECTURAL DRAWINGS

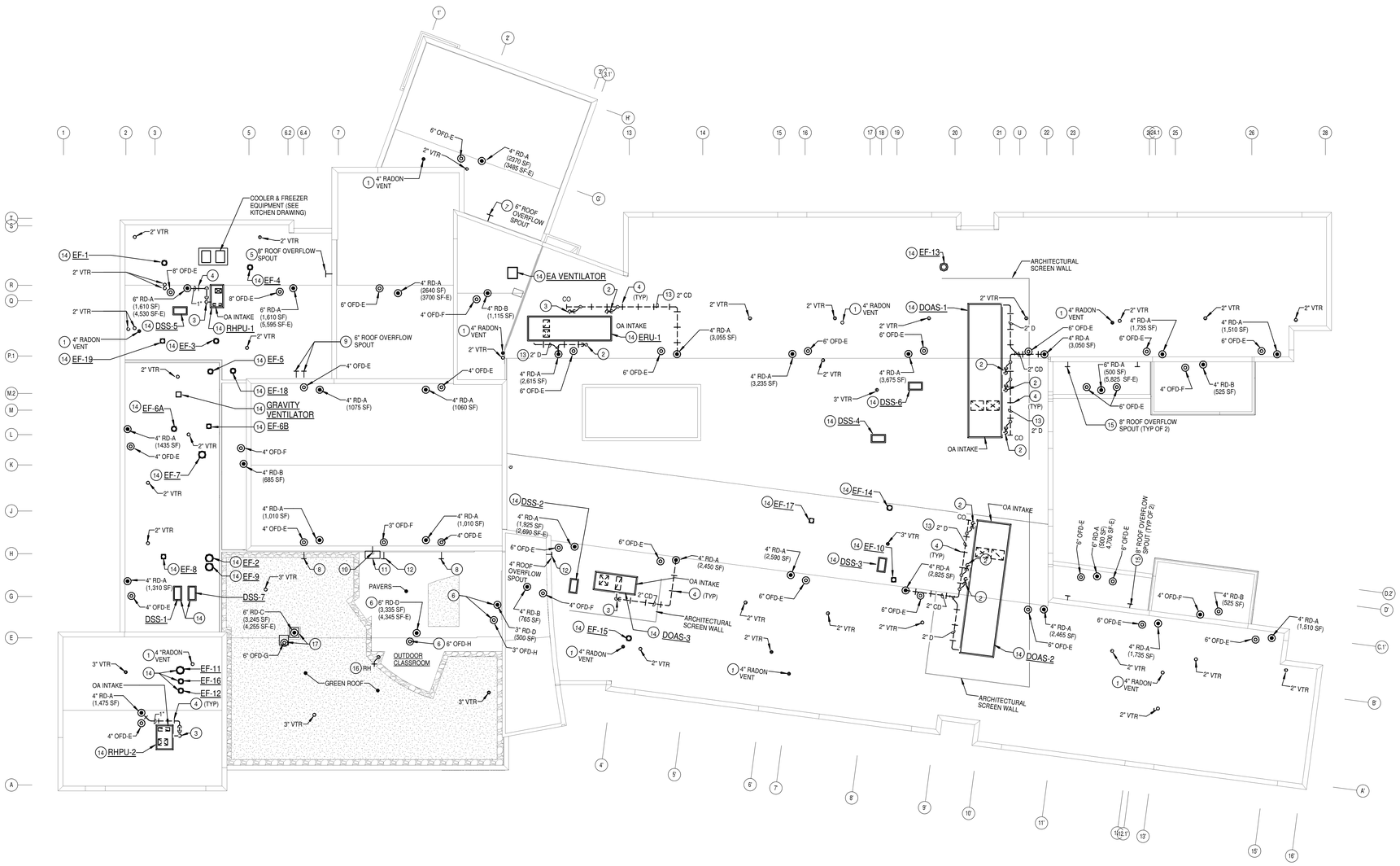

ROOF PLAN - PLUMBING

SCALE: 1/16" = 1'-0"

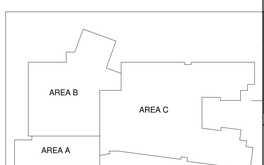

KEYPLAN NOT TO SCALE

NORTH

16 8 0 16 32

SCALE: 1/16" = 1'-0"

James Posey Associates
Engineering your vision
Mechanical & Electrical Engineers
jamesposey.com
3112 Lord Baltimore Drive
Baltimore, MD 21244
tel 410-265-6100
fax 410-298-9820

Professional Certification. I hereby certify that these documents were prepared or approved by me, and that I am a duly licensed professional engineer under the laws of the state of Maryland. License No. 36895, Expiration date: 01-16-2017.

JPA PROJECT NO. 6548-15

11720 Beltsville Drive
Suite 600
Calverton, MD 20705
Tel: 301.595.1000
www.grimmandparker.com
GRIMM AND PARKER

GP #21541

ROOF PLAN - PLUMBING

LANSDOWNE ELEMENTARY SCHOOL
2301 ALMA ROAD, BALTIMORE, MD

DATE	DESCRIPTION
10/7/16	ADD NO.1

P-1.3

11/17/16
BID SET

© 2016 James Posey Associates, Inc.

© GRIMM AND PARKER, P.C. 2014

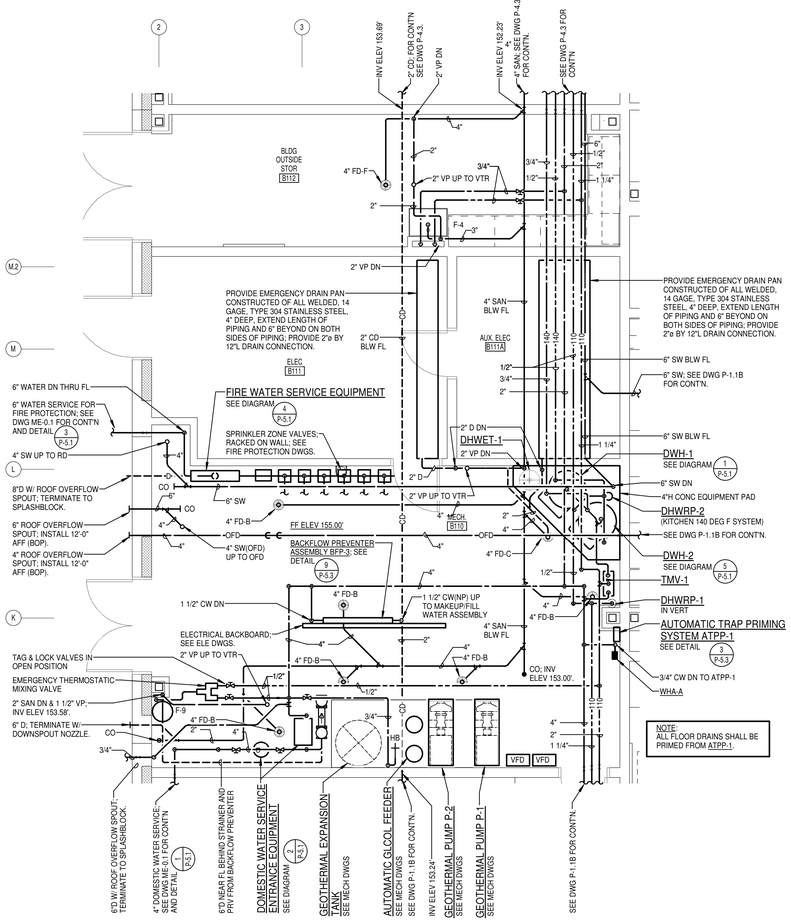

1 P-4.1 PART PLAN - MECHANICAL ROOM B110
SCALE: 1/4" = 1'-0"

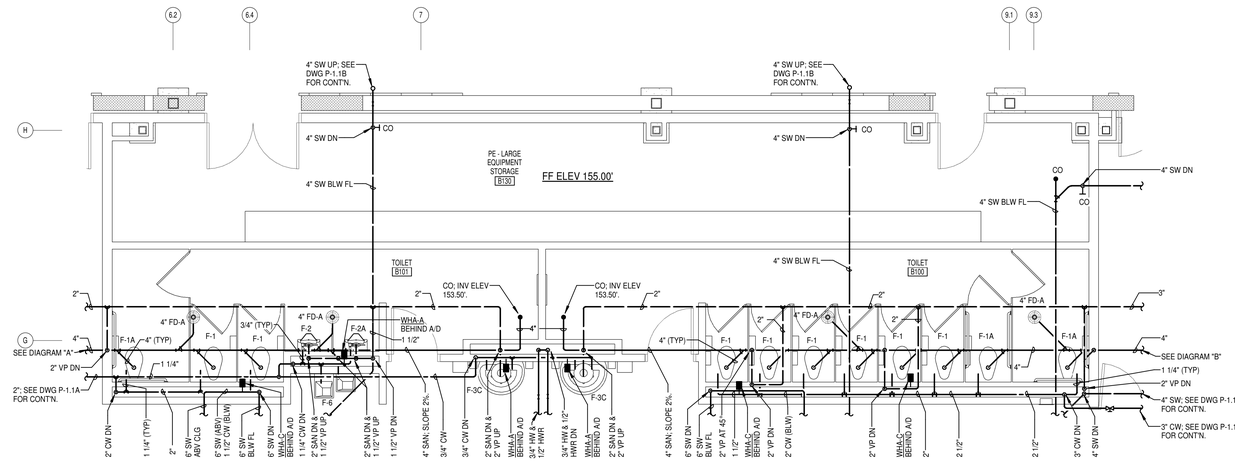

2 P-4.1 PART PLAN - TOILET ROOMS B101 AND B100
SCALE: 1/4" = 1'-0"

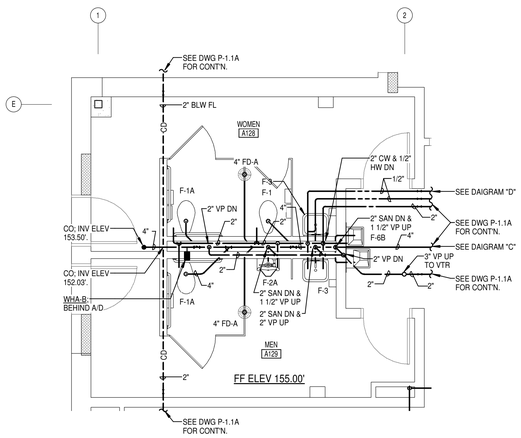

3 P-4.1 PART PLAN - LAVATORIES A128 AND A129
SCALE: 1/4" = 1'-0"

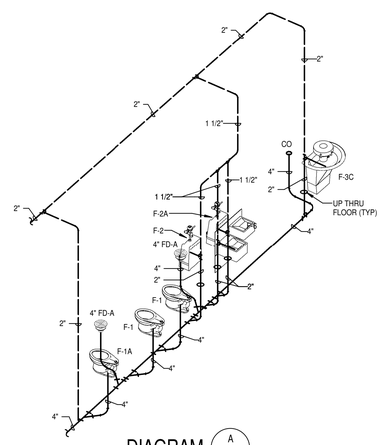

DIAGRAM A P-4.1
SANITARY AND VENT RISER DIAGRAM
TOILET B101
NOT TO SCALE

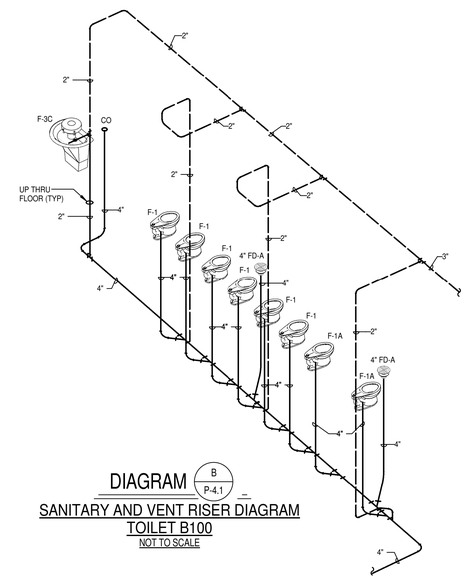

DIAGRAM B P-4.1
SANITARY AND VENT RISER DIAGRAM
TOILET B100
NOT TO SCALE

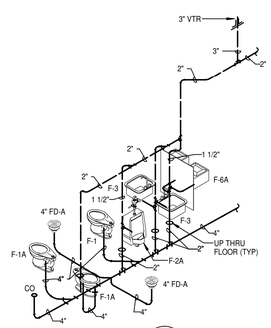

DIAGRAM C P-4.1
SANITARY AND VENT RISER DIAGRAM
LAVATORIES A128 AND A129
NOT TO SCALE

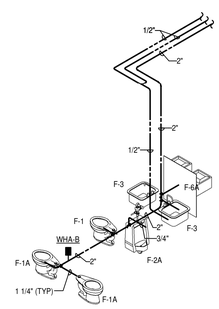

DIAGRAM D P-4.1
DOMESTIC WATER RISER DIAGRAM
LAVATORIES A128 AND A129
NOT TO SCALE

GENERAL NOTES:

A. INFORMATION SHOWN ON THIS DRAWING PERTAINING TO EXISTING CONDITIONS HAS BEEN OBTAINED FROM AVAILABLE BUILDING DRAWINGS OR GENERAL FIELD OBSERVATIONS AND MAY NOT INDICATE EXISTING CONDITIONS IN DETAIL OR DIMENSION. DETERMINE EXISTING CONDITIONS PRIOR TO FABRICATION OR PERFORMANCE OF ANY WORK. SHOULD CONDITIONS BE DISCOVERED THAT PREVENT EXECUTION OF THE WORK AS INDICATED, IMMEDIATELY NOTIFY THE ARCHITECT IN WRITING AND AWAIT DIRECTION BEFORE PROCEEDING WITH THE WORK.

B. DO NOT LOCATE DUCTWORK OR PIPING ABOVE ELECTRICAL PANELS OR EQUIPMENT.

C. PIPING SHALL BE INSTALLED BETWEEN AND/OR BELOW JOISTS/BEAMS IN NO CASE SHALL PIPING PENETRATE STRUCTURAL JOISTS OR BEAMS. UNLESS OTHERWISE NOTED.

D. FINISHED FLOOR ELEVATIONS SHOWN ON FLOOR PLANS SHALL BE CONFIRMED WITH ELEVATIONS SHOWN ON ARCHITECTURAL AND STRUCTURAL DRAWINGS PRIOR TO INSTALLATION OF PLUMBING SYSTEMS.

E. SEE DRAWING P-0.1 FOR PLUMBING LEGEND, SYMBOLS AND ABBREVIATIONS.

F. SANITARY PIPING BELOW FLOOR SLAB SHALL BE SLOPED AT 2% AND/OR TO INVERT ELEVATIONS SHOWN.

G. STORM WATER PIPING BELOW FLOOR SLAB SHALL BE SLOPED AT 2% AND/OR TO INVERT ELEVATIONS SHOWN.

H. CONDENSATE PIPING BELOW FLOOR SLAB SHALL BE SLOPED AT 1% AND/OR TO INVERT ELEVATIONS SHOWN.

I. SANITARY PIPING ABOVE FLOOR SLAB SHALL BE SLOPED BASED ON SIZE. PIPING 2.5 INCHES AND SMALLER SHALL BE SLOPED AT 2% AND PIPING 3 INCHES AND LARGER SHALL BE SLOPED AT 1%.

J. STORM WATER PIPING ABOVE FLOOR SLAB SHALL BE SLOPED AT 1%, UNLESS NOTED OTHERWISE.

K. CONDENSATE PIPING ABOVE FLOOR SLAB SHALL BE SLOPED AT 1%, UNLESS NOTED OTHERWISE.

L. SANITARY AND STORM WATER PIPING BELOW SLAB ON GRADE SHALL BE PVC SCH 40 DWV PIPING AND FITTINGS (BASE BID); CAST IRON HUB/SPIGOT PIPE AND GASKETED FITTINGS (ADD ALTERNATE NO 8).

M. PVC PIPING INSTALLED BELOW FLOOR SLAB SHALL BE INSTALLED WITH GREAT CARE AND EXCELLENT CRAFTSMANSHIP. PIPING SHALL BE INSTALLED UPON A PROPERLY PREPARED BED CONFORMING TO THE REQUIREMENTS OF ASTM D2321 "UNDERGROUND INSTALLATION OF FLEXIBLE THERMOPLASTIC SEWER PIPE".

N. ALL ISOLATION AND BALANCING VALVES SHALL BE INSTALLED IN A READILY ACCESSIBLE LOCATION WITHOUT OBSTRUCTION.

© 2016 James Posey Associates, Inc.

James Posey Associates
Engineering Your Vision
Mechanical & Electrical Engineers
jamesposey.com
3112 Lord Baltimore Drive
Baltimore, MD 21244
tel 410-265-6100
fax 410-298-9820

Professional Certification. I hereby certify that these documents were prepared or approved by me, and that I am a duly Licensed Professional Engineer under the laws of the state of Maryland. License number 36666. Expiration date: 01-16-2017.

JPA PROJECT NO. 6545-15

GRIMM AND PARKER
11720 Beltsville Drive
Suite 600
Calverton, MD 20705
Tel: 301.595.1000
www.grimmandparker.com
GP #21541

PART PLANS
LANSDOWNE ELEMENTARY SCHOOL
2301 ALMA ROAD, BALTIMORE, MD

DATE	DESCRIPTION
10/7/16	ADD NO.1

P-4.1
11/17/16
BID SET

© GRIMM AND PARKER, P.C. 2014

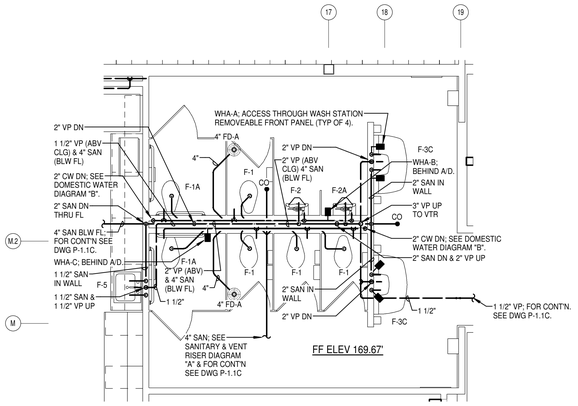

1 P-4.2 PART PLAN - TOILET ROOMS C203 AND C204

SCALE: 1/4" = 1'-0"

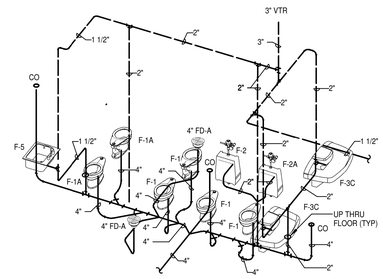

DIAGRAM A P-4.2

SANITARY AND VENT RISER DIAGRAM
TOILET C203 AND 204

NOT TO SCALE

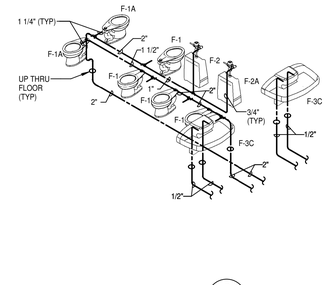

DIAGRAM B P-4.2

DOMESTIC WATER RISER DIAGRAM LAVATORIES
C203 AND C204

NOT TO SCALE

GENERAL NOTES:

A. INFORMATION SHOWN ON THIS DRAWING PERTAINING TO EXISTING CONDITIONS HAS BEEN OBTAINED FROM AVAILABLE BUILDING DRAWINGS OR GENERAL FIELD OBSERVATIONS AND MAY NOT INDICATE EXISTING CONDITIONS IN DETAIL OR DIMENSION. DETERMINE EXISTING CONDITIONS PRIOR TO FABRICATION OR PERFORMANCE OF ANY WORK. SHOULD CONDITIONS BE DISCOVERED THAT PREVENT EXECUTION OF THE WORK AS INDICATED, IMMEDIATELY NOTIFY THE ARCHITECT IN WRITING AND AWAIT DIRECTION BEFORE PROCEEDING WITH THE WORK.

B. DO NOT LOCATE DUCTWORK OR PIPING ABOVE ELECTRICAL PANELS OR EQUIPMENT.

C. PIPING SHALL BE INSTALLED BETWEEN AND/OR BELOW JOISTS/BEAMS IN NO CASE SHALL PIPING PENETRATE STRUCTURAL JOISTS OR BEAMS. UNLESS OTHERWISE NOTED.

D. FINISHED FLOOR ELEVATIONS SHOWN ON FLOOR PLANS SHALL BE CONFIRMED WITH ELEVATIONS SHOWN ON ARCHITECTURAL AND STRUCTURAL DRAWINGS PRIOR TO INSTALLATION OF PLUMBING SYSTEMS.

E. SEE DRAWING P-0.1 FOR PLUMBING LEGEND, SYMBOLS AND ABBREVIATIONS.

F. SANITARY PIPING BELOW FLOOR SLAB SHALL BE SLOPED AT 2% AND/OR TO INVERT ELEVATIONS SHOWN.

G. STORM WATER PIPING BELOW FLOOR SLAB SHALL BE SLOPED AT 2% AND/OR TO INVERT ELEVATIONS SHOWN.

H. CONDENSATE PIPING BELOW FLOOR SLAB SHALL BE SLOPED AT 1% AND/OR TO INVERT ELEVATIONS SHOWN.

I. SANITARY PIPING ABOVE FLOOR SLAB SHALL BE SLOPED BASED ON SIZE: PIPING 2.5 INCHES AND SMALLER SHALL BE SLOPED AT 2% AND PIPING 3 INCHES AND LARGER SHALL BE SLOPED AT 1%.

J. STORM WATER PIPING ABOVE FLOOR SLAB SHALL BE SLOPED AT 1%, UNLESS NOTED OTHERWISE.

K. CONDENSATE PIPING ABOVE FLOOR SLAB SHALL BE SLOPED AT 1%, UNLESS NOTED OTHERWISE.

L. SANITARY AND STORM WATER PIPING BELOW SLAB ON GRADE SHALL BE PVC SCH 40 DWV PIPING AND FITTINGS (BASE BID); CAST IRON HUB/SPIGOT PIPE AND GASKETED FITTINGS (ADD ALTERNATE NO 8).

M. PVC PIPING INSTALLED BELOW FLOOR SLAB SHALL BE INSTALLED WITH GREAT CARE AND EXCELLENT CRAFTSMANSHIP. PIPING SHALL BE INSTALLED UPON A PROPERLY PREPARED BED CONFORMING TO THE REQUIREMENTS OF ASTM D2321 "UNDERGROUND INSTALLATION OF FLEXIBLE THERMOPLASTIC SEWER PIPE".

N. ALL ISOLATION AND BALANCING VALVES SHALL BE INSTALLED IN A READILY ACCESSIBLE LOCATION WITHOUT OBSTRUCTION.

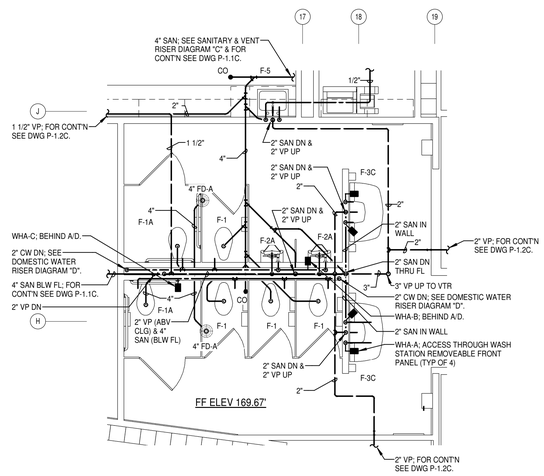

2 P-4.2 PART PLAN - TOILET ROOMS C208 AND C209

SCALE: 1/4" = 1'-0"

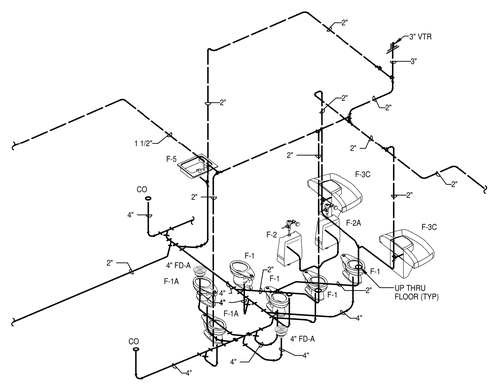

DIAGRAM C P-4.2

SANITARY AND VENT RISER DIAGRAM
TOILET C208 AND 209

NOT TO SCALE

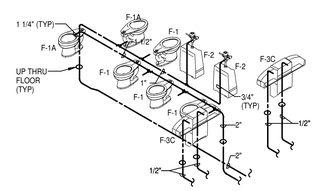

DIAGRAM D P-4.2

DOMESTIC WATER RISER DIAGRAM LAVATORIES
C208 AND C209

NOT TO SCALE

4 2 0 4 8

SCALE: 1/4" = 1'-0"

© 2016 James Posey Associates, Inc.

James Posey Associates
Engineering your vision
Mechanical & Electrical Engineers
jamesposey.com
3112 Lord Baltimore Drive
Baltimore, MD 21244
tel 410-265-6100
fax 410-298-9820

Professional Certification. I hereby certify that these documents were prepared or approved by me, and that I am a duly licensed professional engineer under the laws of the state of Maryland. License No. 33995. Expiration date: 01-16-2017.

STATE OF MARYLAND MICHAEL P. SIERREN 33995 PROFESSIONAL ENGINEER

JPA PROJECT NO. 6548-15

11720 Beltsville Drive
Suite 600
Calverton, MD 20705
Tel: 301.595.1000
www.grimmandparker.com
GRIMM AND PARKER

GP #21541

PART PLANS

LANSDOWNE ELEMENTARY SCHOOL
2301 ALMA ROAD, BALTIMORE, MD

DATE	DESCRIPTION
10/7/16	ADD NO.1

P-4.2

11/17/16
BID SET

© GRIMM AND PARKER, P.C. 2014

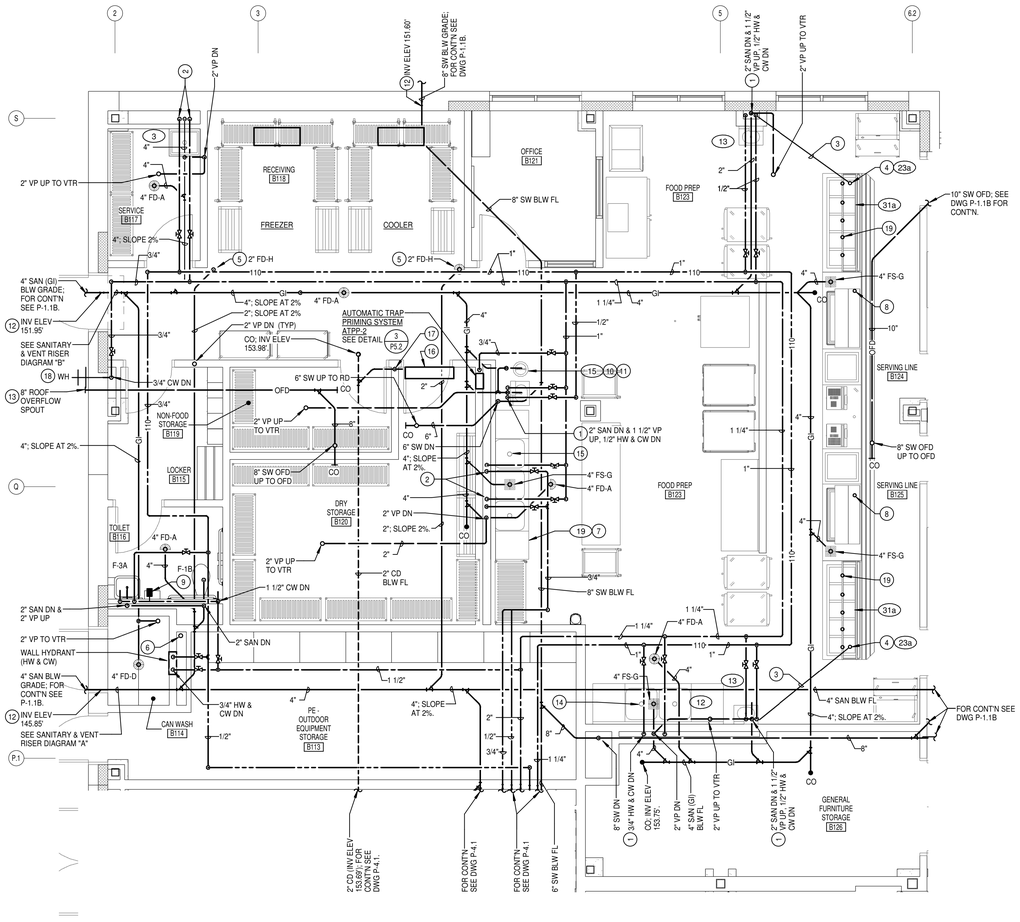

1 / P-4.3 PART PLAN - KITCHEN

SCALE: 1/4" = 1'-0"

KITCHEN EQUIPMENT ROUGH-IN SCHEDULE

DESIG. (1)	ITEM	CW	HW	WASTE	NOTES
3	MOP SINK	3/4"	3/4"	3"	
12	PREP SINK	1/2"	1/2"	-	-
13	HAND SINK	1/2"	1/2"	1 1/2"	1
15	EYE WASH STATION	1/2"	1/2"	1 1/2"	2
19	POT WASHING SINK	(2) 3/4"	(2) 3/4"	-	-
23a	FILL FAUCET	-	1/2"	-	1

NOTES:

1. DESIGNATION PER KITCHEN DRAWING EQUIPMENT SCHEDULE SHOWN ON DRAWING K-101.

NOTE:

1. ALL FLOOR DRAINS AND FLOOR SINKS LOCATED THROUGHOUT KITCHEN AREA AND ANCILLARY SPACES SHALL HAVE THEIR P-TRAPS PRIMED FROM ATPP-2.
2. DRAINAGE PIPING LOCATED ABOVE OR AT CEILING OF KITCHENS, FOOD PREPARATION AREAS, FOOD STORAGE OR CAFETERIAS SHALL BE INSTALLED PER CODE OF MARYLAND REGULATIONS, TITLE 10 DEPARTMENT OF HEALTH AND MENTAL HYGENE, SUBTITLE FOOD, 10.15.03 FOOD SERVICE FACILITIES.

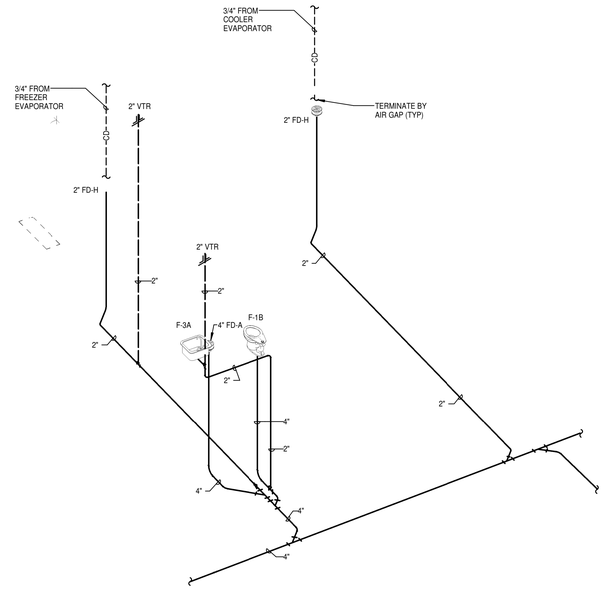

SANITARY AND VENT RISER DIAGRAM "A"

NOT TO SCALE

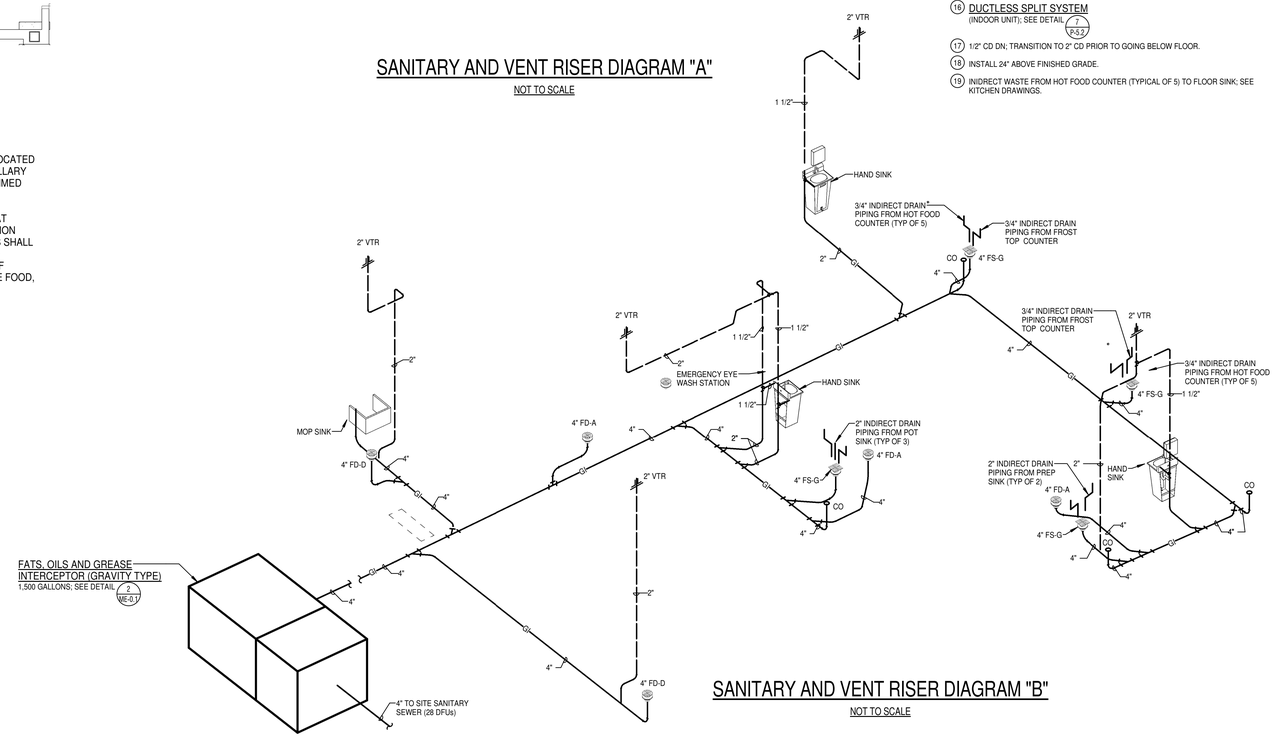

SANITARY AND VENT RISER DIAGRAM "B"

NOT TO SCALE

SCALE: 1/4" = 1'-0"

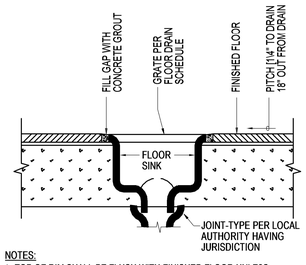

NOTES:

1. TOP OF RIM SHALL BE FLUSH WITH FINISHED FLOOR UNLESS DIRECTED OTHERWISE BY AUTHORITY HAVING JURISDICTION.

DETAIL D/P-4.3 FLOOR SINK INSTALLATION

NOT TO SCALE

GENERAL NOTES:

A. INFORMATION SHOWN ON THIS DRAWING PERTAINING TO EXISTING CONDITIONS HAS BEEN OBTAINED FROM AVAILABLE BUILDING DRAWINGS OR GENERAL FIELD OBSERVATIONS AND MAY NOT INDICATE EXISTING CONDITIONS IN DETAIL OR DIMENSION. DETERMINE EXISTING CONDITIONS PRIOR TO FABRICATION OR PERFORMANCE OF ANY WORK. SHOULD CONDITIONS BE DISCOVERED THAT PREVENT EXECUTION OF THE WORK AS INDICATED, IMMEDIATELY NOTIFY THE ARCHITECT IN WRITING AND AWAIT DIRECTION BEFORE PROCEEDING WITH THE WORK.

B. DO NOT LOCATE DUCTWORK OR PIPING ABOVE ELECTRICAL PANELS OR EQUIPMENT.

C. PIPING SHALL BE INSTALLED BETWEEN AND/OR BELOW JOISTS/BEAMS, IN NO CASE SHALL PIPING PENETRATE STRUCTURAL JOISTS OR BEAMS, UNLESS OTHERWISE NOTED.

D. FINISHED FLOOR ELEVATIONS SHOWN ON FLOOR PLANS SHALL BE CONFIRMED WITH ELEVATIONS SHOWN ON ARCHITECTURAL AND STRUCTURAL DRAWINGS PRIOR TO INSTALLATION OF PLUMBING SYSTEMS.

E. SEE KITCHEN DRAWINGS FOR ADDITIONAL INFORMATION.

F. SEE DRAWING P6.1 FOR PLUMBING SYMBOLS AND ABBREVIATIONS.

G. ALL INDIRECT WASTE PIPING FROM KITCHEN EQUIPMENT IS SHOWN ON KITCHEN DRAWINGS.

H. REFER TO KITCHEN DRAWINGS EXACT FLOOR SINK/DRAIN LOCATION.

I. ALL INDIRECT WASTE PIPING SHALL BE TERMINATED TO FLOOR DRAIN OR FLOOR SINK PER CODE.

J. SANITARY PIPING BELOW FLOOR SLAB SHALL BE SLOPED AT 2% AND/OR TO INVERT ELEVATIONS SHOWN.

K. STORM WATER PIPING BELOW FLOOR SLAB SHALL BE SLOPED AT 2% AND /OR TO INVERT ELEVATIONS SHOWN.

L. SANITARY PIPING ABOVE FLOOR SLAB SHALL BE SLOPED BASED ON SIZE, PIPING 2.5 INCHES AND SMALLER SHALL BE SLOPED AT 2% AND PIPING 3 INCHES AND LARGER SHALL BE SLOPED AT 1%.

M. STORM WATER PIPING ABOVE FLOOR SLAB SHALL BE SLOPED AT 1% UNLESS NOTED OTHERWISE.

N. SANITARY AND STORM WATER PIPING BELOW SLAB ON GRADE SHALL BE PVC SCH 40 DWV PIPING AND FITTINGS (BASE BID); CAST IRON HUB/SPIGOT PIPE AND GASKETED FITTINGS (ALTERNATE).

O. PVC PIPING INSTALLED BELOW FLOOR SLAB SHALL BE INSTALLED WITH GREAT CARE AND EXCELLENT CRAFTSMANSHIP. PIPING SHALL BE INSTALLED UPON A PROPERLY PREPARED BED CONFORMING TO THE REQUIREMENTS OF ASTM D2321 "UNDERGROUND INSTALLATION OF FLEXIBLE THERMOPLASTIC SEWER PIPE".

P. ALL ISOLATION AND BALANCING VALVES SHALL BE INSTALLED IN A READILY ACCESSIBLE LOCATION WITHOUT OBSTRUCTION.

SPECIFIC NOTES:

1. ROUGH-IN SANITARY, VENT, HOT AND COLD PER REQUIREMENTS IN PLUMBING SCHEDULE ON DWG K103.
2. 3/4" HW AND 3/4" CW (TYPICAL OF 2) DN; SEE PLUMBING SCHEDULE ON DWG K103 FOR ROUGH-IN HEIGHT.
3. 1/2" HW BELOW FLOOR INSIDE 4" STEEL PIPE.
4. 1/2" HW UP THROUGH FL INSIDE SLEEVE; TERMINATE WITH SHUTOFF VALVE AT 32" AFF FOR CONNECTION OF FILL FAUCET.
5. INSTALL FLOOR DRAIN UP AGAINST WALL OF FREEZER; COORDINATE FLOOR DRAIN LOCATION WITH ACTUAL FREEZER WALL LOCATION PRIOR TO POURING SLAB ON GRADE.
6. 4" RADON VENT UP AND DN; SEE DETAIL 3/P5.2
7. INDIRECT WASTE PIPING FROM EACH COMPARTMENT; TERMINATE WITH AIR GAP TO FLOOR SINK CONNECTED TO SANITARY GREASE INTERCEPTOR.
8. INDIRECT WASTE FROM FROST TOP COUNTER TO FLOOR SINK; SEE KITCHEN DRAWINGS.
9. WHA-A; INSTALL BEHIND ACCESS DOOR.
10. BRANCH SHUT-OFF VALVES SERVING EYE WASH STATION SHALL BE LABELED AND LOCKED IN THE OPEN POSITION.
11. EMERGENCY THERMOSTATIC MIXING VALVE FOR EYE WASH STATION; SEE KITCHEN DRAWINGS.
12. PIPING PASSING THROUGH BUILDING PERIMETER FOOTING INSIDE PIPE SLEEVE MINIMUM 2 PIPE DIAMETERS LARGER THAN SERVICE PIPE.
13. PIPING TERMINATES AT ELEV 13'-0" (BOP) AF.
14. INDIRECT WASTE TO FLOOR SINK (TYPICAL OF 2); SEE KITCHEN DRAWINGS.
15. INDIRECT WASTE TO FLOOR SINK (TYPICAL OF 3); SEE KITCHEN DRAWINGS.
16. DUCTLESS SPLIT SYSTEM (INDOOR UNIT); SEE DETAIL 7/P-5.2
17. 1/2" CD DN; TRANSITION TO 2" CD PRIOR TO GOING BELOW FLOOR.
18. INSTALL 24" ABOVE FINISHED GRADE.
19. INDIRECT WASTE FROM HOT FOOD COUNTER (TYPICAL OF 5) TO FLOOR SINK; SEE KITCHEN DRAWINGS.

James Posey Associates
Engineering your vision
Mechanical & Electrical Engineers
jamesposey.com
3112 Lord Baltimore Drive
Baltimore, MD 21244
tel 410-265-6100
fax 410-298-9820

Professional Certification. I hereby certify that these documents were prepared or approved by me, and that I am a duly licensed professional engineer under the laws of the state of Maryland. License No. 36866, Expiration date: 01-16-2017.

JPA PROJECT NO. 6546-15

GRIMM AND PARKER
11720 Baltsville Drive
Suite 600
Calverton, MD 20705
Tel: 301.595.1000
www.grimmandparker.com

GP #21541

PART PLANS

LANSDOWNE ELEMENTARY SCHOOL
2301 ALMA ROAD, BALTIMORE, MD

DATE	DESCRIPTION
10/7/16	ADD NO.1

P-4.3

11/17/16
BID SET

© 2016 James Posey Associates, Inc.

© GRIMM AND PARKER, P.C. 2014

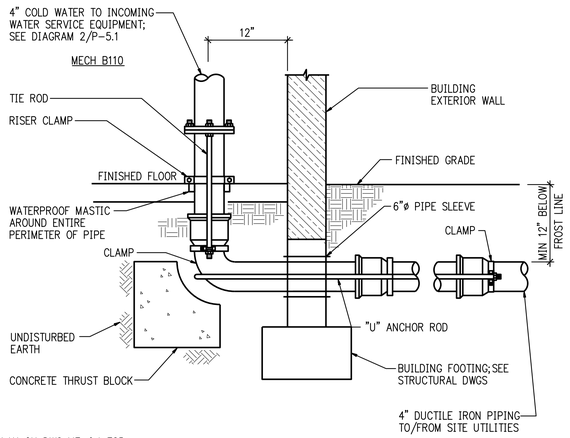

NOTES

1. SEE SITE PLAN ON DWG ME-0.1 FOR INVERT ELEVATION OF PIPING CONNECTION TO UTILITY.

DETAIL 1/P-5.1

INCOMING DOMESTIC WATER SERVICE ENTRANCE

NOT TO SCALE

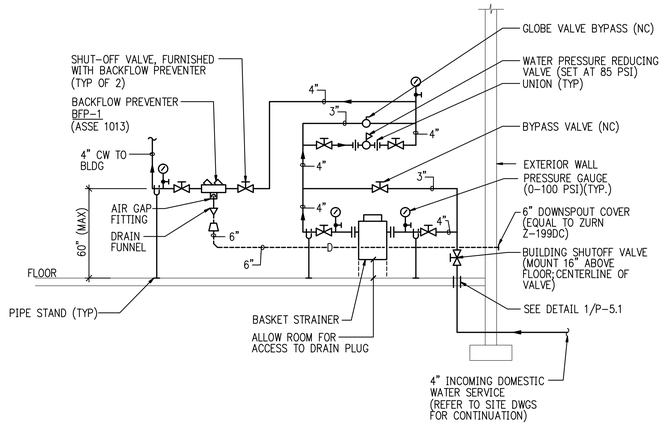

DIAGRAM 2/P-5.1

DOMESTIC WATER SERVICE ENTRANCE EQUIPMENT

NOT TO SCALE

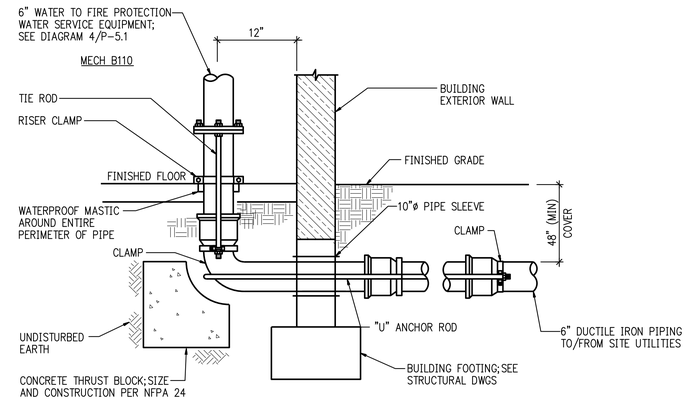

NOTES

1. SEE SITE PLAN ON DWG ME-0.1 FOR INVERT ELEVATION OF PIPING CONNECTION TO UTILITY.

DETAIL 3/P-5.1

INCOMING WATER SERVICE ENTRANCE FOR FIRE PROTECTION

NOT TO SCALE

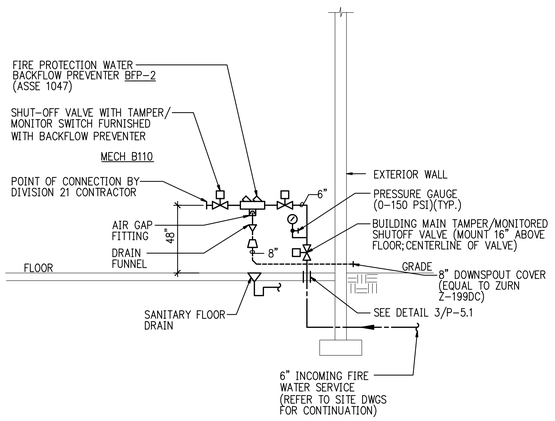

DIAGRAM 4/P-5.1

FIRE WATER SERVICE EQUIPMENT

NOT TO SCALE

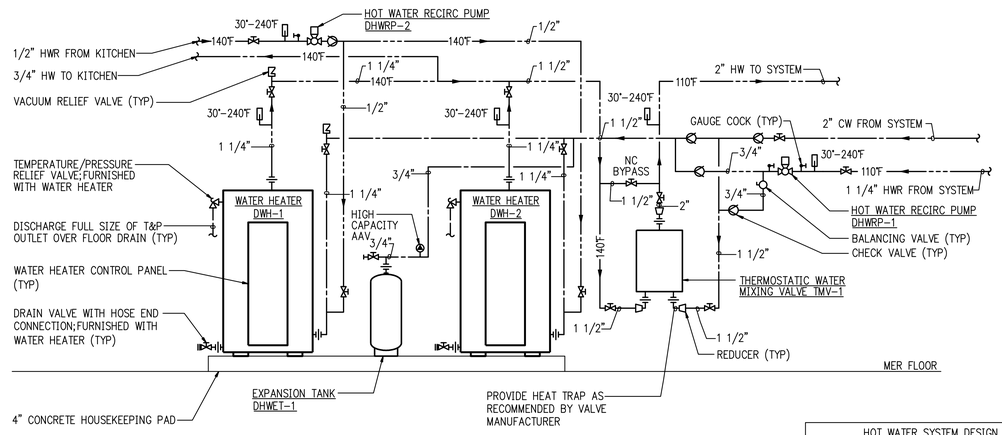

NOTES

1. THE THERMOSTATIC WATER MIXING VALVE SHALL BE INSTALLED PER THE VALVE MANUFACTURER'S RECOMMENDED PIPING DIAGRAM FOR CONTINUOUS RECIRCULATION DURING OCCUPIED HOURS.
2. CONNECT WATER HEATER TO BUILDING AUTOMATION SYSTEM TO MONITOR WATER TEMPERATURE, RESET WATER TEMPERATURE, LEAK DETECTION AND RECEIVE ALARMS .
3. DOMESTIC HOT WATER RECIRCULATION PUMPS SHALL OPERATE ON THE BUILDING OCCUPIED/UNOCCUPIED CYCLE.

DIAGRAM 5/P-5.1

DOMESTIC HOT WATER SYSTEM

NOT TO SCALE

HOT WATER SYSTEM DESIGN TEMPERATURE SCHEDULE	
EQUIPMENT	TEMPERATURE
WATER HEATER SET POINT	140°F
MASTER MIXING VALVE SET POINT (ASSE 1017)	110°F
CHILD HANDWASHING MIXING VALVE SET POINT (ASSE 1070)	95°F
HANDWASHING MIXING VALVE SET POINT (ASSE 1070)	100°F

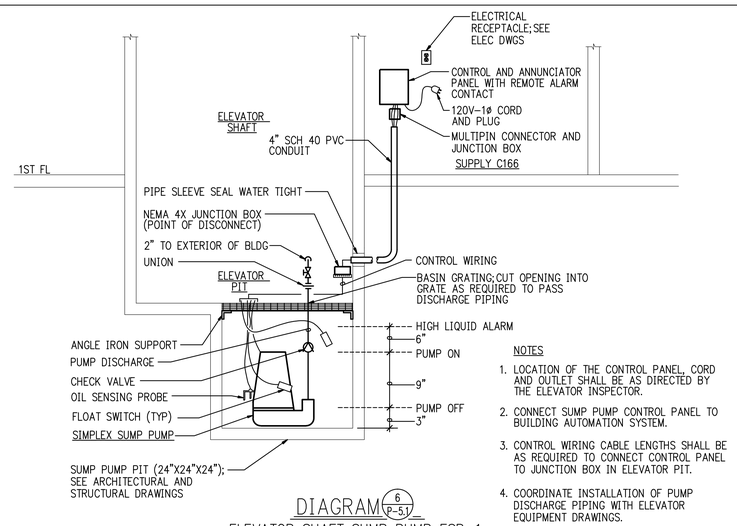

NOTES

1. LOCATION OF THE CONTROL PANEL, CORD AND OUTLET SHALL BE AS DIRECTED BY THE ELEVATOR INSPECTOR.
2. CONNECT SUMP PUMP CONTROL PANEL TO BUILDING AUTOMATION SYSTEM.
3. CONTROL WIRING CABLE LENGTHS SHALL BE AS REQUIRED TO CONNECT CONTROL PANEL TO JUNCTION BOX IN ELEVATOR PIT.
4. COORDINATE INSTALLATION OF PUMP DISCHARGE PIPING WITH ELEVATOR EQUIPMENT DRAWINGS.

DIAGRAM 6/P-5.1

ELEVATOR SHAFT SUMP PUMP ESP-1

NOT TO SCALE

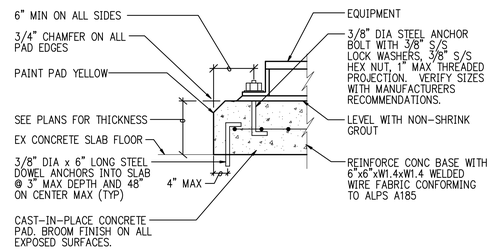

DETAIL 7/P-5.1

TYPICAL CONCRETE HOUSEKEEPING PAD

NOT TO SCALE

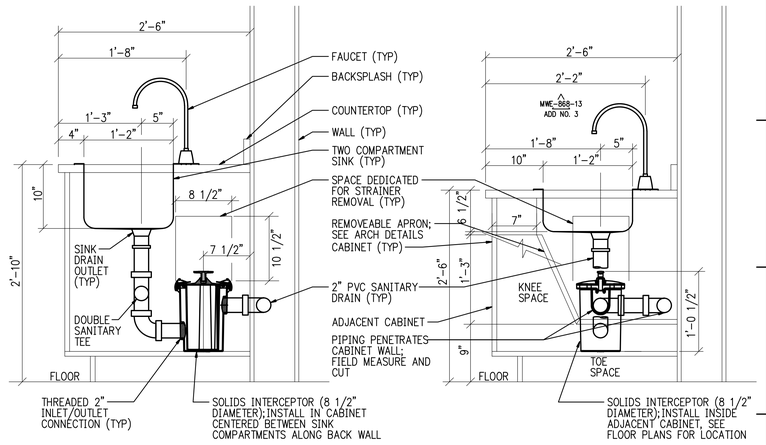

NOTES

1. PROVIDE ALL ADDITIONAL DRAINAGE PIING AND FITTINGS AS REQUIRED TO COMPLETE INSTALLATION FOR SOLIDS INTERCEPTOR.

DETAIL 8/P-5.1

SOLIDS INTERCEPTOR INSTALLATION NON-ADA SINK AND ADA SINK

NOT TO SCALE

James Posey Associates
Engineering Your Vision
Mechanical & Electrical Engineers
jamesposey.com
3112 Lord Baltimore Drive
Baltimore, MD 21244
tel 410-265-6100
fax 410-298-9820

Professional Certification. I hereby certify that these documents were prepared or approved by me, and that I am a duly licensed professional engineer under the laws of the state of Maryland, License No. 32585, Expiration date: 01-16-2017.

JPA PROJECT NO. 6540-15

GRIMM AND PARKER
11720 Beltsville Drive
Suite 600
Calverton, MD 20705
Tel: 301.595.1000
www.grimmandparker.com
GP #21541

DETAILS AND DIAGRAMS

LANSDOWNE ELEMENTARY SCHOOL
2301 ALMA ROAD, BALTIMORE, MD

DATE	DESCRIPTION

P-5.1

11/17/16
BID SET

November 10, 2016 9:27 pm
J:\Projects\6540-15 LANSDOWNE ELEMENTARY\Dwgs\6540-15-P-5.1.dwg
Plotted by: Mike Alazar

© 2016 James Posey Associates, Inc.

© GRIMM AND PARKER, P.C. 2014

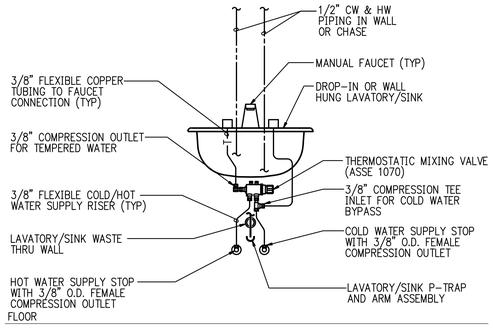

NOTES

1. INDIVIDUAL THERMOSTATIC MIXING VALVES SHALL BE INSTALLED ON SINKS AND LAVATORIES AS IDENTIFIED IN PLUMBING FIXTURE SCHEDULE.
2. PROVIDE ALL ADDITIONAL FITTINGS AS NECESSARY TO CONNECT SUPPLY TUBING FROM THERMOSTATIC MIXING VALVE TO TEMPERED/COLD SUPPLY INLETS ON FAUCET.
3. LAVATORY INSULATION ON P-TRAP AND SUPPLIES NOT SHOWN.
4. ALL VALVES, THERMOSTATIC MIXING VALVE AND PIPING SHALL BE INSTALLED NEATLY.
5. MIXING VALVE SHALL BE ACCESSIBLE FOR ADJUSTMENT.
6. CAP COLD WATER BYPASS OUTLET WHERE TMV SERVES A TEMPERED WATER FAUCET ONLY.
7. INSTALL ALL VALVES, PIPING, AND THERMOSTATIC MIXING VALVE AT ELEVATIONS AND SET BACK REQUIREMENTS AS REQUIRED TO COMPLY WITH ADA.
8. SET TEMPERED WATER DISCHARGE TEMPERATURE PER PLUMBING FIXTURE SCHEDULE AND LOCK VALVE.
9. ALL HOT/COLD SUPPLIES DO NOT FALL DIRECTLY BEHIND THE SINK/LAVATORY, WHERE SUPPLIES ARE INSTALLED ON SIDE CHASE THERMOSTATIC MIXING VALVE SHALL BE INSTALLED ON FACE OF CHASE.

DIAGRAM 1/P-5.2

UNDERCOUNTER THERMOSTATIC MIXING VALVE INSTALLATION

NOT TO SCALE

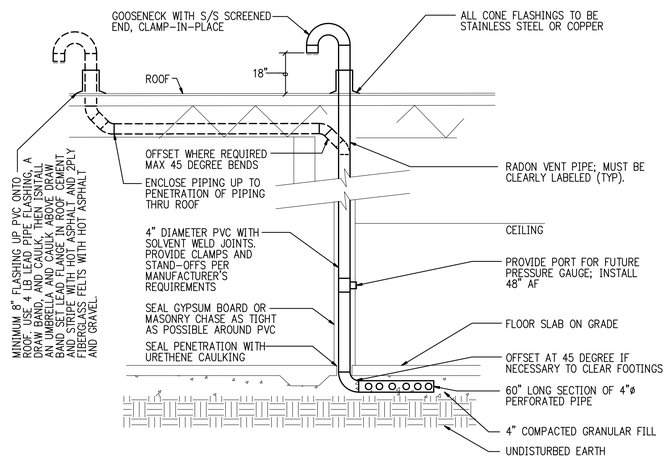

DETAIL 2/P-5.2

RADON VENT INSTALLATION

NOT TO SCALE

NOTES

1. TRAP SEAL DEPTH SHALL EQUAL TOTAL STATIC PRESSURE OF UNIT FAN + 1/2".
2. TERMINATE CONDENSATE DRAIN FROM HEAT PUMP UNIT DIRECTLY OVER OPEN SITE DRAIN; SECURE PIPING AS REQUIRED TO PREVENT MOVEMENT.
3. SINGLE CONDENSATE PIPE SHOWN, MULTIPLE CONDENSATE DRAINS MAY BE CONNECTED TOGETHER INTO CONDENSATE PRIOR TO TERMINATING INTO OPEN SITE DRAIN; SEE FLOOR PLANS.
4. PROVIDE HEIGHT ABOVE BACKWATER VALVE PER MANUFACTURERS REQUIREMENTS TO OPEN THE VALVE.

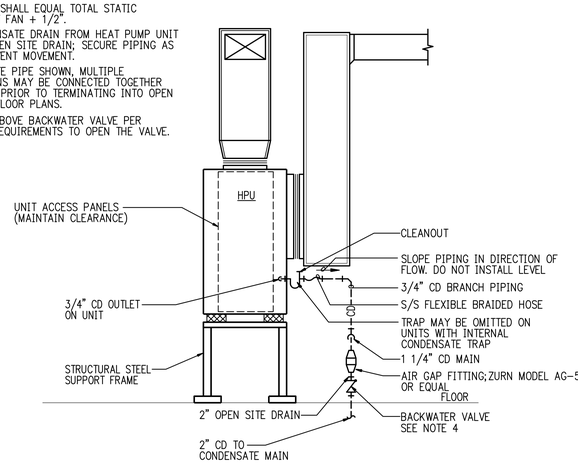

DETAIL 3/P-5.2

TYPICAL CONDENSATE PIPING CONNECTION TO TO VERTICAL HEAT PUMP UNITS

NOT TO SCALE

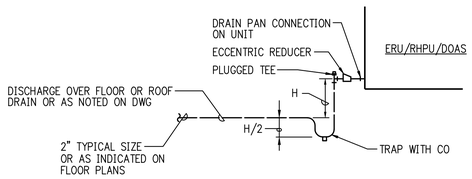

NOTES:

1. H=TOTAL SP OF UNIT FAN + 1/2" (SEE ERU & RHPU UNIT SCHEDULE ON MECHANICAL DWGS)

DETAIL 4/P-5.2

TYPICAL CONDENSATE PIPE CONNECTION TO DRAW THRU AC UNITS

NOT TO SCALE

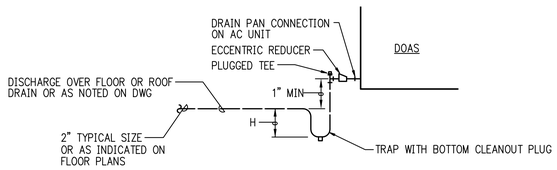

NOTES:

1. H=TOTAL SP OF UNIT FAN + 2" (SEE UNIT ERU & DOAS SCHEDULE ON MECHANICAL DWGS)

DETAIL 5/P-5.2

TYPICAL CONDENSATE PIPE CONNECTION TO BLOW THRU AC UNITS

NOT TO SCALE

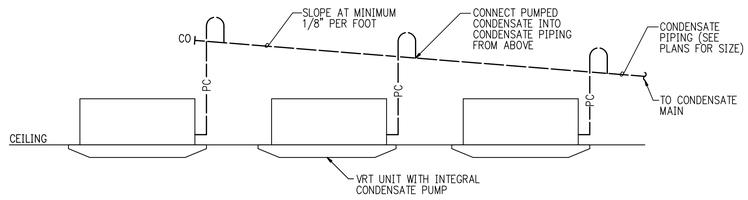

NOTES:

1. INSTALL CONDENSATE PIPING FROM VARIABLE REFRIGERANT TERMINAL UNITS ACCORDING TO MANUFACTURER'S INSTRUCTIONS.
2. TOTAL HEIGHT FROM CONDENSATE PIPE DISCHARGE CONNECTION TO TOP OF PIPE DROP INTO MAIN SHALL NOT EXCEED MANUFACTURERS DATA FOR FURNISHED CONDENSATE PUMP.

DIAGRAM 6/P-5.2

MULTIPLE VRT CONDENSATE PIPING

NOT TO SCALE

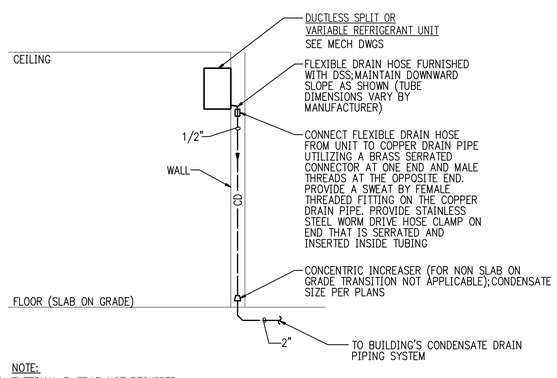

NOTE:

1. EXTERNAL P-TRAP NOT REQUIRED

DETAIL 7/P-5.2

TYPICAL CONDENSATE PIPE CONNECTION TO WALL MOUNTED DUCTLESS SPLIT UNIT

NOT TO SCALE

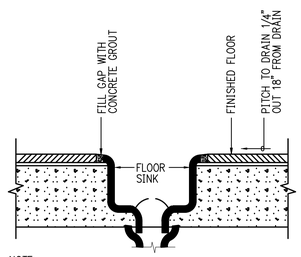

NOTE:

1. TOP OF RIM SHALL BE FLUSH WITH FINISHED FLOOR UNLESS DIRECTED OTHERWISE BY AUTHORITY HAVING JURISDICTION.

DETAIL 8/P-5.2

FLOOR SINK MOUNTING

NOT TO SCALE

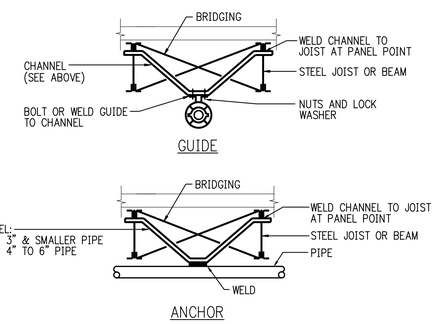

NOTES:

1. INSTALL PIPE ANCHORS AND GUIDES WHERE SHOWN ON DRAWINGS.

DETAIL 9/P-5.2

PIPE ANCHOR AND GUIDE FROM BAR JOIST/BEAM

NOT TO SCALE

James Posey Associates
Engineering Your Vision
Mechanical & Electrical Engineers
jamesposey.com
3112 Lord Baltimore Drive
Baltimore, MD 21244
tel 410-265-6100
fax 410-298-9820

Professional Certification. I hereby certify that these documents were prepared or approved by me, and that I am a duly licensed professional engineer under the laws of the state of Maryland, License No. 32585, Expiration date: 01-16-2017.

JPA PROJECT NO. 6540-15

GRIMM AND PARKER
11720 Beltsville Drive
Suite 600
Calverton, MD 20705
Tel: 301.595.1000
www.grimmandparker.com

GP #21541

DETAILS AND DIAGRAMS

LANSDOWNE ELEMENTARY SCHOOL
2301 ALMA ROAD, BALTIMORE, MD

DATE	DESCRIPTION

P-5.2

11/17/16
BID SET

November 10, 2016 9:27 am
P:\Projects\6540-15 Lansdowne ES\Revit\6540-15 Lansdowne ES_R2016.rvt

© 2016 James Posey Associates, Inc.

© GRIMM AND PARKER, P.C. 2014

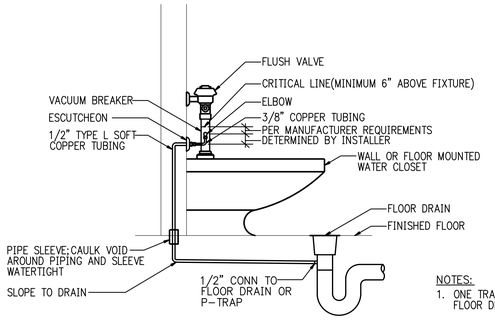

NOTES:
1. ONE TRAP PRIMER ASSEMBLY FOR EACH FLOOR DRAIN.
2. TRAP PRIMER ASSEMBLY SHALL BE INSTALLED ON NON-ADA WATER CLOSETS ONLY.

DETAIL 1/P-5.3
FLOOR DRAIN TRAP PRIMER
FROM WATER CLOSET FLUSH VALVE
NOT TO SCALE

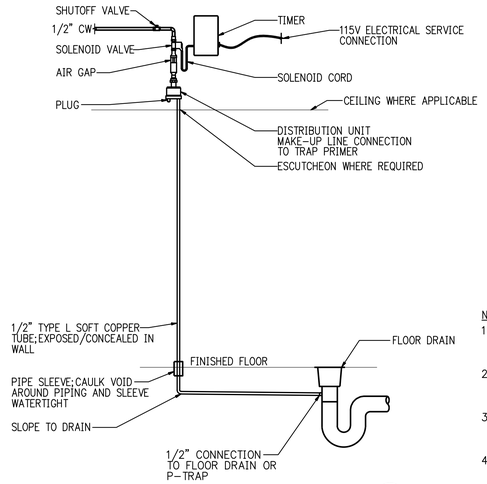

NOTES:
1. TRAP PRIMER INSTALLED ABOVE CEILING, UNLESS INSTALLED IN ROOM WITHOUT A CEILING.
2. DISTRIBUTION UNIT SHALL BE INSTALLED LEVEL TO ALLOW EQUAL DISTRIBUTION OF WATER FROM MANIFOLD TO DRAINS.
3. TRAP PRIMING PIPING NOT SHOWN ON FLOOR PLANS, PIPING SHALL BE INSTALLED IN SHORTEST POSSIBLE ROUTE.
4. SEE FLOOR PLANS AND AUTOMATIC TRAP PRIMING SCHEDULE ON DRAWING P-6.1 FOR LOCATIONS.

DETAIL 2/P-5.3
AUTOMATIC INLINE TRAP PRIMER ASSEMBLY FROM
DOMESTIC COLD WATER PIPE
NOT TO SCALE

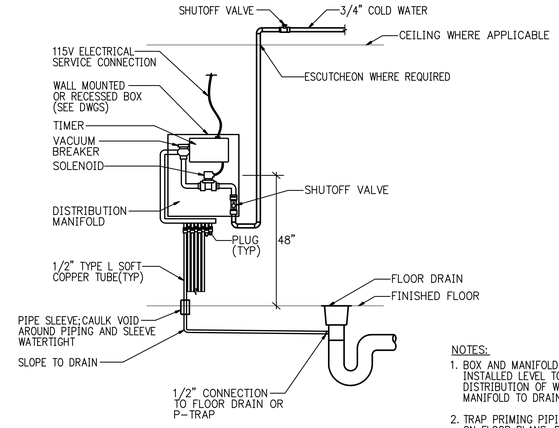

NOTES:
1. BOX AND MANIFOLD SHALL BE INSTALLED LEVEL TO ALLOW EQUAL DISTRIBUTION OF WATER FROM MANIFOLD TO DRAINS.
2. TRAP PRIMING PIPING NOT SHOWN ON FLOOR PLANS, PIPING SHALL BE INSTALLED IN SHORTEST POSSIBLE ROUTE.
3. SEE FLOOR PLANS AND AUTOMATIC TRAP PRIMING SCHEDULE ON DRAWING P-6.1 FOR LOCATIONS.

DETAIL 3/P-5.3
AUTOMATIC TRAP PRIMER
PANEL ASSEMBLY
NOT TO SCALE

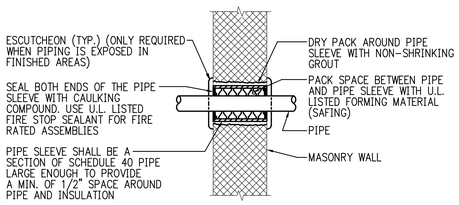

NOTES:
1. THIS DETAIL APPLIES TO BOTH INSULATED AND NON-INSULATED PIPE.
2. THIS DETAIL IS THE MINIMUM REQUIREMENT. INSTALLATION MUST BE IN ACCORDANCE WITH INSTRUCTIONS BY MANUFACTURER OF FIRE STOP SEALANT.
3. PIPE SLEEVE MATERIAL PER SPECIFICATIONS.
4. PROVIDE MECHANICAL PENETRATION SEALS WHERE PIPE PENETRATES BELOW GRADE INTO A FINISHED SPACE.

DETAIL 4/P-5.3
PIPE THROUGH INTERIOR MASONRY WALL
NOT TO SCALE

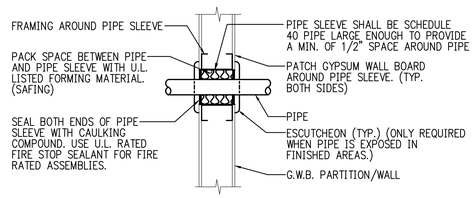

NOTES:
1. THIS DETAIL APPLIES TO BOTH INSULATED AND NON-INSULATED PIPE.
2. THIS DETAIL IS THE MINIMUM REQUIREMENT. INSTALLATION MUST BE IN ACCORDANCE WITH INSTRUCTIONS BY MANUFACTURER OF FIRE STOP SEALANT.
3. PIPE SLEEVE MATERIAL PER SPECIFICATIONS.

DETAIL 5/P-5.3
PIPE THRU INTERIOR STUD
GYPSUM WALL BOARD PARTITION OR WALL
NOT TO SCALE

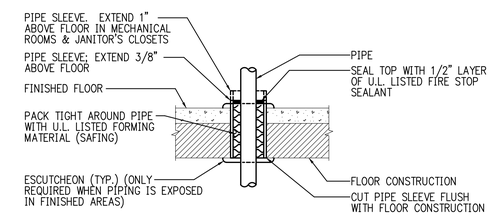

NOTES:
1. THIS DETAIL APPLIES TO BOTH INSULATED AND NON-INSULATED PIPE.
2. THIS DETAIL IS THE MINIMUM REQUIREMENT. INSTALLATION MUST BE IN ACCORDANCE WITH INSTRUCTIONS BY MANUFACTURER OF FIRE STOP SEALANT.
3. PIPE SLEEVE MATERIAL PER SPECIFICATIONS.

DETAIL 6/P-5.3
PIPE THRU FLOOR
NOT TO SCALE

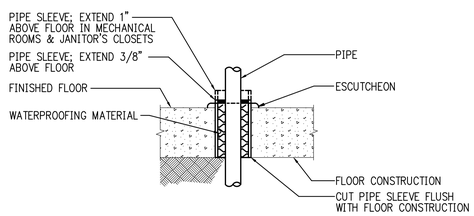

NOTES:
1. PIPE SLEEVE MATERIAL PER SPECIFICATIONS.
2. WHERE PIPING PENETRATES FLOORS IN KITCHEN OR FOOD SERVICE AREAS, EXTEND AND TERMINATE PIPE SLEEVE ABOVE FLOOR PER LOCAL AND STATE HEALTH DEPARTMENT REQUIREMENTS.
3. PROVIDE CHROME PLATED ESCUTHEON(S) WHERE EXPOSED IN KITCHEN OR FOOD SERVICE AREAS.

DETAIL 7/P-5.3
PIPE THRU SLAB ON GRADE
NOT TO SCALE

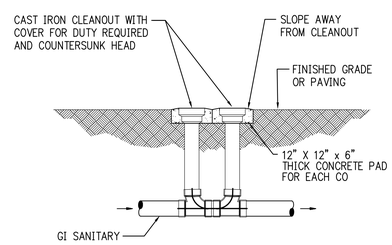

DETAIL 8/P-5.3
TYPICAL EXTERIOR CLEANOUT
NOT TO SCALE

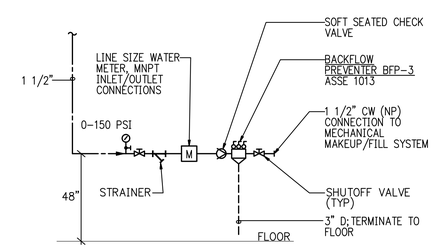

NOTES:
1. WATER METER REQUIRES NO UPSTREAM OR DOWNSTREAM STRAIGHT LINE DISTANCES TO BE MAINTAINED.
2. WATER METER SHALL INTERFACE WITH THE BUILDING AUTOMATION SYSTEM.

DETAIL 9/P-5.3
INSTALLATION BACKFLOW PREVENTER AND WATER METER
FOR MECHANICAL MAKEUP/FILL SYSTEM
NOT TO SCALE

© 2016 James Posey Associates, Inc.

November 10, 2016 9:27 am
Drawing Name: U:_SERVICE_SERVICE_PROJECTS_BALAZAR

James Posey Associates
Engineering Your Vision
Mechanical & Electrical Engineers
jamesposey.com
3112 Lord Baltimore Drive
Baltimore, MD 21244
tel 410-265-6100
fax 410-298-9820

Professional Certification. I hereby certify that these documents were prepared or approved by me, and that I am a duly licensed professional engineer under the laws of the state of Maryland, License No. 32985, Expiration date: 01-16-2017.

JPA PROJECT NO. 6540-15

GRIMM AND PARKER
11720 Beltsville Drive
Suite 600
Calverton, MD 20705
Tel: 301.595.1000
www.grimmandparker.com

GP #21541

DETAILS AND DIAGRAMS
LANSDOWNE ELEMENTARY SCHOOL
2301 ALMA ROAD, BALTIMORE, MD

DATE	DESCRIPTION

P-5.3
11/17/16
BID SET

PUMP SCHEDULE

DESIG	SERVICE	TEMP	GPM	FT HD	SIZE (IN)	HP	VOLTAGE	RPM	MANUFACTURER'S MODEL NO (TACO)	NOTES
DHWRP-1	DOMESTIC HOT WATER RECIRC	110	9.5	20	1 1/4"	1/3	115V-1PH	3450	MODEL 112	1,2
DHWRP-2	DOMESTIC HOT WATER RECIRC	140	1	7	3/4"	1/40	115V-1PH	3250	MODEL 006BC4	2

NOTES:
1. NSF/ANSI 61 AND NSF/ANSI 372 COMPLIANT.

MISCELLANEOUS EQUIPMENT SCHEDULE

ITEM	DESCRIPTION/CAPACITY	MANUFACTURERS MODEL NO.	NOTES
DOMESTIC WATER HEATER DWH-1	ELECTRIC STORAGE TYPE WATER HEATER, 119 GALLON STORAGE TANK, ASME STAMPED, 123 GPH RECOVERY AT 100° RISE, GLASSLINED TANK, 30 KW TOTAL INPUT, SIX HEATER ELEMENTS AT 5 KW EACH, EACH HEATER ELEMENT IS SEQUENCED, 36.1 FULL LOAD AMPS, 460V/3PH SINGLE POINT ELECTRICAL CONNECTION.	A.O. SMITH MODEL DVE-120	
DOMESTIC WATER HEATER DWH-2	ELECTRIC STORAGE TYPE WATER HEATER, 119 GALLON STORAGE TANK, ASME STAMPED, 123 GPH RECOVERY AT 100° RISE, GLASSLINED TANK, 30 KW TOTAL INPUT, SIX HEATER ELEMENTS AT 5 KW EACH, EACH HEATER ELEMENT IS SEQUENCED, 36.1 FULL LOAD AMPS, 460V/3PH SINGLE POINT ELECTRICAL CONNECTION.	A.O. SMITH MODEL DVE-120	
EXPANSION TANK DHWET-1 (DOMESTIC HOT WATER SYSTEM)	DIAPHRAGM TYPE TANK, 22 GALLON TANK VOLUME, 12 GALLON ACCEPTANCE VOLUME. 16 INCHES DIAMETER X 41.5 INCHES HIGH, 150 PSI, ASME CODE SECTION VIII, FDA APPROVED AND ANSI/NSF 61 & 372 COMPLIANT	TACO MODEL PAX-84-150	FACTORY PRECHARGED AT 40 PSI, MINIMUM OPERATING PRESSURE 70 PSI WITH MAXIMUM OPERATING PRESSURE 125 PSI
THERMOSTATIC WATER MIXING VALVE TMV-1	AUTOMATIC THERMOSTATIC WATER MIXING VALVE CAPABLE OF A MAXIMIUM FLOW OF 60 GPM AT MAX 10 PSI PRESSURE DROP, MINIMUM FLOW OF 0.5 GPM, MAXIMUM 125 PSI OPERATING PRESSURE, MAXIMUM OPERATING TEMPERATURE 200 DEG F WITH 120 DEG F SETPOINT FROM FACTORY.	POWERS MODEL LFSH 1434	
ELEVATOR SHAFT SUMP PUMP ESP-1	PACKAGED ELEVATOR SUMP PUMP SYSTEM WITH 1 HP, 120V, 3600 RPM, 50 GPM AT 26 FT HD. PROVIDE SHUT-OFF VALVE AND CHECK VALVE IN PUMP DISCHARGE. PROVIDE SIMPLEX CONTROL PANEL WITH POWER AND CONTROL WIRING.	OIL MINDER SYSTEM MODEL SE-100 STANCOR INC.	ON STANBY POWER

PLUMBING FIXTURE ROUGH-IN SCHEDULE

DESIG.	TYPE OF FIXTURE	MOUNTING	CHILD ADA	STUDENT ADA	ADULT ADA	FLOW RATES	OPERATION		ROUGH-IN CONNECTIONS					NOTES
							MANUAL	SENSOR	CW	HW	TW	SAN	VP	
F-1	WATER CLOSET	FLOOR				1.1 GPF/1.6 GPF	•		1 1/4"	–	–	4"	2"	1
F-1A	WATER CLOSET	FLOOR		•		1.1 GPF/1.6 GPF	•		1 1/4"	–	–	4"	2"	1
F-1B	WATER CLOSET	FLOOR			•	1.1 GPF/1.6 GPF	•		1 1/4"	–	–	4"	2"	1
F-1C	WATER CLOSET	FLOOR	•			1.28 GPF	•		1 1/4"	–	–	4"	2"	1
F-2	URINAL	WALL				0.125 GPF	•		3/4"	–	–	2"	2"	
F-2A	URINAL	WALL		•		0.125 GPF	•		3/4"	–	–	2"	2"	
F-3	LAVATORY	WALL		•		0.5 GPM	•		1/2"	1/2"	–	2"	2"	2,4
F-3A	LAVATORY	WALL			•	0.5 GPM	•		1/2"	1/2"	–	2"	2"	2,4
F-3B	LAVATORY	WALL	•			0.5 GPM	•		1/2"	1/2"	–	2"	2"	2,3
F-3C	SEMI CIRCULAR WASH FOUNTAIN (4 STATIONS)			•		0.5 GPM/STATION		•	1/2"	1/2"	–	2"	2"	2,3
F-4	MOP SINK	FLOOR				FULL FLOW	•		3/4"	3/4"	–	3"	2"	7
F-5	CLASSROOM SINK	COUNTER		•		0.5 GPM	•		1/2"	1/2"	–	1 1/2"	1 1/2"	2,3,4
F-5A	CLASSROOM SINK	COUNTER	•			0.5 GPM	•		1/2"	1/2"	–	1 1/2"	1 1/2"	2,3,4
F-5B	SINK	COUNTER			•	0.5 GPM	•		1/2"	1/2"	–	1 1/2"	1 1/2"	2
F-5C	ART ROOM TWO COMPARTMENT SINK	COUNTER				1.5 GPM	•		1/2"	1/2"	–	2"	1 1/2"	4,5
F-5D	ART ROOM TWO COMPARTMENT SINK	COUNTER		•		0.5 GPM	•		1/2"	1/2"	–	2"	1 1/2"	4,5
F-5E	TWO COMPARTMENT SINK	COUNTER			•	1.5 GPM	•		1/2"	1/2"	–	1 1/2"	1 1/2"	2
F-5F	TWO COMPARTMENT SINK	COUNTER			•	1.5 GPM	•		1/2"	1/2"	–	1 1/2"	1 1/2"	2,6
F-5G	INSTRUMENTAL CLASSROOM SINK	COUNTER				1.5 GPM	•		1/2"	1/2"	–	1 1/2"	1 1/2"	2,4
F-5H	SINK	COUNTER			•	2.2 GPM	•		1/2"	1/2"	–	1 1/2"	1 1/2"	2
F-6	BI-LEVEL WATER COOLER WITH BOTTLE FILLER	WALL		•		0.5 GPM/1.1 GPM	•		1/2"	–	–	1 1/2"	1 1/2"	
F-6A	BI-LEVEL WATER COOLER	WALL		•		0.5 GPM/1.1 GPM	•		1/2"	–	–	1 1/2"	1 1/2"	
F-6B	BI-LEVEL WATER COOLER	WALL			•	0.5 GPM/1.1 GPM	•		1/2"	–	–	1 1/2"	1 1/2"	
F-7	SHOWER	–			•	1.5 GPM	•		1/2"	1/2"	–	2" FD	1 1/2"	
F-8	ICE MAKER SUPPLY BOX	WALL				–			1/2"	–	–	–		
F-9	EMERGENCY EYE/FACE WASH	WALL				3.0 GPM	•		–	–	1/2"	2"	1 1/2"	
F-10	DISHWASHER					–			–	1/2"	–	1"	–	8

NOTES:
1. ROUGH-IN FOR WATER SERVICE TO ADA WATER CLOSETS SHALL BE ON THE SIDE OF THE STALL.
2. ALL TRAPS SHALL BE THREADED CAST BRASS WITH CLEANOUT PLUG.
3. LAVATORY AND/OR CLASSROOM SINKS SERVING PRE-K AND KINDERGARTEN SHALL BE SUPPLIED TEMPERED WATER THROUGH A THERMOSTATIC WATER MIXING VALVE (ASSE 1070); SET AT 95°F.
4. LAVATORY AND/OR CLASSROOM SINK SHALL BE SUPPLIED TEMPERED WATER THROUGH A THERMOSTATIC WATER MIXING VALVE (ASSE 1070); SET AT 100°F.
5. SINK WASTE DRAINS TO FLOOR MOUNTED SOLIDS INTERCEPTOR.
6. SINK LOCATED IN FACULTY DINING SHALL HAVE A TAILPIECE WITH DISHWASHER FITTING.
7. FAUCET HAS NO FLOW RESTRICTOR.
8. INSTALL 1-INCH FLEXIBLE DISCHARGE HOSE FROM DISHWASHER WITH ARC AND SECURED TO UNDERSIDE OF THE COUNTERTOP, CONNECT TO INLET ON SINK TAILPIECE.

AUTOMATIC TRAP PRIMING SCHEDULE

DESIG.	LOCATION	TYPE	MANIFOLD # OUTLETS	BASIS OF DESIGN/MODEL	NOTES (X)
ATPP-1	B110	PANEL	12	PRECISION PLUMBING PRODUCTS/PTS-12	1
ATPP-2	B120	PANEL	12	PRECISION PLUMBING PRODUCTS/PTS-12	1
ATPV-1	C160	INLINE	1	PRECISION PLUMBING PRODUCTS/MP-500	2
ATPV-2	C154	INLINE	1	PRECISION PLUMBING PRODUCTS/MP-500	2
ATPV-3	C106	INLINE	1	PRECISION PLUMBING PRODUCTS/MP-500	2
ATPV-4	C138	INLINE	1	PRECISION PLUMBING PRODUCTS/MP-500	2
ATPV-5	C131	INLINE	1	PRECISION PLUMBING PRODUCTS/MP-500	2
ATPV-6	C123	INLINE	1	PRECISION PLUMBING PRODUCTS/MP-500	2
ATPV-7	C251	INLINE	1	PRECISION PLUMBING PRODUCTS/MP-500	2
ATPV-8	C243	INLINE	1	PRECISION PLUMBING PRODUCTS/MP-500	2
ATPV-9	C213	INLINE	1	PRECISION PLUMBING PRODUCTS/MP-500	2
ATPV-10	C236	INLINE	1	PRECISION PLUMBING PRODUCTS/MP-500	2
ATPV-11	C206	INLINE	1	PRECISION PLUMBING PRODUCTS/MP-500	2
ATPV-12	C234	INLINE	1	PRECISION PLUMBING PRODUCTS/MP-500	2
ATPV-13	C219	INLINE	1	PRECISION PLUMBING PRODUCTS/MP-500	2
ATPV-14	C227	INLINE	1	PRECISION PLUMBING PRODUCTS/MP-500	2

NOTES:
1. ELECTRICAL SERVICE SHALL BE 120V HARD WIRED CONNECTION THROUGH LOCKABLE SWITCH MOUNTED DIRECTLY ADJACENT TO PANEL.
2. ELECTRICAL SERVICE SHALL BE 120V HARD WIRED CONNECTION THROUGH LOCKABLE SWITCH MOUNTED DIRECTLY ADJACENT TO TIMER.

ROOF DRAIN SCHEDULE

DESIG.	USE	BASIS OF DESIGN	NOTES (X)
RD-A	PRIMARY	ZURN ZA-100	1,2,3,4,5,9,10,11
RD-B	PRIMARY	ZURN ZA-125	1,3,4,5,9,10,11
RD-C	PRIMARY	ZURN ZA-110	1,2,3,5,10,11
RD-D	PRIMARY	ZURN Z-100	1,3,6,10,11
OFD-E	SECONDARY/OVERFLOW	ZURN ZA-100	1,2,3,4,5,8,10,11
OFD-F	SECONDARY/OVERFLOW	ZURN ZA-125	1,3,4,5,7,10,11
OFD-G	SECONDARY/OVERFLOW	ZURN ZA-110	1,2,3,5,10,11
OFD-H	SECONDARY/OVERFLOW	ZURN Z-100	1,2,3,6,7,10,11

NOTES:
1. PROVIDE UNDERDECK CLAMP.
2. PROVIDE ADJUSTABLE EXTENSION.
3. PROVIDE ROOF DRAIN SUMP RECEIVER.
4. PROVIDE STAINLESS STEEL MESH SCREEN OVER DOME STRAINER.
5. PROVIDE VANDAL PROOF DOME STRAINER OR SCREEN COVER.
6. PROVIDE FLAT GRATE IN LIEU OF DOME STRAINER.
7. PROVIDE 2-INCH EXTERNAL WATER DAM.
8. PROVIDE 2-INCH HIGH INTERNAL WATER DAM.
9. PROVIDE STAINLESS STEEL PERFORATED GRAVEL GUARD.
10. PROVIDE OUTLET CONNECTION SIZE AS INDICATED ON DRAWINGS.
11. PROVIDE COMPRESSION GASKET CONNECTION ON ROOF DRAINS WITH OUTLET SIZES 3 THRU 6 INCH & NO-HUB CONNECTION ON 8" AND LARGER.

FLOOR DRAIN SCHEDULE

DESIG.	TYPE	BASIS OF DESIGN	AREA SERVED	NOTES (X)
FD-A	FLOOR	ZURN ZN-415B	TOILET ROOMS	6" "B" STRAINER (1,2)
FD-B	FLOOR	ZURN ZN-415I-AR	MECHANICAL ROOM	"I" STRAINER (1,4,9,10)
FD-C	FLOOR	ZURN Z-1920	MECHANICAL ROOM	16"x16" (1,3)
FD-D	FLOOR	ZURN Z-526	CAN WASH ROOM	12" STRAINER (2,5)
FD-E	FLOOR	ZURN Z-507	WHITING ROOM	7" STRAINER (1,2,4,9)
FD-F	FLOOR	ZURN Z-513	BUILDING OUTSIDE STORAGE	9" STRAINER (1,4,5,6)
FS-G	SINK	ZURN Z-1901-2	KITCHEN	12"x12" (1,3)
FD-H	FLOOR	ZURN ZN-415-E	KITCHEN	(1,7)

NOTES:
1. PROVIDE 1/2" TRAP PRIMER CONNECTION.
2. PROVIDE VANDALPROOF SECURED TOP STRAINER.
3. PROVIDE 1/2 GRATE.
4. PROVIDE ACID RESISTING EPOXY COATED CAST IRON BODY.
5. PROVIDE SECONDARY STRAINER.
6. PROVIDE HINGED LOCKING GRATE.
7. STRAINER WITH FUNNEL.
8. PROVIDE INSIDE GASKET CONNECTION ON ALL FLOOR DRAINS INSTALLED IN SLAB ON GRADE, NO-HUB OR COMPRESSION GASKET ON FLOOR DRAINS IN SLABS ABOVE GRADE.
9. PROVIDE SEDIMENT BUCKET.
10. INSTALL RAISED FLANGE FLUSH WITH FINISHED FLOOR, UNLESS NOTED OTHERWISE ON DRAWINGS.

James Posey Associates
Engineering Your Vision
Mechanical & Electrical Engineers
jamesposey.com
tel 410-265-6100
fax 410-298-9820
3112 Lord Baltimore Drive
Baltimore, MD 21244

Professional Certification. I hereby certify that these documents were prepared or approved by me, and that I am a duly licensed professional engineer under the laws of the State of Maryland, License No. 33986, Expiration date: 01-16-2017.

JPA PROJECT NO. 6542-15

11720 Beltsville Drive
Suite 600
Calverton, MD 20705
Tel. 301.595.1000
www.grimmandparker.com
G+P
GRIMM AND PARKER

GP #21541

SCHEDULES

LANSDOWNE ELEMENTARY SCHOOL
2301 ALMA ROAD, BALTIMORE, MD

DATE	DESCRIPTION

P-6.1

11/17/16
BID SET

© GRIMM AND PARKER, P.C. 2014
© 2016 James Posey Associates, Inc.

November 10, 2016 9:27 a.m.

© GRIMM AND PARKER, P.C. 2014

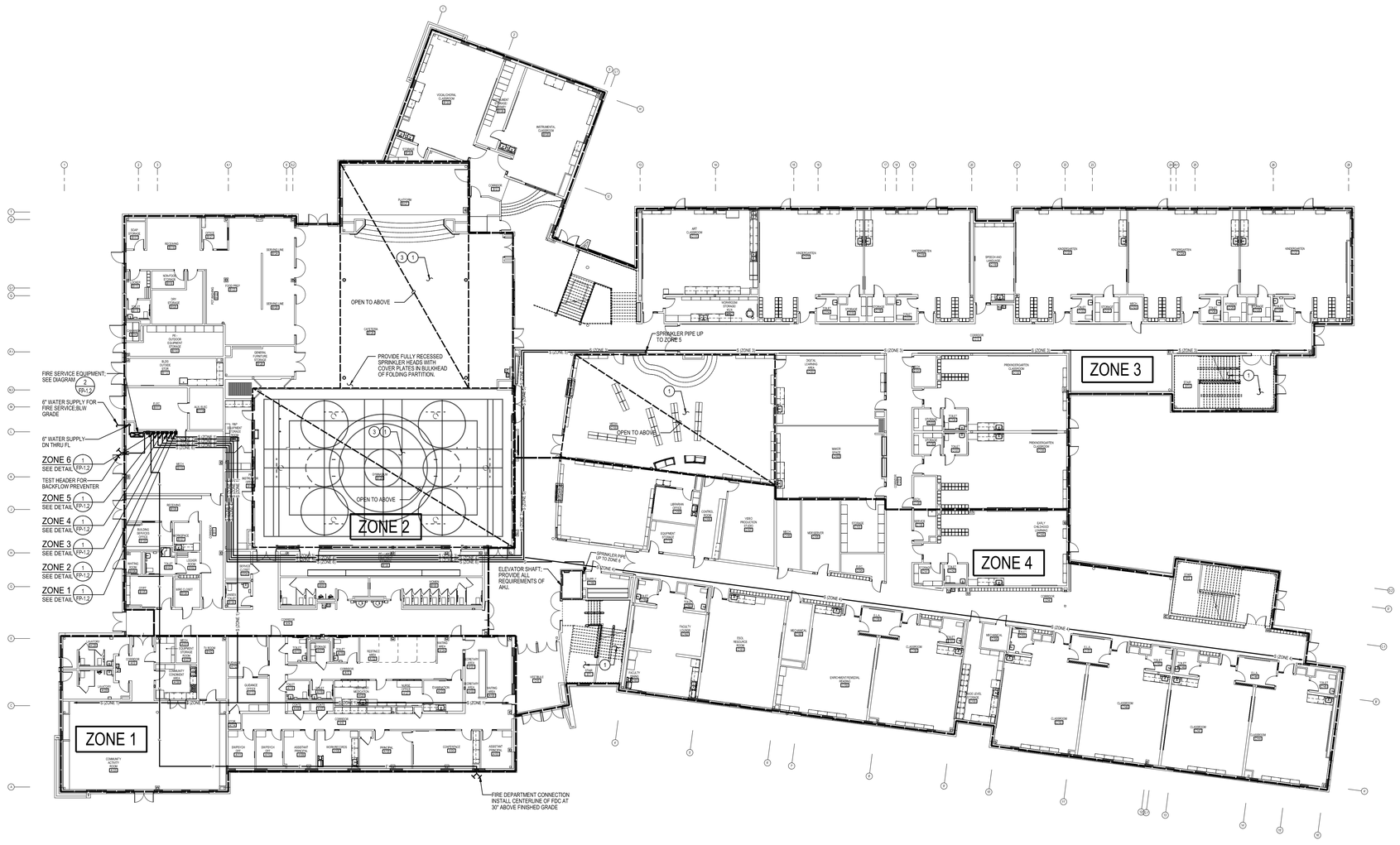

FIRST FLOOR PLAN - FIRE PROTECTION

SCALE: 1/16" = 1'-0"

NORTH

GENERAL NOTES:

A. LOCATIONS OF ANY END OF SYSTEM TEST DRAIN SHALL BE SHOWN ON THE SPRINKLER SYSTEM SHOP DRAWINGS. THESE LOCATIONS SHALL BE SUBJECT TO APPROVAL BY THE ARCHITECT.

B. DO NOT LOCATE PIPING ABOVE ELECTRICAL PANELS OR EQUIPMENT.

C. REFER TO DRAWING P-0.1 FOR SYMBOLS AND ABBREVIATIONS.

SPECIFIC NOTES:

1. LOCATION OF PIPING AND SPRINKLER HEADS IN THE AREA SHALL BE SUBJECT TO APPROVAL BY THE ARCHITECT.
2. CLERESTORY: SPRINKLER PIPING AND HEADS TO BE LOCATED SO AS NOT TO INTERFERE WITH VIEW THROUGH GLASS. SUPPORT METHOD FOR PIPING SHALL BE AS RECOMMENDED BY SKYLIGHT MANUFACTURER.
3. EXPOSED STRUCTURE IN THIS AREA. PIPING AND HEAD LOCATIONS SHALL BE CLOSELY COORDINATED WITH STRUCTURAL STEEL, LIGHTING AND MECHANICAL WORK. PIPING SHALL SLOPE WITH, AND RUN PARALLEL TO THE STRUCTURAL STEEL.

FIRE FLOW TEST DATA

- A FIRE FLOW TEST WAS PERFORMED BY THE CITY OF BALTIMORE, DEPARTMENT OF PUBLIC WORKS - BUREAU OF WATER & WASTE WATER, ENGINEERING DIVISION (410-396-0006), TEST NO. 306354 PERFORMED ON 05/20/16 AT FIRE HYDRANTS LOCATED AT INTERSECTIONS OF LANSDOWNE ROAD SOUTH OF SILERTON ROAD AND BRYANT AVENUE AT LANSDOWNE ROAD. THE WATER MAIN IS 8 INCH SIZE. THE FOLLOWING WAS RECORDED AT THE FLOW HYDRANT IDENTIFIED AS NO. 016472 (38 PSI RESIDUAL WITH 3351 GPM FLOWING AND A CORRECTED FLOW OF 2782 GPM). THE FOLLOWING WAS RECORDED AT THE RESIDUAL HYDRANT IDENTIFIED AS NO. 016482 (86 PSI STATIC/76 PSI RESIDUAL), BASED ON THIS DATA IT WAS CALCULATED THAT THE THEORETICAL FLOW AT A 20 PSI RESIDUAL PRESSURE DROP IN THE MAIN IS 2782 GPM. THIS DATA IS INCLUDED FOR INFORMATIONAL PURPOSES ONLY. THE PROPOSED HYDRAULICALLY DESIGNED SYSTEM SHALL BE BASED ON A NEW FIRE FLOW TEST TO BE PROVIDED BY THE CONTRACTOR AND PERFORMED BY THE CITY OF BALTIMORE, DEPARTMENT OF PUBLIC WORKS - BUREAU OF WATER & WASTE WATER, ENGINEERING DIVISION. THE NEW TEST SHALL BE PERFORMED ON EXISTING FIRE HYDRANTS NOTED ABOVE. CONTRACTOR SHALL PAY FOR ALL COSTS ASSOCIATED WITH THE FIRE FLOW TEST.

BUILDING FIRE PROTECTION DESIGN CRITERIA

1. ENTIRE BUILDING SHALL BE PROVIDED WITH A COMPLETE NEW AUTOMATIC FIRE PROTECTION SYSTEM INCLUDING ALL PIPING, WET PIPE SPRINKLERS, AND ACCESSORIES IN ACCORDANCE WITH PROVISIONS SET FORTH IN NFPA 13 AND AS INDICATED ON THESE PLANS.
2. THE PIPING ARRANGEMENT, HEAD LOCATIONS, AND SIZING SHALL BE BY THE CONTRACTOR IN ACCORDANCE WITH NFPA 13 AND AS INDICATED ON THE CONTRACT DRAWINGS AND SPECIFICATIONS.
3. CONTRACTOR SHALL COORDINATE SPRINKLER SYSTEM WITH ALL ARCHITECTURAL, STRUCTURAL, MECHANICAL AND ELECTRICAL BUILDING COMPONENTS. DO NOT LOCATE PIPING ABOVE ELECTRICAL PANELS OR EQUIPMENT.
4. REFER TO ARCHITECTURAL REFLECTED CEILING PLANS FOR CEILING TYPES, CONFIGURATIONS AND HEIGHTS.
5. THE SYSTEM SHALL BE HYDRAULICALLY CALCULATED. HYDRAULIC CALCULATIONS SHALL BE BASED ON A MINIMUM FLOW FOR THE MOST HYDRAULICALLY DEMANDING AREA IN ACCORDANCE WITH NFPA 13 AND AVAILABLE SITE WATER PRESSURE/FLOW.
6. HAZARD CLASSIFICATIONS FOR ALL AREAS SHALL NOT BE LESS THAN REQUIRED BY THE AUTHORITY HAVING JURISDICTION. AS A MINIMUM REQUIREMENT, ALL AREAS SHALL BE CLASSIFIED AS LIGHT HAZARD, EXCEPT THE FOLLOWING WHICH SHALL BE CLASSIFIED AS ORDINARY HAZARD (UNLESS OTHERWISE DESIGNATED BY AUTHORITIES HAVING JURISDICTION OR AS INDICATED ON PLANS):
   - A. STORAGE ROOMS
   - B. MECHANICAL ROOM
   - C. ELECTRICAL, TELEPHONE AND DATA ROOMS
   - D. BOOK STORAGE ROOMS
   - E. PLATFORM
   - F. CUSTODIAL ROOMS
   - G. GYMNASIUM
   - H. KITCHEN
   - I. CAFETERIA
7. PROVIDE GUARDS ON SPRINKLER HEADS IN STORAGE ROOMS, ELECTRICAL ROOMS, JANITORS CLOSETS, GYMNASIUM, AND ACTIVITY ROOM. GUARDS ARE ALSO REQUIRED ON ANY HEADS WITHIN 7'-6" OF FINISH FLOOR.
8. WHEN DESIGNING SPRINKLER SYSTEM, CONTRACTOR SHALL PIERCE FIRE RATED WALLS ONLY ONCE WITH PIPING. SEE ARCHITECTURAL DRAWINGS FOR LOCATIONS.
9. CONTRACTOR SHALL PROVIDE HIGH TEMPERATURE HEADS REQUIRED IN AREAS SUBJECT TO ELEVATED TEMPERATURES DUE TO HEATING EQUIPMENT, SUCH AS KILN ROOMS.
10. HEADS SHALL BE LOCATED IN THE CENTERS OF CEILING TILES.
11. SPRINKLER MAINS SHALL NOT BE LOCATED IN ELECTRICAL ROOMS. SPRINKLER PIPING AND HEADS SHALL NOT BE LOCATED ABOVE ELECTRICAL GEAR.
12. CONTRACTOR SHALL PROVIDE LAYOUT OF SPRINKLERS FOR THE ENTIRE BUILDING AND SUBMIT TO THE ARCHITECT FOR APPROVAL BEFORE PROCEEDING WITH FINAL DESIGN AND CALCULATIONS.
13. PAINT ALL EXPOSED PIPE.

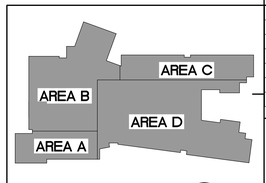

KEYPLAN
NOT TO SCALE

NORTH

SCALE: 1/16" = 1'-0"

James Posey Associates
Engineering Your Vision
Mechanical & Electrical Engineers
jamesposey.com
3112 Lord Baltimore Drive
Baltimore, MD 21244
tel 410-265-6100
fax 410-298-9820

Professional Certification. I hereby certify that these documents were prepared or approved by me, and that I am a duly licensed professional engineer under the laws of the state of Maryland. License No. 33986. Expiration date: 01-16-2017.

JPA PROJECT NO. 6542-15

11720 Beltsville Drive
Suite 600
Calverton, MD 20705
Tel: 301.595.1000
www.grimmandparker.com
G+P GRIMM AND PARKER

GP #21541

FIRST FLOOR PLAN AND NOTES - FIRE PROTECTION
LANSDOWNE ELEMENTARY SCHOOL
2301 ALMA ROAD, BALTIMORE, MD

DATE	DESCRIPTION

FP-1.1

11/17/16
BID SET

November 10, 2016 9:27 a.m.
Drawing: I:\6542-15\B-BldMech\6542FP1.DWG Kowalczar

© 2016 James Posey Associates, Inc.

© GRIMM AND PARKER, P.C. 2014

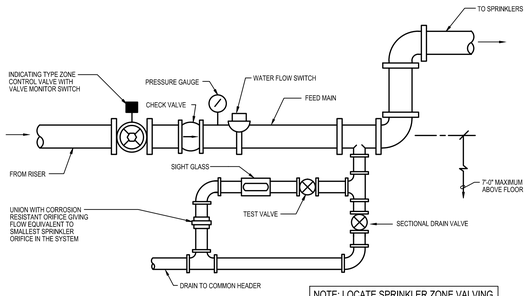

NOTE: LOCATE SPRINKLER ZONE VALVING ASSEMBLY CLOSE TO WALL. ASSEMBLY SHOWN HORIZONTAL, INSTALL IN VERTICAL.

DETAIL 1/FP1.2
TYPICAL SPRINKLER ZONE VALVE PIPING ARRANGEMENT
NOT TO SCALE

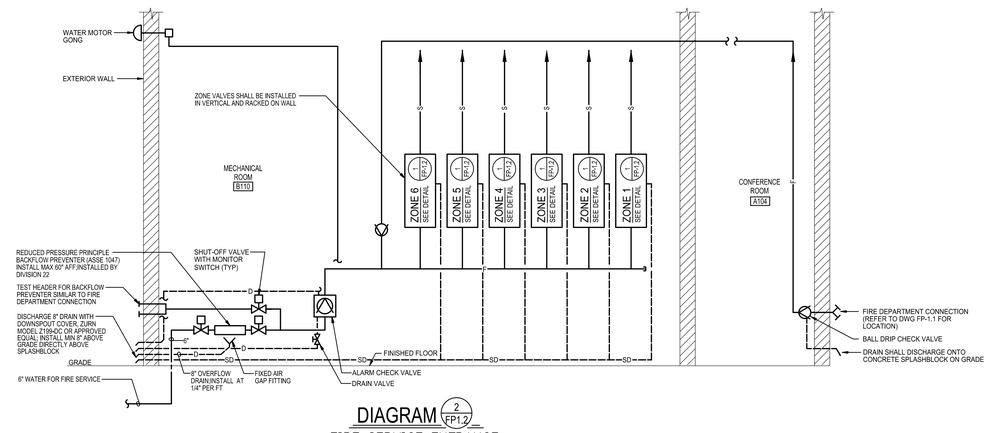

DIAGRAM 2/FP1.2
FIRE SERVICE ENTRANCE
NOT TO SCALE

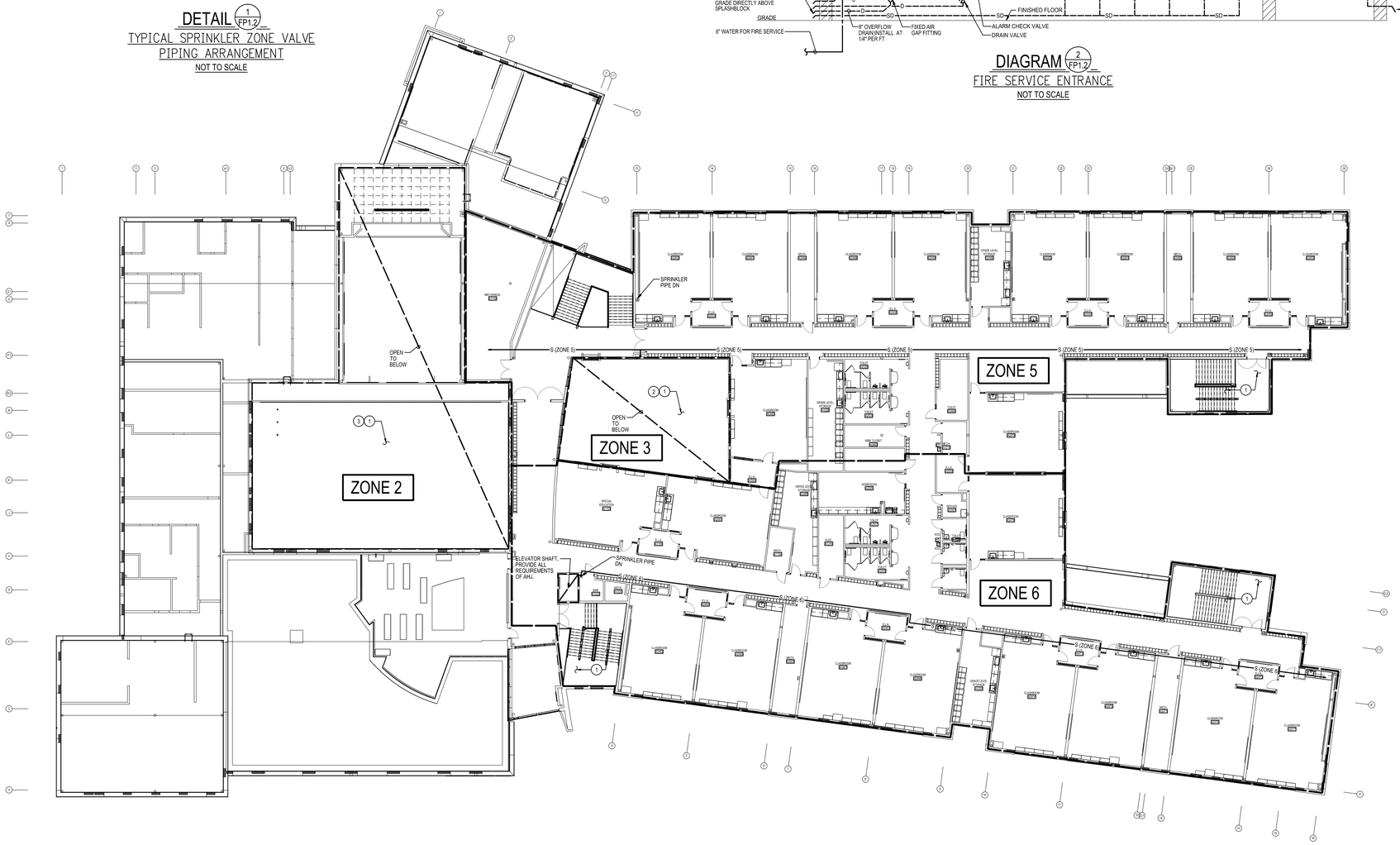

SECOND FLOOR PLAN - FIRE PROTECTION
SCALE: 1/16" = 1'-0"

NORTH

GENERAL NOTES:

A. LOCATIONS OF END OF SYSTEM TEST DRAIN SHALL BE SHOWN ON THE SPRINKLER SYSTEM SHOP DRAWINGS. THESE LOCATIONS SHALL BE SUBJECT TO APPROVAL BY THE ARCHITECT.

B. DO NOT LOCATE PIPING ABOVE ELECTRICAL PANELS OR EQUIPMENT.

C. REFER TO DRAWING P-0.1 FOR SYMBOLS AND ABBREVIATIONS.

D. REFER TO DRAWING FP-1.1 FOR BUILDING FIRE PROTECTION DESIGN CRITERIA.

SPECIFIC NOTES:

1. LOCATION OF PIPING AND SPRINKLER HEADS IN THE AREA SHALL BE SUBJECT TO APPROVAL BY THE ARCHITECT.
2. CLERESTORY: SPRINKLER PIPING AND HEADS TO BE LOCATED SO AS NOT TO INTERFERE WITH VIEW THROUGH GLASS. SUPPORT METHOD FOR PIPING SHALL BE AS RECOMMENDED BY SKYLIGHT MANUFACTURER.
3. EXPOSED STRUCTURE IN THIS AREA. PIPING AND HEAD LOCATIONS SHALL BE CLOSELY COORDINATED WITH STRUCTURAL STEEL, LIGHTING AND MECHANICAL WORK. PIPING SHALL SLOPE WITH, AND RUN PARALLEL TO THE STRUCTURAL STEEL.

16 8 0 16 32
SCALE: 1/16" = 1'-0"

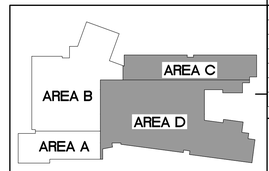

KEYPLAN
NOT TO SCALE

NORTH

James Posey Associates
Engineering Your Vision
Mechanical & Electrical Engineers
jamesposey.com
3112 Lord Baltimore Drive
Baltimore, MD 21244
tel 410-265-6100
fax 410-298-9820

Professional Certification. I hereby certify that these documents were prepared or approved by me, and that I am a duly licensed professional engineer under the laws of the state of Maryland License No. 33986. Expiration date: 01-16-2017.

JPA PROJECT NO. 6542-15

11720 Beltsville Drive
Suite 600
Calverton, MD 20705
Tel: 301.595.1000
www.grimmandparker.com
G+P GRIMM AND PARKER

GP #21541

SECOND FLOOR PLAN, DETAILS & DIAGRAMS - FIRE PROTECTION
LANSDOWNE ELEMENTARY SCHOOL
2301 ALMA ROAD, BALTIMORE, MD

DATE	DESCRIPTION

FP-1.2
11/17/16
BID SET

November 10, 2016 9:27 a.m.
Drawing: V:\6542-15\-DRAWINGS\6542FP12.DWG BY:ALAZAR

© 2016 James Posey Associates, Inc.

ELECTRICAL SYMBOLS AND ABBREVIATIONS

ABBREVATIONS

A, AMP	AMPERE
ACCU	AIR COOLED CONDENSING UNIT
AF	ABOVE FLOOR
AFG	ABOVE FINISHED GRADE
AHU	AIR HANDLING UNIT
AIC	AMPERES INTERRUPTING CAPACITY
ATC	AUTOMATIC TEMPERATURE CONTROL
ATS	AUTOMATIC TRANSFER SWITCH
A/V	AUDIO/VISUAL
AWG	AMERICAN WIRE GAUGE
BAS	BUILDING AUTOMATION SYSTEM
BCPS	BALTIMORE COUNTY PUBLIC SCHOOLS
BFG	BELOW FINISHED GRADE
BGE	BALTIMORE GAS AND ELECTRIC
BMS	BUILDING MANAGEMENT SYSTEM
C	CONDUIT
CB	CIRCUIT BREAKER
CKT	CIRCUIT
CLG	CEILING
CT	CURRENT TRANSFORMER
DDC	DIRECT DIGITAL BUILDING CONTROL
DHWRP	DOMESTIC HOT WATER RECIRCULATION PUMP
DISC	DISCONNECT
DN	DOWN
DOAS	DEDICATED OUTDOOR AIR SYSTEM UNIT
DSS	DUCTLESS SPLIT SYSTEM
DWG	DRAWING
DWH	DOMESTIC WATER HEATER
EC	EMPTY CONDUIT WITH PULL ROPE
ECB	ENCLOSED CIRCUIT BREAKER
ECUH	ELECTRIC CABINET UNIT HEATER
EF	EXHAUST FAN
ELEV	ELEVATOR
EM	EMERGENCY
EMS	ENERGY MANAGEMENT SYSTEM
EMT	ELETRICAL METALLIC TUBING
EPUH	ELECTRIC PROPELLER UNIT HEATER
EQUIP	EQUIPMENT
ERU	ENERGY RECOVERY UNIT
EUH	ELECTRIC UNIT HEATER
EWH	ELECTRIC WATER HEATER
EXT	EXTERIOR
EWC	ELECTRIC WATER COOLER
FA	FIRE ALARM
FAA	FIRE ALARM ANNUNCIATOR
FAAP	FIRE ALARM ANNUNCIATOR PANEL
FABP	FIRE ALARM BOOSTER PANEL
FACP	FIRE ALARM CONTROL PANEL
FLA	FULL LOAD AMPERES
F/S	FIRE/SMOKE (DAMPERS)
FSS	FUSED SAFETY SWITCH
G, GND	GROUND
GDS	GENERATOR DOCKING STATION
GFCI	GROUND FAULT CIRCUIT INTERRUPTER
H	"HOT" ENERGIZED CONDUCTOR
HOA	HAND-OFF-AUTOMATIC
HP	HORSEPOWER
HPU	HEAT PUMP UNIT
IBGB	INTERSYSTEM BONDING TERMINATION GROUNDING BUSBAR
IDF	INTERMEDIATE DISTRIBUTION FRAME
IT	INFORMATION TECHNOLOGY
JB	JUNCTION BOX
K-13	K-RATED TRANSFORMER
KCMIL	THOUSAND CIRCULAR MILS
KVA	KILOVOLT-AMPERES
KW	KILOWATT
LED	LIGHT EMITTING DIODE
LRA	LOCKED ROTOR AMPERES
LSI	LONG, SHORT, INSTANTANEOUS
LTG	LIGHTING
MAX	MAXIMUM
MC	METAL CLAD (CABLE)
MCA	MINIMUM CIRCUIT AMPACITY
MCB	MAIN CIRCUIT BREAKER
MDF	MAIN DISTRIBUTION FRAME
MDP	MAIN DISTRIBUTION PANEL
MFS	MAXIMUM FUSE SIZE
MH	MOUNTING HEIGHT
MIN	MINIMUM
MLO	MAIN LUGS ONLY
MOP	MAXIMUM OVERCURRENT PROTECTION
N	"NEUTRAL" GROUNDING CONDUCTOR
N.C.	NORMALLY CLOSED
NEC	NATIONAL ELECTRICAL CODE
NEMA	NATIONAL ELECTRICAL MANUFACTURERS ASSOCIATION
NFSS	NON-FUSED SAFETY SWITCH
NIC	NOT IN CONTRACT
N.O.	NORMALLY OPEN
NO.	NUMBER
NTS	NOT TO SCALE
OC	ON CENTER
OFCI	OWNER-FURNISHED, CONTRACTOR-INSTALLED
P	POLE, POLES OR PUMP
PA	PUBLIC ADDRESS
PIR	PASSIVE INFRARED
PSI	POUNDS PER SQUARE INCH
PUH	PROPELLER UNIT HEATER
PVC	POLYVINYL CHLORIDE
RECEPT	RECEPTACLE
REC	RECEPTACLE
REFRIG	REFRIGERATOR
RGS	RIGID GALVANIZED STEEL
RHPU	ROOFTOP WATER SOURCE HEAT PUMP UNIT
RM	ROOM
RX	REMOVE EXISTING
SF	SUPPLY FAN
SPD	SURGE PROTECTIVE DEVICE
SWBD	SWITCHBOARD
TBB	TELECOMMUNICATIONS BONDING BACKBONE
TC	TIME CLOCK
TGB	TELECOMMUNICATIONS GROUNDING BUSBAR
TMGB	TELECOMMUNICATIONS MAIN GROUNDING BUSBAR
TTB	TELEPHONE TERMINAL BOARD
TV	TELEVISION
TYP	TYPICAL
UG	UNDERGROUND
UGE	UNDERGROUND ELECTRICAL
UGT	UNDERGROUND TELECOMMUNICATIONS
UON	UNLESS OTHERWISE NOTED
UV	UNIT VENTILATOR
V	VOLT, VOLTS
VFD	VARIABLE FREQUENCY DRIVE
VRF	VARIABLE REFRIGERANT FLOW
VRT	VARIABLE REFRIGERANT FLOW TERMINAL UNIT
W	WATTS/WIRE, WIRES
WAP	WIRELESS ACCESS POINT
WCCU	WATER COOLED VARIABLE REFRIGERANT CONDENSING UNIT
WG	WIREGUARD
WP	WEATHERPROOF/WEATHER RESISTANT
XFMR	TRANSFORMER
Ø	PHASE
&	AND
{	BRACKET

GENERAL NOTES

1. WORK SHALL COMPLY WITH APPLICABLE CODES AND STANDARDS INCLUDING THE INTERNATIONAL BUILDING CODE (IBC), INTERNATIONAL ENERGY CONSERVATION CODE (IECC), NATIONAL ELECTRICAL CODE (NEC), AND NATIONAL FIRE PROTECTION ASSOCIATION (NFPA).
2. REFER TO ARCHITECTURAL ELEVATIONS FOR ADDITIONAL MOUNTING HEIGHT INFORMATION.
3. MOUNTING HEIGHTS ARE TO THE CENTERLINE OF WIRING DEVICES UNLESS OTHERWISE INDICATED.
4. MOUNTING HEIGHTS ARE TO BOTTOM OF LIGHTING FIXTURES UNLESS OTHERWISE INDICATED.
5. PROVIDE DEDICATED NEUTRAL CONDUCTOR FOR EACH BRANCH CIRCUIT.
6. REFER TO SCHEDULES ON E-6.X SERIES DRAWINGS FOR INFORMATION PERTAINING TO PANELBOARDS, FEEDERS, BRANCH CIRCUITS, AND CIRCUIT BREAKERS.
7. DO NOT DRILL OR PENETRATE STRUCTURAL BEAMS TO ROUTE CONDUIT UNLESS OTHERWISE APPROVED BY THE OWNER.
8. REFER TO DRAWING ME-0.1 FOR SITE ELECTRICAL WORK.

GENERAL

(1)	DENOTES REFERENCE TO SPECIFIC NOTE ON DRAWING.
1 / E-0.1	DETAIL, DIAGRAM, OR PLAN NUMBER DRAWING NUMBER WHERE DETAIL, DIAGRAM, OR PLAN IS LOCATED.
#/E#.#	DETAIL, DIAGRAM, OR PLAN REFERENCE: DETAIL, DIAGRAM, OR PLAN NUMBER/ DRAWING NUMBER
WAITING AREA	ROOM NAME
A100	ROOM NUMBER
⟨1⟩	KITCHEN EQUIPMENT DESIGNATION. REFER TO "ELECTRICAL SCHEDULE" ON DRAWING K104.

PANELBOARD NAMING SEQUENCE

R2B

BUILDING AREA (REFER TO KEY PLANS)

A	AREA A
B	AREA B
C	AREA C

FLOOR DESIGNATION

1	FIRST FLOOR
2	SECOND FLOOR

TYPE DESIGNATION (UP TO 3 LETTERS BEFORE NUMBER)

C	COMPUTER - 120/208V
ELH	EMERGENCY POWER (LIFE SAFETY) - 277/480V
ELL	EMERGENCY POWER (LIFE SAFETY) - 120/208V
ESH	EMERGENCY POWER (OPTIONAL STAND-BY) - 277/480V
ESL	EMERGENCY POWER (OPTIONAL STANB-BY) - 120/208V
K	DEDICATED KITCHEN PANEL
L	LIGHTING - 277/480V
M	MECHANICAL EQUIPMENT POWER - 277/480V
PR	DEDICATED PARKS AND RECREATION AREA PANEL
R	RECEPTACLE / GENERAL PURPOSE - 120/208V
S	DEDICATED STAGE AREA PANEL

120/208V PANELBOARD.

277/480V PANELBOARD.

FIRE ALARM

F	MANUAL PULL STATION WITH FALSE ALARM PROTECTOR, WALL MOUNTED ON RECESSED OUTLET BOX, 48" AF TO TOP OF BOX.
F 75	COMBINATION SPEAKER WITH FLASHING INDICATING STROBE LIGHT, CEILING MOUNTED ON RECESSED OUTLET BOX. NUMBER REPRESENTS CANDELA RATING. WHERE NO CANDELA RATING IS INDICATED, PROVIDE 15 CANDELA STROBE LIGHT.
30 F	COMBINATION SPEAKER WITH FLASHING INDICATING STROBE LIGHT, WALL MOUNTED ON RECESSED OUTLET BOX, 6'-8" AF TO TOP OF BOX OR 6" BELOW CEILING, WHICHEVER IS LOWER. NUMBER REPRESENTS CANDELA RATING. WHERE NO CANDELA RATING INDICATED, PROVIDE 15 CANDELA STROBE LIGHT.
30 F	FLASHING INDICATING STROBE LIGHT, CEILING MOUNTED ON RECESSED OUTLET BOX. NUMBER REPRESENTS CANDELA RATING. WHERE NO CANDELA RATING IS INDICATED, PROVIDE 15 CANDELA STROBE LIGHT.
110 F	FLASHING INDICATING STROBE LIGHT, WALL MOUNTED ON RECESSED OUTLET BOX, 6'-8" AF TO TOP OF BOX OR 6" BELOW CEILING, WHICHEVER IS LOWER. NUMBER REPRESENTS CANDELA RATING. WHERE NO CANDELA RATING IS INDICATED, PROVIDE 15 CANDELA STROBE LIGHT.
S F	FIRE ALARM SPEAKER, CEILING MOUNTED ON RECESSED OUTLET BOX.
S	SMOKE DETECTOR, CEILING MOUNTED.
	DUCT SMOKE DETECTOR WITH "CONCEALED DETECTOR INDICATING AND TEST STATION" CEILING MOUNTED BELOW DUCT DETECTOR LOCATION, UON.
D	DUCT SMOKE DETECTOR WITH AUXILIARY CONTACTS CONTROLLING NEARBY SMOKE DAMPER RELAY. REFER TO DIAGRAM 3/E-5.3. PROVIDE WITH "CONCEALED DETECTOR INDICATING AND TEST STATION" CEILING MOUNTED BELOW DUCT DETECTOR LOCATION, UON.
R	SMOKE DAMPER RELAY (SHOWN ON POWER PLANS). SEE DIAGRAM 3/E-5.3.
H	HEAT DETECTOR, CEILING MOUNTED.
CM	CONTROL MODULE.
MM	MONITORING MODULE.
RM	RELAY MODULE.
FS	SPRINKLER SYSTEM FLOW SWITCH WITH DEDICATED FIRE ALARM SYSTEM MONITORING MODULE.
VM	SPRINKLER SYSTEM VALVE MONITOR SWITCH WITH DEDICATED FIRE ALARM SYSTEM MONITORING MODULE.
	MAGNETIC DOOR HOLDER. FOR 120V POWER TO MAGNETIC DOOR HOLDER, PROVIDE 2 #12 + #12 GROUND IN 3/4" CONDUIT TO NEAREST RECEPTACLE CIRCUIT SERVING CORRIDOR.

LIGHTING CONTROLS

a A	2'x4' LIGHTING FIXTURE, TYPE AS DESIGNATED. LIGHTING FIXTURE TYPE DESIGNATION. LIGHTING CONTROL ZONE ASSIGNMENT WITHIN ROOM WHERE FIXTURE IS LOCATED.
b A	2'x4' LIGHTING FIXTURE ON EMERGENCY POWER CIRCUIT, TYPE AS DESIGNATED. LIGHTING FIXTURE TYPE DESIGNATION. LIGHTING CONTROL ZONE ASSIGNMENT WITHIN ROOM WHERE FIXTURE IS LOCATED.
S_a S_{3_b}	NON-NETWORKED SINGLE-POLE OR THREE-WAY LINE-VOLTAGE TOGGLE SWITCH, MOUNTED 48" AF TO TOP OF BOX, UON. LOWER CASE LETTER, WHERE INDICATED, REPRESENTS SWITCH CONTROLLING LIGHTING FIXTURES WITH CORRESPONDING LETTER.
S_{L3}	NON-NETWORKED 6-HOUR TIMER THREE-POLE LINE VOLTAGE TOGGLE SWITCH, MOUNTED 48" AF TO TOP OF BOX, UON.
S_D	NON-NETWORKED ELECTRONIC LOW-VOLTAGE DIMMER SWITCH, WALL MOUNTED 48" AF TO TOP OF BOX, UON. EQUAL TO LUTRON, MODEL DVELV-300P.
$S_{(1)}$	NON-NETWORKED LOW-VOLTAGE OVERRIDE SWITCH, RECESSED WALL MOUNTED 48" AF TO TOP OF BOX, UON. SUBSCRIPT IN DESIGNATES TYPE. REFER TO LIGHTING CONTROLS DIAGRAM 3B/E-7.4 FOR ADDITIONAL INFORMATION.
S_{L1} S_{L3} S_{L3D} S_{L4} S_{L5} S_{L5D}	NETWORKED LIGHTING CONTROL STATION (LOW-VOLTAGE DIGITAL WALL STATION), RECESSED WALL MOUNTED 48" AF TO TOP OF BOX, UON. SUBSCRIPT DESIGNATES SWITCH TYPE. REFER TO LIGHTING CONTROLS DIAGRAMS ON DRAWINGS E-7.3, E-7.4, AND E-7.5 FOR ADDITIONAL INFORMATION. LIGHTING CONTROL STATION DESIGNATED WITH A "WG" SHALL HAVE A PROTECTIVE COVER, EQUAL TO SAFETY TECHNOLOGY INTERNATIONAL STI-6518 BOPPER STOPPER.
S	SINGLE POLE TOGGLE SWITCH.
S_T	SPRING WOUND TIMER SWITCH.
S	NON-NETWORKED OCCUPANCY SENSOR SWITCH IN SINGLE-GANG OUTLET BOX (2-1/2" DEEP MINIMUM), RECESSED WALL MOUNTED 48" AF TO TOP OF BOX, UON. DUAL-TECHNOLOGY OCCUPANCY SENSOR WITH MANUAL ON/OFF PUSHBUTTON. REFER TO LIGHTING CONTROLS DIAGRAM 3/E-7.4 FOR ADDITIONAL INFORMATION.
P	NON-NETWORKED SWITCH PACK/POWER PACK, MOUNTED CONCEALED IN ACCESSIBLE CEILING SPACE, FOR USE WITH OCCUPANCY SENSORS NOT ASSOCIATED WITH LIGHTING RELAY ROOM CONTROLLERS. REFER TO LIGHTING CONTROLS DIAGRAM 2/E-7.3 FOR ADDITIONAL INFORMATION.
L 1	LIGHTING RELAY ROOM CONTROLLER (0-10V DIMMING ROOM CONTROLLER) IN NEMA TYPE 1 ENCLOSURE, MOUNTED CONCEALED IN ACCESSIBLE CEILING SPACE. REFER TO LIGHTING CONTROLS DIAGRAMS 1/E-7.3 AND 4/E-7.3 FOR ADDITIONAL INFORMATION. NUMBER, WHERE INDICATED, DENOTES ROOM CONTROLLER CONTROL DESIGNATOR. CONTROL DESIGNATOR INDICATES WHICH LIGHTING FIXTURES ARE CONTROLLED BY A PARTICULAR ROOM CONTROLLER WHEN THERE ARE MULTIPLE ROOM CONTROLLERS WITHIN A SINGLE SPACE OR CORRIDOR.
E	LIGHTING RELAY ROOM CONTROLLER (WITH UL 924 EMERGENCY LIGHTING INTERFACE AND POWER PACK) ON EMERGENCY LIGHTING CIRCUIT. REFER TO LIGHTING CONTROLS DIAGRAMS 1/E-7.3 AND 4/E-7.3 FOR ADDITIONAL INFORMATION.
L L_H L_{WG}	OCCUPANCY SENSOR WITH 360-DEGREE, 900 SQUARE FEET MINIMUM COVERAGE, EXCEPT 2000 SQUARE FEET MINIMUM COVERAGE IN CORRIDORS, CEILING MOUNTED, UON. PENDANT MOUNT AT 9'-0" AF IN OPEN CEILINGS. REFER TO LIGHTING CONTROLS DIAGRAMS ON DRAWING E-7.3 FOR ADDITIONAL INFORMATION. OCCUPANCY SENSORS DESIGNATED WITH AN "H" SHALL BE HIGH-BAY TYPE, SUITABLE FOR HIGH MOUNTING IN GYMNASIUM. OCCUPANCY SENSORS DESIGNATED WITH A "WG" SHALL BE PROVIDED WITH A WIRE GUARD.
D_b	NETWORKED DAYLIGHT SENSOR, CEILING MOUNTED. REFER TO LIGHTING CONTROLS DIAGRAMS 1/E-7.3 AND 4/E-7.3 FOR ADDITIONAL INFORMATION. LOWERCASE LETTER, WHERE INDICATED DESIGNATES LIGHTING CONTROL ZONE.
GTD	EXTERNAL TYPE, EMERGENCY LIGHTING CONTROL TRANSFER TRANSFER DEVICE (GENERATOR TRANSFER DEVICE), EQUAL TO BODINE GTD20A.

LIGHTING

	CEILING OUTLET WITH 2'x4' LIGHTING FIXTURE, TYPE AS DESIGNATED.
	WALL OUTLET AND LIGHTING FIXTURE, TYPE AS DESIGNATED.
	CEILING OUTLET AND LIGHTING FIXTURE, TYPE AS DESIGNATED.
	CEILING OUTLET AND LIGHTING FIXTURE, TYPE AS DESIGNATED.
	WALL OUTLET AND LIGHTING FIXTURE, TYPE AS DESIGNATED.
J	COVE LIGHT FIXTURE, TYPE AS DESIGNATED.
	LIGHTING FIXTURE ON GENERATOR CIRCUIT.
B	EMERGENCY BATTERY LIGHTING UNIT, WALL MOUNTED 7'-6" AF, TYPE AS DESIGNATED. EMERGENCY LIGHTING CIRCUIT TO EXIT SIGN SHALL BE UNSWITCHED.
	EXIT SIGN, CEILING MOUNTED OR WALL MOUNTED 7'-6" AF, UON, WITH OR WITHOUT DIRECTIONAL ARROWS AS INDICATED. SHADED AREA INDICATES STENCIL FACE. EMERGENCY LIGHTING CIRCUIT TO EXIT SIGN SHALL BE UNSWITCHED.

WIRING

	HOMERUN TO PANELBOARD. NUMBER OF ARROW HEADS INDICATES NUMBER OF CIRCUITS. NUMBER OF HASH MARKS INDICATES NUMBER OF CONDUCTORS. WHERE NO HASH MARKS APPEAR, PROVIDE TWO (2) CONDUCTORS PLUS GROUND. REFER TO PANEL SCHEDULES FOR CONDUCTOR SIZES. PROVIDE GROUND CONDUCTORS IN CONDUITS.
	CONDUIT AND WIRING RUN CONCEALED IN CEILING SPACE ABOVE CEILINGS, CONCEALED IN WALL SPACE BEHIND WALLS, AND EXPOSED IN OPEN CEILINGS, UON. PROVIDE GROUND CONDUCTORS IN CONDUITS.
	CONDUIT AND WIRING RUN UNDERGROUND WHERE SHOWN ON SITE PLAN, UNDER SLAB OR BELOW FLOOR WHERE SHOWN ON FLOOR PLANS, AND UNDER ROOF WHERE SHOWN ON ROOF PLAN. PROVIDE GROUND CONDUCTORS IN CONDUITS.
	CONDUIT TURNING DOWN.
	CONDUIT TURNING UP.
EM	CONDUIT WITH EMERGENCY LIGHTING CIRCUIT ON GENERATOR.
	CONDUIT STUB WITH INSULATED BUSHING END.
	CONDUIT SLEEVE THROUGH WALL ABOVE CEILING, SIZE AS INDICATED ON DRAWINGS. WHERE SIZE IS NOT INDICATED, PROVIDE 4" CONDUIT SLEEVE. PROVIDE BUSHINGS ON BOTH ENDS. COORDINATE LOCATION WITH PIPING, CONDUIT AND DUCTWORK.
H	HANDHOLE. REFER TO DETAIL 8/E-5.1 FOR ADDITIONAL INFORMATION.
	PULLBOX, SIZED AS REQUIRED.
J	JUNCTION BOX WITH BLANK COVER PLATE, CEILING MOUNTED.
J	SINGLE-GANG OUTLET BOX WITH BLANK COVER PLATE, RECESSED WALL MOUNTED.
J	JUNCTION BOX ON CONDUIT STUB WITH FLEXIBLE CONDUIT CONNECTION TO EQUIPMENT. REFER TO DETAIL 8/E-5.2 FOR ADDITIONAL INFORMATION.
	OPERATOR CONTROL STATION, TYPE AS INDENTIFIED, FURNISHED BY EQUIPMENT MANUFACTURER. PROVIDE WIRING CONNECTION INDICATED.

POWER

	ELECTRIC PANELBOARD (277/480V). SURFACE OR RECESSED MOUNTED.
	ELECTRIC PANELBOARD (120/208V), SURFACE OR RECESSED MOUNTED.
	BOX OR CABINET AS NOTED, SIZE AS REQUIRED. SURFACE OR RECESSED MOUNTED AS INDICATED.
T	TRANSFORMER.
SPD	SURGE PROTECTIVE DEVICE (SPD) IN NEMA TYPE 1 ENCLOSURE. MOUNT ADJACENT TO PANELBOARD WITHIN 12 INCHES OF CIRCUIT BREAKER SERVING SPD. REARRANGE CIRCUIT BREAKER LOCATION IF NECESSARY.
	PLYWOOD MOUNTING BOARD, 4' W x 8' H x 3/4" THICK, UON.
CB	ENCLOSED CIRCUIT BREAKER IN NEMA TYPE 1 ENCLOSURE, UON. MOUNT 5'-6" AF TO TOP OF ENCLOSURE, UON. SIZE AS NOTED.
D	ENCLOSED SWITCH (SAFETY SWITCH/DISCONNECT) IN NEMA TYPE 1 ENCLOSURE, UON. MOUNT 5'-6" AF TO TOP OF ENCLOSURE, UON. RATING AND FUSING AS NOTED.
S_M	MANUAL MOTOR STARTER/THERMAL OVERLOAD SWITCH, WITH OVERLOAD PROTECTION, IN NEMA TYPE 1 ENCLOSURE, UON. MOUNT ADJACENT TO EQUIPMENT BEING SERVED, UON.
	ELECTRIC MOTOR CONNECTION.
	HARD WIRED ELECTRICAL CONNECTION. CONNECT TO EQUIPMENT AS NOTED.
D	CONNECT SMOKE DAMPER TO 120V CIRCUIT VIA RELAY. PROVIDE RELAY AND JUNCTION BOXES. REFER TO DIAGRAM 3/E5.3 FOR ADDITIONAL INFORMATION.
R	SMOKE DAMPER RELAY. REFER TO DIAGRAM 3/E5.3.
VFD	VARIABLE FREQUENCY DRIVE.
	TO GROUND; GROUND TERMINATION/CONNECTION.
BB	GROUNDING BUSBAR ASSEMBLY, MOUNTED 16" AF TO BOTTOM OF ASSEMBLY. REFER TO DETAIL 2/E-5.2 FOR ADDITIONAL INFORMATION.
G T	DUPLEX GROUNDING-TYPE RECEPTACLE (NEMA 5-20R), RECESSED WALL MOUNTED 18" AF, UON. RECEPTACLES DESIGNATED WITH A "G" SHALL BE GROUND FAULT CIRCUIT INTERRUPTER (GFCI) TYPE RECEPTACLE (NEMA 5-20R). RECEPTACLES DESIGNATED WITH A "T" SHALL BE MOUNTED IN TOE SPACE OF CASEWORK. COORDINATE LOCATION IN CASEWORK WITH ARCHITECTURAL DRAWINGS.
	DOUBLE DUPLEX (QUAD) GROUNDING-TYPE RECEPTACLE (NEMA 5-20R), RECESSED WALL MOUNTED 18" AF, UON.
G	DUPLEX GROUNDING-TYPE RECEPTACLE (NEMA 5-20R), RECESSED WALL MOUNTED 8" ABOVE COUNTER, UON. WHERE THERE IS NO COUNTER, MOUNT 48" AF, UON. RECEPTACLES DESIGNATED WITH A "G" SHALL BE GROUND FAULT CIRCUIT INTERRUPTER (GFCI) TYPE (NEMA 5-20R).
	DOUBLE DUPLEX (QUAD) GROUNDING-TYPE RECEPTACLE (NEMA 5-20R), RECESSED WALL MOUNTED 8" ABOVE COUNTER, UON. WHERE THERE IS NO COUNTER, MOUNT 48" AF, UON.
G H L E TV U	DUPLEX OR DOUBLE DUPLEX (QUAD) GROUNDING-TYPE RECEPTACLE (NEMA 5-20R) ON COMPUTER POWER CIRCUIT. RECESSED WALL MOUNTED 18" AF, UON. RECEPTACLES DESIGNATED WITH A "G" SHALL BE GROUND FAULT CIRCUIT INTERRUPTER (GFCI) TYPE RECEPTACLE (NEMA 5-20R). RECEPTACLES WITH AN "H" SHALL BE RECESS MOUNTED IN CEILING TILE ABOVE PROJECTOR LOCATION, UON. RECEPTACLES WITH AN "L" SHALL BE RECESS MOUNTED 18" AF, UON. RECEPTACLES DESIGNATED WITH AN "E" SHALL BE RECESS MOUNTED IN TEACHER WARDROBE. RECEPTACLES DESIGNATED WITH "TV" SHALL BE RECESS MOUNTED 96"AF. RECEPTACLES DESIGNATED WITH A "U" SHALL HAVE TWO USB CHARGING PORTS.
G	DUPLEX GROUNDING-TYPE RECEPTACLE (NEMA 5-20R) ON GENERATOR STANDBY POWER CIRCUIT.
	DUPLEX GROUNDING-TYPE RECEPTACLE (NEMA 5-20R, UON), RECESSED MOUNTED ON CEILING TILE FOR CEILING MOUNTED PROJECTOR OR KITCHEN EQUIPMENT. COORDINATE EXACT LOCATION OF PROJECTORS WITH SCHOOL. PROVIDE SIX FEET OF TYPE MC CABLE (NEATLY COILED) FROM PROJECTOR RECEPTACLE TO OUTLET BOX IN CEILING SPACE ABOVE PROJECTOR RECEPTACLE.
	DUPLEX GROUNDING-TYPE RECEPTACLE (NEMA 5-20R), STUBBED UP FROM FLOOR, UON. REFER TO DETAIL 8/E-5.2 FOR ADDITIONAL INFORMATION.
	SPECIAL PURPOSE, GROUNDING-TYPE RECEPTACLE OUTLET, RECESSED WALL MOUNTED 18" AF, UON. REFER TO DRAWINGS FOR SPECIFIC RATINGS INFORMATION AND NEMA CONFIGURATION.
FB	FLOOR BOX FOR POWER AND COMMUNICATIONS, RECESSED IN FLOOR, EQUAL TO WIREMOLD "EVOLUTION SERIES" EFB6. COORDINATE FINISH OF FLOOR BOX COVER WITH ARCHITECT. COORDINATE WITH ARCHITECTURAL DRAWINGS FOR EXACT LOCATIONS. REFER TO DETAIL 6/E-5.2 FOR ADDITIONAL INFORMATION.
	POKE-THROUGH DEVICE FOR POWER AND COMMUNICATIONS, RECESSED IN FLOOR, EQUAL TO WIREMOLD "EVOLUTION SERIES" POKE-THRU, CATALOG NO. 8ATC. COORDINATE FINISH OF POKE-THROUGH COVER WITH ARCHITECT. COORDINATE WITH ARCHITECTURAL DRAWINGS FOR EXACT LOCATIONS. PROVIDE WITH TWO NEMA 5-20R RECEPTACLES. REFER TO DETAIL 7/E-5.2 FOR ADDITIONAL INFORMATION.
	OVERHEAD CORD REEL. REFER TO DETAIL 4/E-5.2 FOR ADDITIONAL INFORMATION.

LIGHTNING PROTECTION

REFER TO SPECIFICATION SECTION 26 41 13 LIGHTNING PROTECTION FOR STRUCTURES

James Posey Associates
Engineering Your Vision
Mechanical & Electrical Engineers
jamesposey.com
3112 Lord Baltimore Drive
Baltimore, MD 21244
tel 410-265-6100
fax 410-298-9820

Professional Certification. I hereby certify that these documents were prepared or approved by me, and that I am a duly licensed professional engineer under the laws of the State of Maryland, License No. 24861, Expiration date: 02-24-2018.

JPA PROJECT NO. 6542-15

11720 Beltsville Drive
Suite 600
Calverton, MD 20705
Tel: 301.595.1000
www.grimmandparker.com
G+P GRIMM AND PARKER

GP #21541

SYMBOLS LIST AND ABBREVIATIONS

LANSDOWNE ELEMENTARY SCHOOL
2301 ALMA ROAD, BALTIMORE, MD

DATE	DESCRIPTION

E-0.1

11/17/16
BID SET

© GRIMM AND PARKER, P.C. 2014
© 2016 James Posey Associates, Inc.

© GRIMM AND PARKER, P.C. 2014

GENERAL NOTES:

A. INFORMATION SHOWN ON THIS DRAWING PERTAINING TO EXISTING CONDITIONS HAS BEEN OBTAINED FROM AVAILABLE BUILDING DRAWINGS OR GENERAL FIELD OBSERVATIONS AND MAY NOT INDICATE ACTUAL EXISTING CONDITIONS IN DETAIL OR DIMENSION. THE CONTRACTOR IS RESPONSIBLE FOR DETERMINING THE ACTUAL EXISTING CONDITIONS PRIOR TO FABRICATION OR PERFORMANCE OF ANY WORK. SHOULD CONDITIONS BE DISCOVERED THAT PREVENT EXECUTION OF THE WORK AS INDICATED, IMMEDIATELY NOTIFY THE ARCHITECT IN WRITING AND AWAIT DIRECTION BEFORE PROCEEDING WITH THE WORK.

B. REFER TO SHEETS E-7.2, E-7.3, E-7.4, AND E-7.5 FOR LIGHTING CONTROL SCHEMES, DIAGRAMS, AND SCHEDULES.

SPECIFIC NOTES:

1. RUN CONDUITS CONNECTING TO EXTERIOR FIXTURES THROUGH INTERIOR CEILING SPACES.

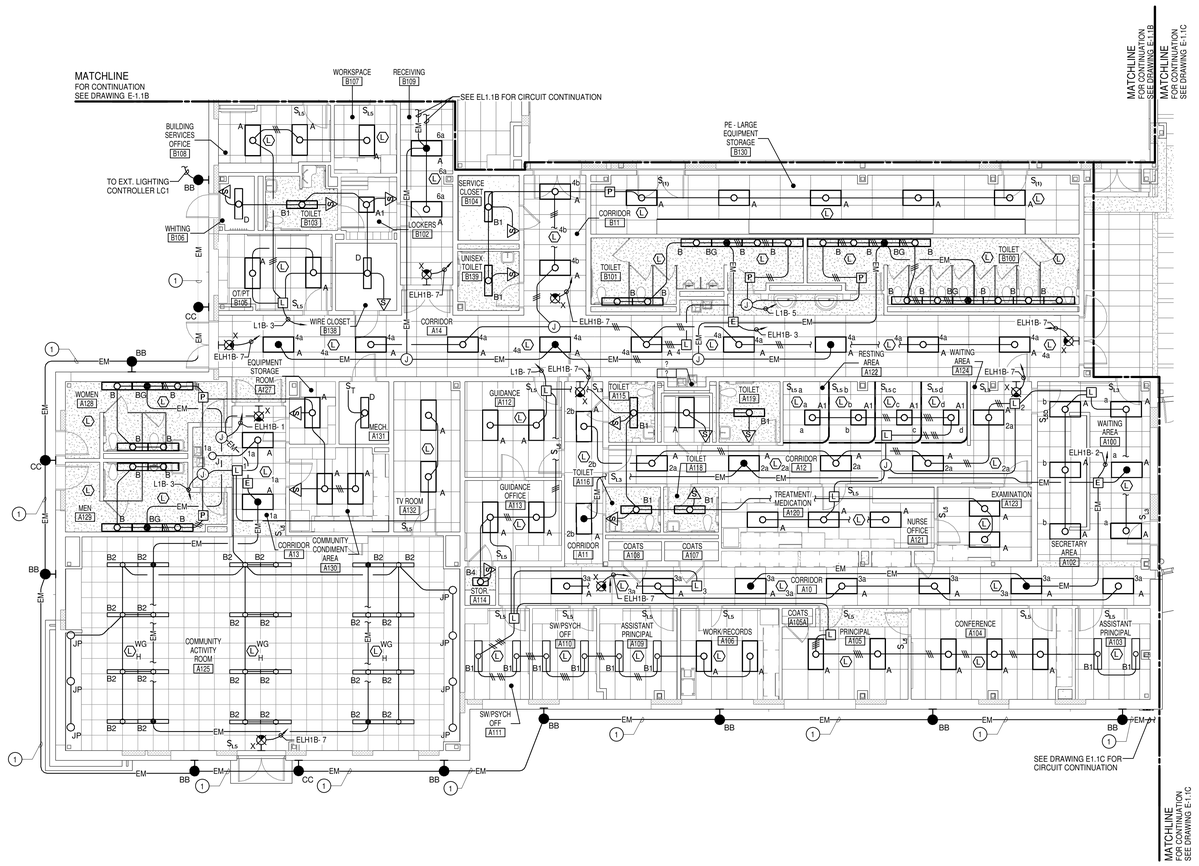

FIRST FLOOR PLAN - AREA A - LIGHTING

SCALE: 1/8" = 1'-0"

KEYPLAN
NOT TO SCALE

NORTH

8 4 0 8 16

SCALE: 1/8" = 1'-0"

James Posey Associates
Engineering your vision
Mechanical & Electrical Engineers
jamesposey.com
3112 Lord Baltimore Drive
Baltimore, MD 21244
tel 410-265-6100
fax 410-298-9820

Professional Certification.
I hereby certify that these documents were prepared or approved by me, and that I am a duly licensed professional engineer under the laws of the state of Maryland. License No. 24366, Expiration date: 02-24-2018.

JPA PROJECT NO. 5648-15

11720 Beltsville Drive
Suite 600
Calverton, MD 20705
Tel: 301.595.1000
www.grimmandparker.com
GRIMM AND PARKER

GP #21541

FIRST FLOOR PLAN - AREA A - LIGHTING

LANSDOWNE ELEMENTARY SCHOOL
2301 ALMA ROAD, BALTIMORE, MD

DATE	DESCRIPTION
10/7/16	ADD NO.1

E-1.1A

11/17/16
BID SET

© 2016 James Posey Associates, Inc.

© GRIMM AND PARKER, P.C. 2014

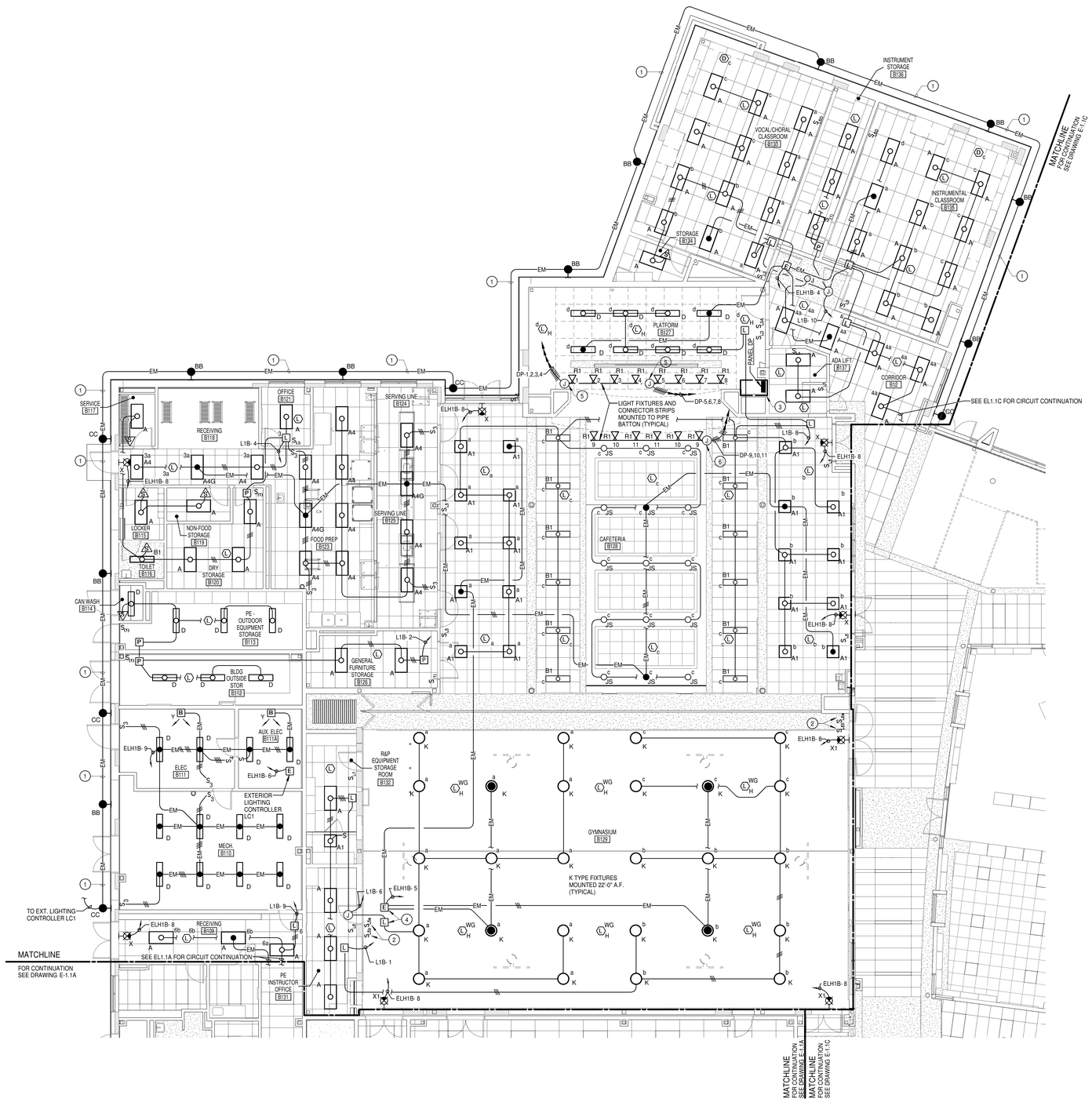

FIRST FLOOR PLAN - AREA B - LIGHTING

SCALE: 1/8" = 1'-0"

GENERAL NOTES:

A. INFORMATION SHOWN ON THIS DRAWING PERTAINING TO EXISTING CONDITIONS HAS BEEN OBTAINED FROM AVAILABLE BUILDING DRAWINGS OR GENERAL FIELD OBSERVATIONS AND MAY NOT INDICATE ACTUAL EXISTING CONDITIONS IN DETAIL OR DIMENSION. THE CONTRACTOR IS RESPONSIBLE FOR DETERMINING THE ACTUAL EXISTING CONDITIONS PRIOR TO FABRICATION OR PERFORMANCE OF ANY WORK. SHOULD CONDITIONS BE DISCOVERED THAT PREVENT EXECUTION OF THE WORK AS INDICATED, IMMEDIATELY NOTIFY THE ARCHITECT IN WRITING AND AWAIT DIRECTION BEFORE PROCEEDING WITH THE WORK.

B. REFER TO SHEETS E-7.2, E-7.3, E-7.4, AND E-7.5 FOR LIGHTING CONTROL SCHEMES, DIAGRAMS, AND SCHEDULES.

SPECIFIC NOTES:

1. RUN CONDUITS CONNECTING TO EXTERIOR FIXTURES THROUGH INTERIOR CEILING SPACES.
2. PROVIDE PROTECTIVE COVER ON TOP OF EACH LIGHTING CONTROL STATION IN GYMNASIUM, EQUAL TO SAFETY TECHNOLOGY INTERNATIONAL STI-6518 BOPPER STOPPER WITH SPRING LOADED HINGE, CLEAR POLYCARBONATE COVER.
3. CENTRAL DIMMING CONTROL STATION. REFER TO ELEVATION 9/E-5.2.
4. MOUNT LIGHTING CONTROLLERS ABOVE CEILING IN PE INSTRUCTOR OFFICE B131.
5. PROVIDE CONNECTOR STRIP TO SUSPEND R1 TYPE FIXTURES, MANUFACTURED BY ETC WITH CATALOG NUMBER 9912-4AO/4-C-21.
6. PROVIDE CONNECTOR STRIP TO SUSPEND R1 TYPE FIXTURES, MANUFACTURED BY ETC WITH CATALOG NUMBER 9918-6AO/6-C-21.

James Posey Associates
Engineering your vision
Mechanical & Electrical Engineers
jamesposey.com
3112 Lord Baltimore Drive
Baltimore, MD 21244
tel 410-265-6100
fax 410-298-9820

Professional Certification. I hereby certify that these documents were prepared or approved by me, and that I am a duly licensed professional engineer under the laws of the state of Maryland. License No. 24361, Expiration date: 02-24-2018.

JPA PROJECT NO. 6646-15

11720 Beltsville Drive
Suite 600
Calverton, MD 20705
Tel: 301.595.1000
www.grimmandparker.com
GRIMM AND PARKER

GP #21541

FIRST FLOOR PLAN - AREA B -LIGHTING

LANSDOWNE ELEMENTARY SCHOOL
2301 ALMA ROAD, BALTIMORE, MD

DATE	DESCRIPTION
10/7/16	ADD NO.1

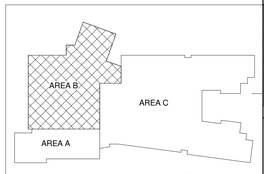

KEYPLAN
NOT TO SCALE

NORTH

8 4 0 8 16
SCALE: 1/8" = 1'-0"

E-1.1B
11/17/16
BID SET

© 2016 James Posey Associates, Inc.

© GRIMM AND PARKER, P.C. 2014

FIRST FLOOR PLAN - AREA C - LIGHTING

SCALE: 1/8" = 1'-0"

GENERAL NOTES:

A. INFORMATION SHOWN ON THIS DRAWING PERTAINING TO EXISTING CONDITIONS HAS BEEN OBTAINED FROM AVAILABLE BUILDING DRAWINGS OR GENERAL FIELD OBSERVATIONS AND MAY NOT INDICATE ACTUAL EXISTING CONDITIONS IN DETAIL OR DIMENSION. THE CONTRACTOR IS RESPONSIBLE FOR DETERMINING THE ACTUAL EXISTING CONDITIONS PRIOR TO FABRICATION OR PERFORMANCE OF ANY WORK. SHOULD CONDITIONS BE DISCOVERED THAT PREVENT EXECUTION OF THE WORK AS INDICATED, IMMEDIATELY NOTIFY THE ARCHITECT IN WRITING AND AWAIT DIRECTION BEFORE PROCEEDING WITH THE WORK.

B. REFER TO SHEETS E-7.2, E-7.3, E-7.4, AND E-7.5 FOR LIGHTING CONTROL SCHEMES, DIAGRAMS, AND SCHEDULES.

SPECIFIC NOTES:

1. CIRCUIT CONTINUED ON SECOND FLOOR LIGHTING PLAN. SEE E-1.2C.
2. CONNECT TO LIGHTS AT TOP OF ELEVATOR SHAFT.
3. RUN CONDUITS CONNECTING TO EXTERIOR FIXTURES THROUGH INTERIOR CEILING SPACES.
4. REFER TO SHEET E-1.2C FOR LIGHTING PLANS.
5. FIXTURE MOUNTED 7'-6" ABOVE LANDING.

8 4 0 8 16
SCALE: 1/8" = 1'-0"

© 2016 James Posey Associates, Inc.

James Posey Associates
Engineering your vision
Mechanical & Electrical Engineers
jamesposey.com
3112 Lord Baltimore Drive
Baltimore, MD 21244
tel 410-265-6100
fax 410-298-9820

Professional Certification.
I hereby certify that these documents were prepared or approved by me, and that I am a duly licensed professional engineer under the laws of the state of Maryland. License No. 25431, Expiration date: 02-24-2018.

JPA PROJECT NO. 6548-15

11720 Beltsville Drive
Suite 600
Calverton, MD 20705
Tel: 301.595.1000
www.grimmandparker.com
GRIMM AND PARKER

GP #21541

FIRST FLOOR PLAN - AREA C -LIGHTING

LANSDOWNE ELEMENTARY SCHOOL
2301 ALMA ROAD, BALTIMORE, MD

DATE	DESCRIPTION

E-1.1C

11/17/16
BID SET

© GRIMM AND PARKER, P.C. 2014

GENERAL NOTES:

A. INFORMATION SHOWN ON THIS DRAWING PERTAINING TO EXISTING CONDITIONS HAS BEEN OBTAINED FROM AVAILABLE BUILDING DRAWINGS OR GENERAL FIELD OBSERVATIONS AND MAY NOT INDICATE ACTUAL EXISTING CONDITIONS IN DETAIL OR DIMENSION. THE CONTRACTOR IS RESPONSIBLE FOR DETERMINING THE ACTUAL EXISTING CONDITIONS PRIOR TO FABRICATION OR PERFORMANCE OF ANY WORK. SHOULD CONDITIONS BE DISCOVERED THAT PREVENT EXECUTION OF THE WORK AS INDICATED, IMMEDIATELY NOTIFY THE ARCHITECT IN WRITING AND AWAIT DIRECTION BEFORE PROCEEDING WITH THE WORK.

B. REFER TO SHEETS E-7.2, E-7.3, E-7.4, AND E-7.5 FOR LIGHTING CONTROL SCHEMES, DIAGRAMS, AND SCHEDULES.

SPECIFIC NOTES:

1. CIRCUIT CONTINUED ON FIRST FLOOR LIGHTING PLAN. SEE E-1.1C.
2. FIXTURE MOUNTED AT 13' 6" ABOVE FIRST FLOOR.
3. CONNECT TO ELEVATOR SHAFT RECEPTACLE CIRCUIT.
4. RUN CONDUITS CONNECTING TO EXTERIOR FIXTURES THROUGH INTERIOR CEILING SPACES.

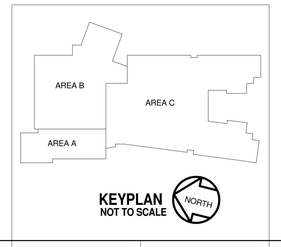

© 2016 James Posey Associates, Inc.

SECOND FLOOR PLAN - AREA C - LIGHTING

SCALE: 1/8" = 1'-0"

8 4 0 8 16

SCALE: 1/8" = 1'-0"

James Posey Associates
Engineering your vision
Mechanical & Electrical Engineers
jamesposey.com
3112 Lord Baltimore Drive
Baltimore, MD 21244
tel 410-265-6100
fax 410-298-9820

Professional Certification. I hereby certify that these documents were prepared or approved by me, and that I am a duly licensed professional engineer under the laws of the state of Maryland. License No. 24361, Expiration date: 02-24-2018.

JPA PROJECT NO. 6546-15

GRIMM AND PARKER
11720 Beltsville Drive
Suite 600
Calverton, MD 20705
Tel: 301.595.1000
www.grimmandparker.com

GP #21541

SECOND FLOOR PLAN - AREA C - LIGHTING

LANSDOWNE ELEMENTARY SCHOOL
2301 ALMA ROAD, BALTIMORE, MD

DATE	DESCRIPTION

E-1.2C

11/17/16
BID SET

© GRIMM AND PARKER, P.C. 2014

SPECIFIC NOTES:

1. COORDINATE RECEPTACLE TYPE WITH OWNER'S EQUIPMENT.
2. MOUNT IN RECESSED MOUNTED NEMA TYPE 1 CABINET.
3. PROVIDE 2P-30A-240V NFSS. FOR VRT UNITS, MOUNT IN ACCESSIBLE CEILING SPACE IN CLOSE PROXIMITY TO ASSOCIATED VRT UNITS.
4. PROVIDE 3P-30A-600V NFSS.
5. MOUNT IN ACCESSIBLE CEILING SPACE.

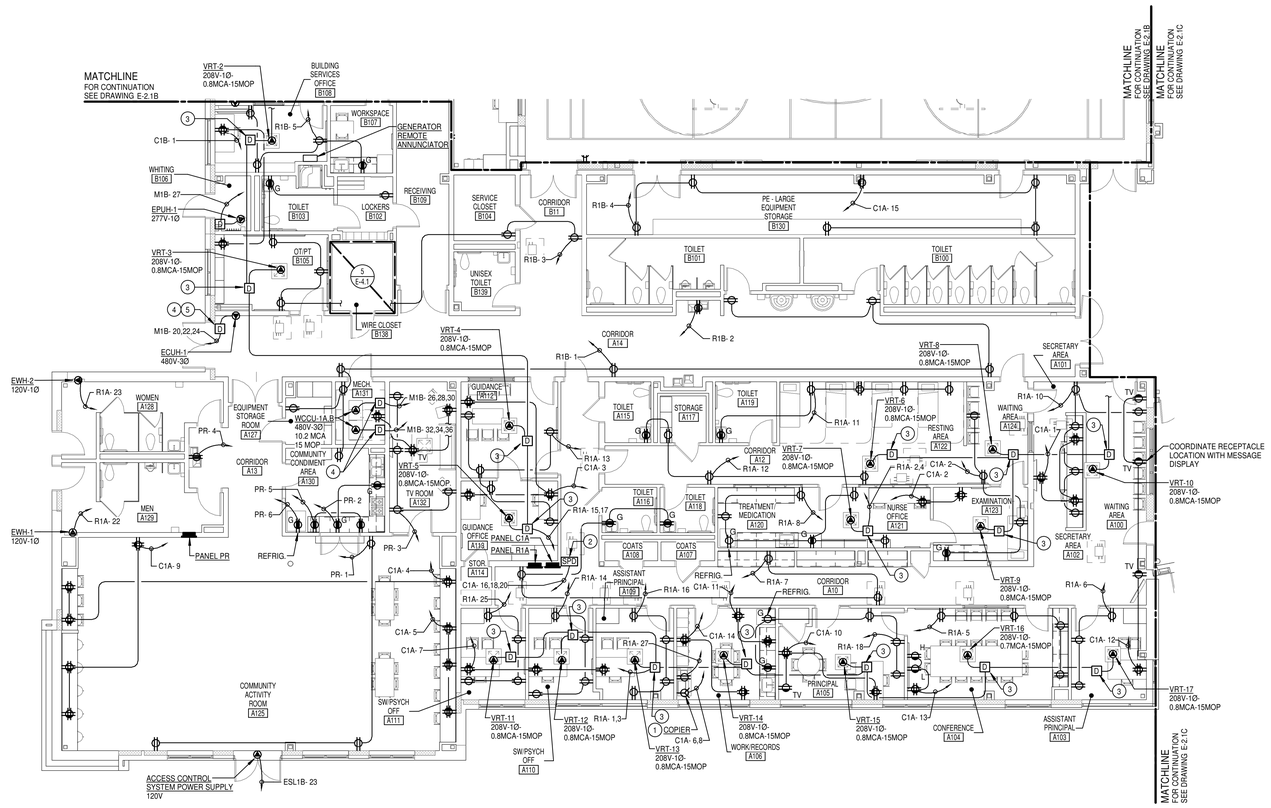

FIRST FLOOR PLAN - AREA A - POWER

SCALE: 1/8" = 1'-0"

8 4 0 8 16

SCALE: 1/8" = 1'-0"

KEYPLAN
NOT TO SCALE

NORTH

James Posey Associates
Engineering your vision
Mechanical & Electrical Engineers
jamesposey.com
3112 Lord Baltimore Drive
Baltimore, MD 21244
tel 410-265-6100
fax 410-298-9820

Professional Certification.
I hereby certify that these documents were prepared or approved by me, and that I am a duly licensed professional engineer under the laws of the State of Maryland. License No. 24361, Expiration date: 02-24-2018.

JPA PROJECT NO. 5648-15

GRIMM AND PARKER
11720 Beltsville Drive
Suite 600
Calverton, MD 20705
Tel: 301.595.1000
www.grimmandparker.com

GP #21541

FIRST FLOOR PLAN - AREA A - POWER

LANSDOWNE ELEMENTARY SCHOOL
2301 ALMA ROAD, BALTIMORE, MD

DATE	DESCRIPTION
10/7/16	ADD NO.1

E-2.1A

11/17/16
BID SET

© 2016 James Posey Associates, Inc.

© GRIMM AND PARKER, P.C. 2014

SPECIFIC NOTES:

1. PROVIDE 3P-60A-600V NFSS.
2. MOUNT RECEPTACLE IN SOUND SYSTEM CABINET.
3. PROVIDE 4 PAIR/22AWG WIRING FROM ADA LIFT CALL STATION TO ADA LIFT MAST. INSTALL MANUFACTURER PROVIDED CALL STATION AND OUTLET BOX AT 48"AF. MAKE FINAL WIRING CONNECTIONS.
4. ADA LIFT MAST: 120V.
5. MOTORIZED BACKBOARD: 120V. RECEPTACLE FOR MOTORIZED BACKBOARD UNIT. PROVIDE NEMA L14-20 RECEPTACLE. COORDINATE RECEPTACLE WITH WINCH MOTOR LOCATION.
6. MOTORIZED PARTITION: 208V-3PHASE. INSTALL INTERLOCK SWITCHES FURNISHED BY DOOR MANUFACTURER. COORDINATE LOCATION AND WIRING REQUIREMENTS WITH PARTITION MANUFACTURER.
7. PROVIDE 3P-30A-240V DISCONNECT SWITCH. LOCATION AS DIRECTED BY PARTITION MANUFACTURER AND ARCHITECT.
8. PARTITION CONTROLLER PROVIDED BY PARTITION MANUFACTURER. INSTALLED AND WIRED BY ELECTRICAL CONTRACTOR. (TYPICAL OF 2).
9. TO PARTITION MOTOR CONTROLLER AS DIRECTED BY PARTITION MANUFACTURER. WIRING PER PARTITION MANUFACTURER'S RECOMMENDATION.
10. PROVIDE 2P-30A-600V NFSS.
11. MOUNT IN ACCESSIBLE CEILING SPACE.
12. MOUNT RECEPTACLE IN IN SOUND SYSTEM CABINET.
13. PROVIDE 2P-30A-240V NFSS.
14. ADA LIFT CALL STATION.
15. LIGHTING CONTROLLER FOR PARKING LOT LIGHTING CIRCUITS. PROGRAM WITH CONTROL SCHEME L12.
16. LIGHTING CONTROLLER FOR SCHOOL SIGN CIRCUITS. PROGRAM WITH CONTROL SCHEME L12.
17. INSTALL AND CONNECT MANUFACTURER PROVIDED CONTROL SWITCH.

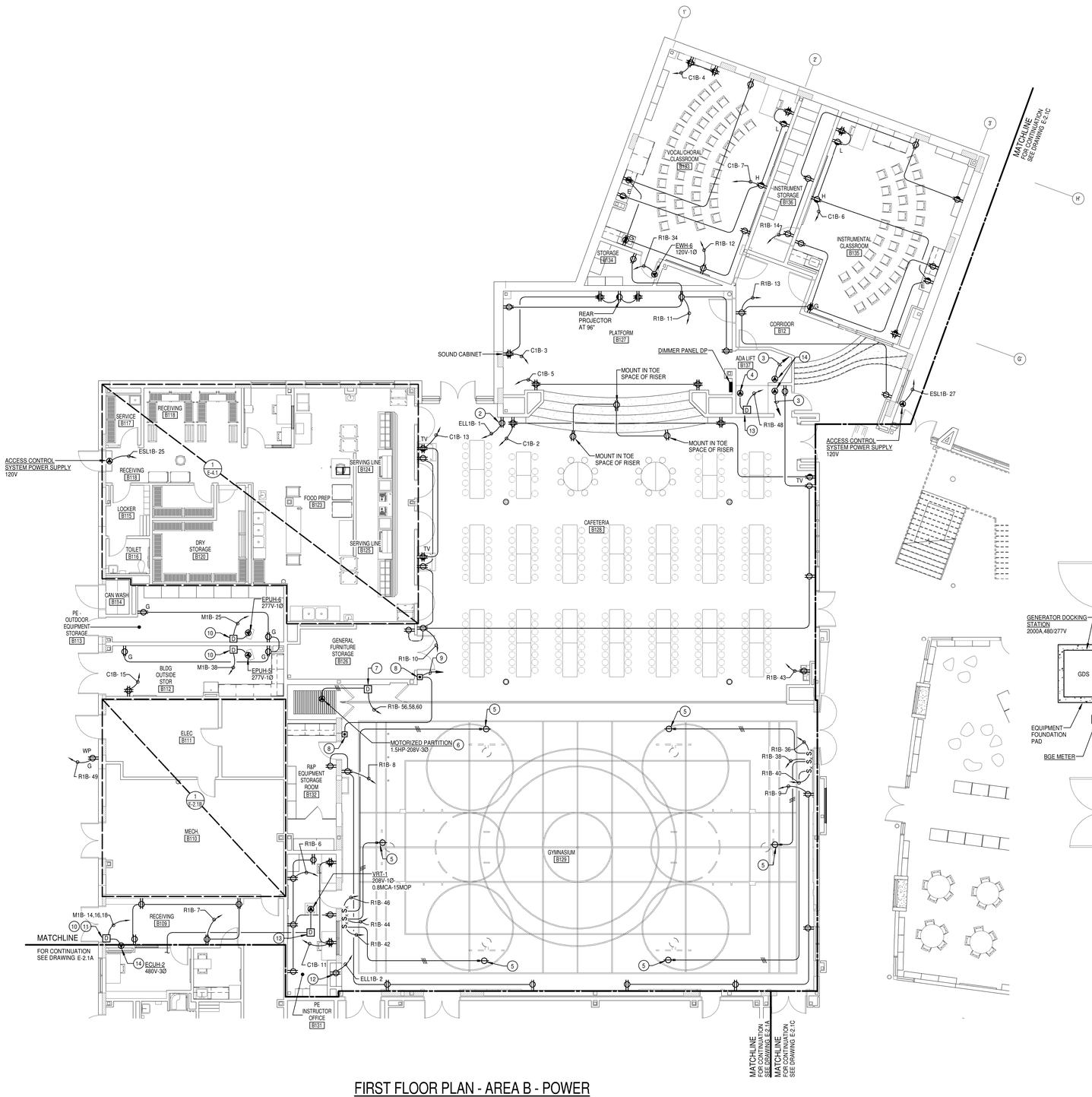

FIRST FLOOR PLAN - AREA B - POWER

SCALE: 1/8" = 1'-0"

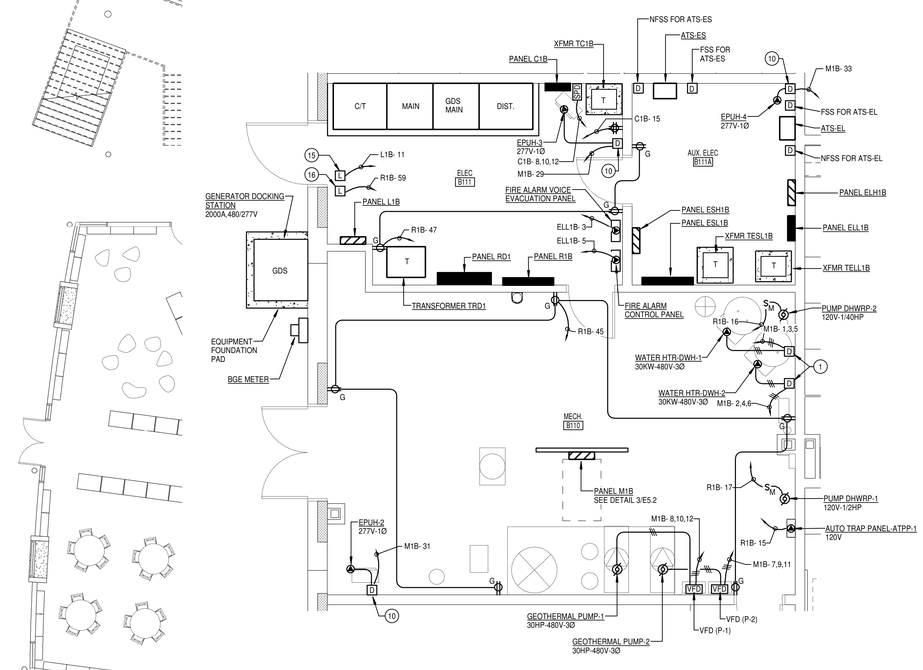

1 E-2.1B PART PLAN - ELECTRIC ROOM

SCALE: 1/4" = 1'-0"

SCALE: 1/4" = 1'-0"

SCALE: 1/8" = 1'-0"

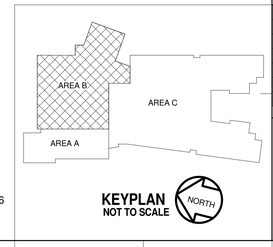

KEYPLAN NOT TO SCALE

James Posey Associates
Engineering your vision
3112 Lord Baltimore Drive
Baltimore, MD 21244
tel 410-265-6100
fax 410-298-9820
Mechanical & Electrical Engineers
jamesposey.com

Professional Certification. I hereby certify that these documents were prepared or approved by me, and that I am a duly licensed professional engineer under the laws of the state of Maryland. License No. 24431, Expiration date: 02-24-2018.

JPA PROJECT NO. 6548-15

11720 Beltsville Drive
Suite 600
Calverton, MD 20705
Tel: 301.595.1000
www.grimmandparker.com
GRIMM AND PARKER

GP #21541

FIRST FLOOR PLAN - AREA B - POWER

LANSDOWNE ELEMENTARY SCHOOL
2301 ALMA ROAD, BALTIMORE, MD

DATE	DESCRIPTION
10/7/16	ADD NO.1

E-2.1B

11/17/16
BID SET

© 2016 James Posey Associates, Inc.

© GRIMM AND PARKER, P.C. 2014

SPECIFIC NOTES:

1. PROVIDE 2P-30A-600V NFSS.
2. PROVIDE 3P-30A-600V NFSS.
3. 120V CIRCUIT FOR DOOR ACCESS CONTROL.
4. CENTER IN BETWEEN SHELVES.
5. MOUNT 3" ABOVE SHELF AND ROTATE 90 DEGREES.
6. PROVIDE 2P-30A-240V NFSS.
7. PROVIDE 3P-30A-600V NFSS. MOUNT IN ACCESSBLE CEILING SPACE.
8. PROVIDE 3/4" EMPTY CONDUIT.
9. PROVIDE OUTLET BOX FOR POWER ASSISTED DOOR PUSHPAD.
10. MOUNT IN ACCESSIBLE CEILING SPACE.

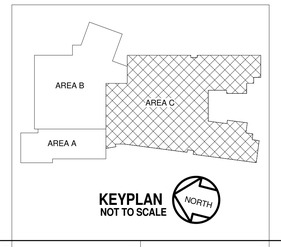

KEYPLAN
NOT TO SCALE

FIRST FLOOR PLAN - AREA C - POWER

SCALE: 1/8" = 1'-0"

8 4 0 8 16
SCALE: 1/8" = 1'-0"

© 2016 James Posey Associates, Inc.

James Posey Associates
Engineering your vision
Mechanical & Electrical Engineers
jamesposey.com
3112 Lord Baltimore Drive
Baltimore, MD 21244
tel 410-265-6100
fax 410-298-9820

Professional Certification. I hereby certify that these documents were prepared or approved by me, and that I am a duly licensed professional engineer under the laws of the state of Maryland. License number 25443, Expiration date: 02-24-2018.

JPA PROJECT NO. 5646-15

GRIMM AND PARKER
11720 Beltsville Drive
Suite 600
Calverton, MD 20705
Tel: 301.595.1000
www.grimmandparker.com

GP #21541

FIRST FLOOR PLAN - AREA C - POWER

LANSDOWNE ELEMENTARY SCHOOL
2301 ALMA ROAD, BALTIMORE, MD

DATE	DESCRIPTION
10/7/16	ADD NO.1

E-2.1C

11/17/16
BID SET

© GRIMM AND PARKER, P.C. 2014

SECOND FLOOR PLAN - AREA C - POWER

SCALE: 1/8" = 1'-0"

SPECIFIC NOTES:

1. PROVIDE 2P-30A-600V NFSS.
2. PROVIDE 3P-30A-600V NFSS.
3. MOUNT ABOVE COUNTER.
4. PROVIDE 2#12+1#12G-3/4"C TO ASSOCIATED OUTDOOR UNIT.
5. PROVIDE MANUFACTURERS RECOMMENDED CONTROL WIRING IN 3/4"C TO ASSOCIATED OUTDOOR UNIT.
6. PROVIDE 2P-30A-240V NFSS. FOR VRT UNITS, MOUNT ABOVE ACCESSIBLE CEILING SPACE IN CLOSE PROXIMITY TO ASSOCIATED VRT UNIT.
7. SOLAR LAB: DISPLAY/DASHBOARD - NEC DISPLAY SOLUTIONS MODEL V552-PC. CONFIGURE MONITOR TO DISPLAY DASHBOARD FOR EACH PV ARRAY (TOTAL OF 4), ON SCREEN SIMULTANIOUSLY IN 4 SEPERATE TILES. PROVIDE WALL MOUNT FOR DISPLAY. PROVIDE UNDER ALTERNATE #3 ONLY.

SCALE: 1/8" = 1'-0"

© 2016 James Posey Associates, Inc.

James Posey Associates
Engineering your vision
Mechanical & Electrical Engineers
jamesposey.com
3112 Lord Baltimore Drive
Baltimore, MD 21244
tel 410-265-6100
fax 410-298-9820

Professional Certification.
I hereby certify that these documents were prepared or approved by me, and that I am a duly licensed professional engineer under the laws of the state of Maryland. License No. 24366, Expiration date: 02-24-2018.

JPA PROJECT NO. 6548-15

11720 Beltsville Drive
Suite 600
Calverton, MD 20705
Tel: 301.595.1000
www.grimmandparker.com
GRIMM AND PARKER

GP #21541

SECOND FLOOR PLAN - AREA C - POWER

LANSDOWNE ELEMENTARY SCHOOL
2301 ALMA ROAD, BALTIMORE, MD

DATE	DESCRIPTION
10/7/16	ADD NO.1

E-2.2C

11/17/16
BID SET

© GRIMM AND PARKER, P.C. 2014

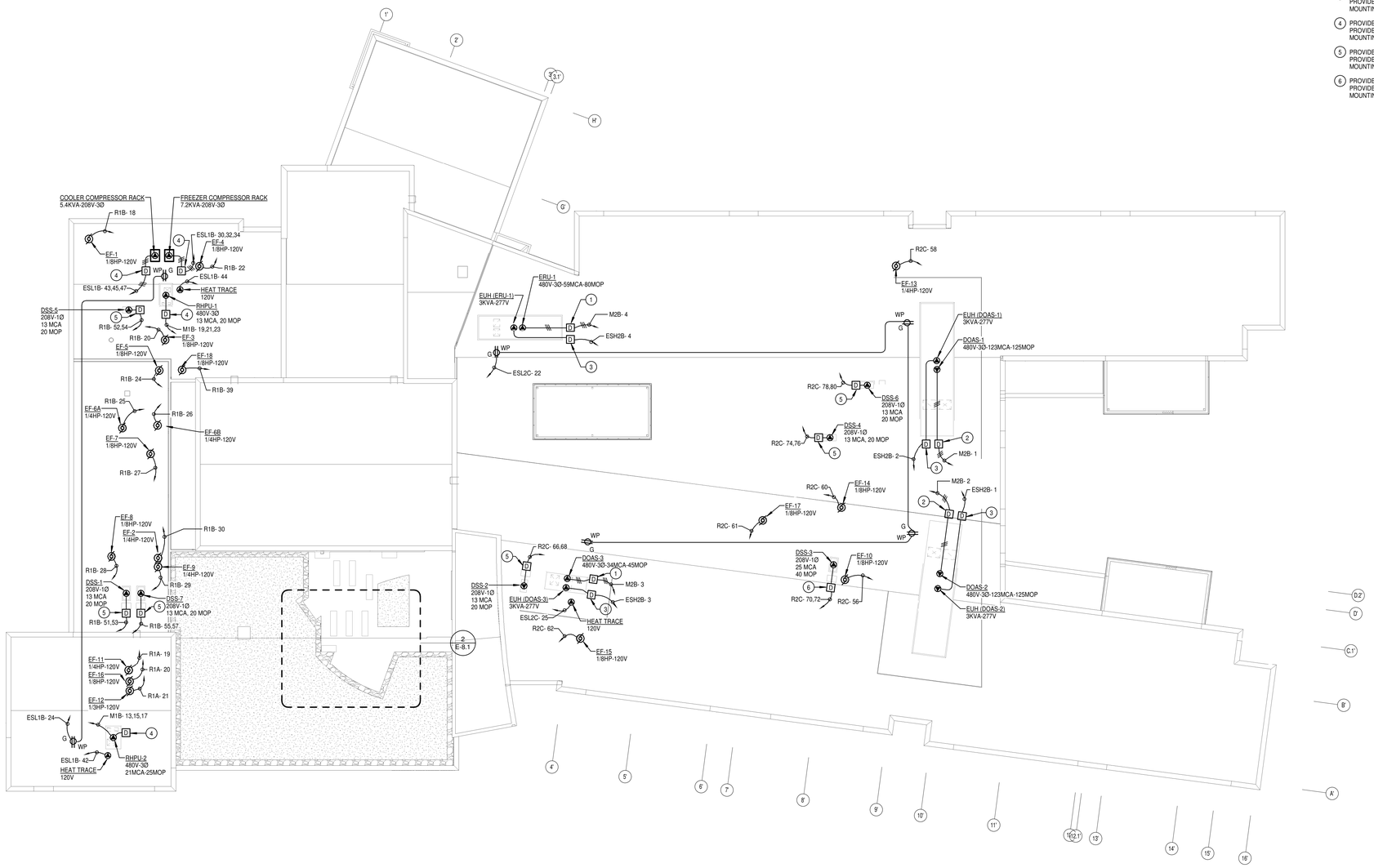

ROOF PLAN - POWER

SCALE: 1/16" = 1'-0"

SPECIFIC NOTES:

1. PROVIDE 3P-100A-600V NFSS IN NEMA TYPE 3R ENCLOSURE. PROVIDE STEEL PIPE SUPPORTS AS REQUIRED FOR MOUNTING.
2. PROVIDE 3P-200A-600V NFSS IN NEMA TYPE 3R ENCLOSURE. PROVIDE STEEL PIPE SUPPORTS AS REQUIRED FOR MOUNTING.
3. PROVIDE 2P-30A-600V NFSS IN NEMA TYPE 3R ENCLOSURE. PROVIDE STEEL PIPE SUPPORTS AS REQUIRED FOR MOUNTING.
4. PROVIDE 3P-30A-600V NFSS IN NEMA TYPE 3R ENCLOSURE. PROVIDE STEEL PIPE SUPPORTS AS REQUIRED FOR MOUNTING.
5. PROVIDE 2P-30A-240V NFSS IN NEMA TYPE 3R ENCLOSURE. PROVIDE STEEL PIPE SUPPORTS AS REQUIRED FOR MOUNTING.
6. PROVIDE 2P-60A-240V NFSS IN NEMA TYPE 3R ENCLOSURE. PROVIDE STEEL PIPE SUPPORTS AS REQUIRED FOR MOUNTING.

KEYPLAN
NOT TO SCALE

NORTH

8 4 0 8 16
SCALE: 1/8" = 1'-0"

James Posey Associates
Engineering your vision
Mechanical & Electrical Engineers
jamesposey.com
3112 Lord Baltimore Drive
Baltimore, MD 21244
tel 410-265-6100
fax 410-298-9820

Professional Certification.
I hereby certify that these documents were prepared or approved by me, and that I am a duly licensed professional engineer under the laws of the state of Maryland. License No. 24361, Expiration date: 02-24-2018.

JPA PROJECT NO. 5648-15

11720 Beltsville Drive
Suite 600
Calverton, MD 20705
Tel: 301.595.1000
www.grimmandparker.com
GRIMM AND PARKER

GP #21541

ROOF PLAN

LANSDOWNE ELEMENTARY SCHOOL
2301 ALMA ROAD, BALTIMORE, MD

DATE	DESCRIPTION
10/7/16	ADD NO.1

E-2.3

11/17/16
BID SET

© 2016 James Posey Associates, Inc.

© GRIMM AND PARKER, P.C. 2014

SPECIFIC NOTES:

1. CONNECT TO LIGHTING RELAY ROOM CONTROLLER LOCATED ABOVE CEILING IN CORRIDOR THAT CONTROLS LIGHTING IN RESPECTIVE SPACE. COORDINATE EXACT LOCATION WITH LIGHTING PLANS.

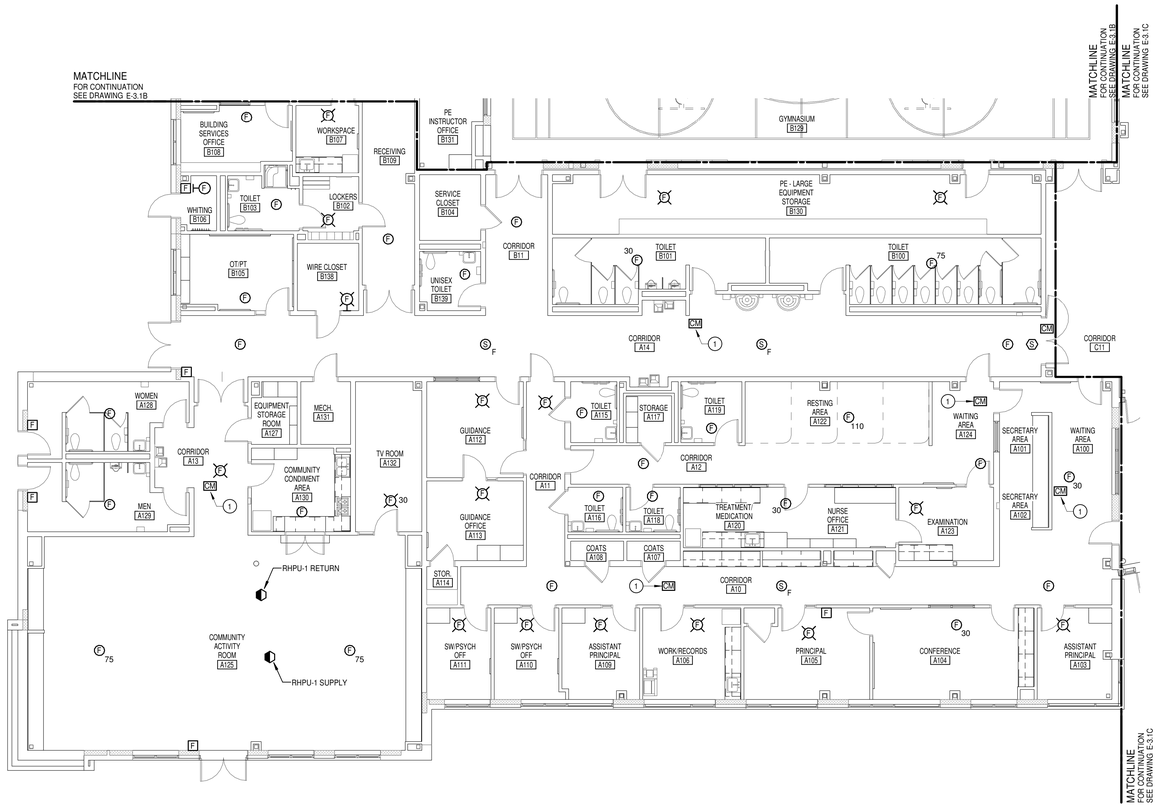

FIRST FLOOR PLAN - AREA A - FIRE ALARM

SCALE: 1/8" = 1'-0"

KEYPLAN
NOT TO SCALE

NORTH

8 4 0 8 16
SCALE: 1/8" = 1'-0"

© 2016 James Posey Associates, Inc.

James Posey Associates
Engineering your vision
Mechanical & Electrical Engineers
jamesposey.com
3112 Lord Baltimore Drive
Baltimore, MD 21244
tel 410-265-6100
fax 410-298-9820

Professional Certification.
I hereby certify that these documents were prepared or approved by me, and that I am a duly licensed professional engineer under the laws of the state of Maryland. License number 20,849; Expiration date: 02-24-2018.

JPA PROJECT NO. 5648-15

GRIMM AND PARKER
11720 Beltsville Drive
Suite 600
Calverton, MD 20705
Tel: 301.595.1000
www.grimmandparker.com

GP #21541

FIRST FLOOR PLAN - AREA A - FIRE ALARM

LANSDOWNE ELEMENTARY SCHOOL
2301 ALMA ROAD, BALTIMORE, MD

DATE	DESCRIPTION

E-3.1A

11/17/16
BID SET

© GRIMM AND PARKER, P.C. 2014

SPECIFIC NOTES:

1. CONNECT TO LIGHTING RELAY ROOM CONTROLLER LOCATED ABOVE CEILING IN CORRIDOR AND CAFETERIA THAT CONTROLS LIGHTING IN RESPECTIVE SPACE. COORDINATE EXACT LOCATION WITH LIGHTING PLANS.

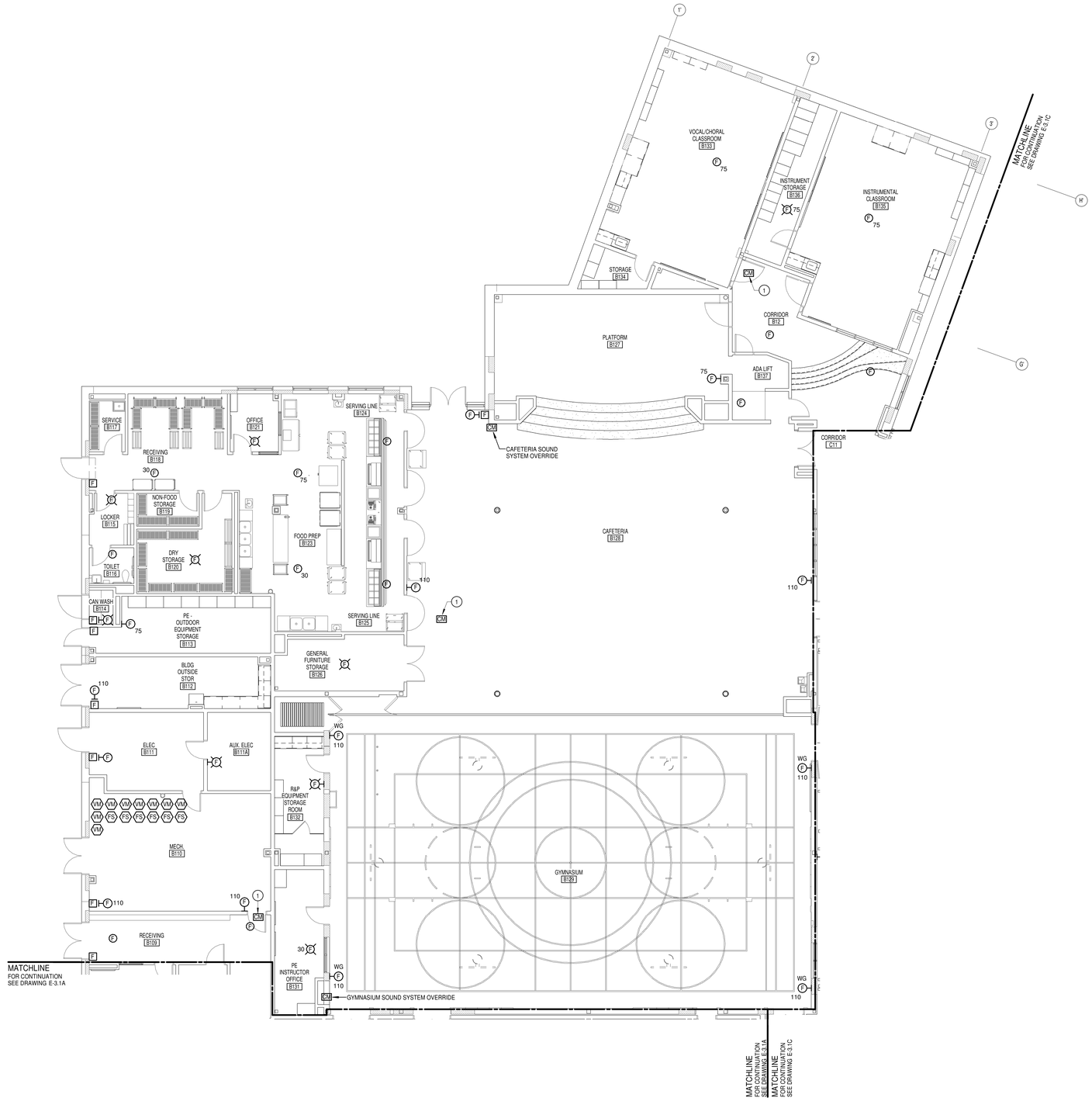

FIRST FLOOR PLAN - AREA B - FIRE ALARM

SCALE: 1/8" = 1'-0"

KEYPLAN
NOT TO SCALE

8 4 0 8 16
SCALE: 1/8" = 1'-0"

© 2016 James Posey Associates, Inc.

James Posey Associates
Engineering Your Vision
3112 Lord Baltimore Drive
Baltimore, MD 21244
tel 410-265-6100
fax 410-298-9820
Mechanical & Electrical Engineers
jamesposey.com

Professional Certification. I hereby certify that these documents were prepared or approved by me, and that I am a duly licensed professional engineer under the laws of the state of Maryland. License No. 24361, Expiration date: 02-24-2018.

STATE OF MARYLAND JAIME E. ZAMBRANO RODRIGUEZ No. 24361 LICENSED PROFESSIONAL ENGINEER

JPA PROJECT NO. 5848-15

11720 Beltsville Drive
Suite 600
Calverton, MD 20705
Tel: 301.595.1000
www.grimmandparker.com
GRIMM AND PARKER

GP #21541

FIRST FLOOR PLAN - AREA B - FIRE ALARM

LANSDOWNE ELEMENTARY SCHOOL
2301 ALMA ROAD, BALTIMORE, MD

DATE	DESCRIPTION

E-3.1B

11/17/16
BID SET

© GRIMM AND PARKER, P.C. 2014

SPECIFIC NOTES:

1. PROVIDE 135-DEGREE HEAT DETECTOR WITHIN 18" OF EACH SPRINKLER HEAD IN ELEVATOR PIT.
2. CONNECT TO LIGHTING RELAY ROOM CONTROLLER LOCATED ABOVE CEILING IN CORRIDOR THAT CONTROLS LIGHTING IN RESPECTIVE SPACE. COORDINATE EXACT LOCATION WITH LIGHTING PLANS.

FIRST FLOOR PLAN - AREA C - FIRE ALARM

SCALE: 1/8" = 1'-0"

SCALE: 1/8" = 1'-0"

© 2016 James Posey Associates, Inc.

James Posey Associates
Engineering your vision
Mechanical & Electrical Engineers
jamesposey.com
3112 Lord Baltimore Drive
Baltimore, MD 21244
tel 410-265-6100
fax 410-298-9820

Professional Certification.
I hereby certify that these documents were prepared or approved by me, and that I am a duly licensed professional engineer under the laws of the state of Maryland. License No. 23401, Expiration date: 02-24-2018.

JPA PROJECT NO. 5646-15

11720 Beltsville Drive
Suite 600
Calverton, MD 20705
Tel: 301.595.1000
www.grimmandparker.com
GRIMM AND PARKER

GP #21541

FIRST FLOOR PLAN - AREA C - FIRE ALARM

LANSDOWNE ELEMENTARY SCHOOL
2301 ALMA ROAD, BALTIMORE, MD

DATE	DESCRIPTION

E-3.1C

11/17/16
BID SET

© GRIMM AND PARKER, P.C. 2014

SPECIFIC NOTES:

1. PROVIDE 135-DEGREE HEAT DETECTOR WITHIN 18" OF EACH SPRINKLER HEAD IN ELEVATOR SHAFT AND ELEVATOR MACHINE ROOM.
2. CONNECT TO LIGHTING RELAY ROOM CONTROLLER LOCATED ABOVE CEILING IN CORRIDOR THAT CONTROLS LIGHTING IN RESPECTIVE SPACE. COORDINATE EXACT LOCATION WITH LIGHTING PLANS.

3 / E-3.2C SECOND FLOOR PLAN - AREA C - EMR C256
SCALE: 1/4" = 1'-0"

SECOND FLOOR PLAN - AREA C - FIRE ALARM
SCALE: 1/8" = 1'-0"

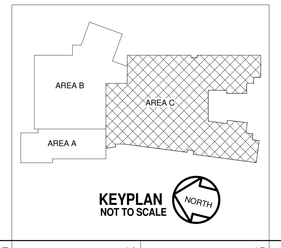

8 4 0 8 16
SCALE: 1/8" = 1'-0"

© 2016 James Posey Associates, Inc.

James Posey Associates
Engineering your vision
Mechanical & Electrical Engineers
jamesposey.com
3112 Lord Baltimore Drive
Baltimore, MD 21244
tel 410-265-6100
fax 410-298-9820

Professional Certification.
I hereby certify that these documents were prepared or approved by me, and that I am a duly licensed professional engineer under the laws of the state of Maryland. License number: 25431, Expiration date: 02-24-2018.

JPA PROJECT NO. 5648-15

11720 Beltsville Drive
Suite 600
Calverton, MD 20705
Tel: 301.595.1000
www.grimmandparker.com
GRIMM AND PARKER

GP #21541

SECOND FLOOR PLAN - AREA C - FIRE ALARM

LANSDOWNE ELEMENTARY SCHOOL
2301 ALMA ROAD, BALTIMORE, MD

DATE	DESCRIPTION

E-3.2C
11/17/16
BID SET

© GRIMM AND PARKER, P.C. 2014

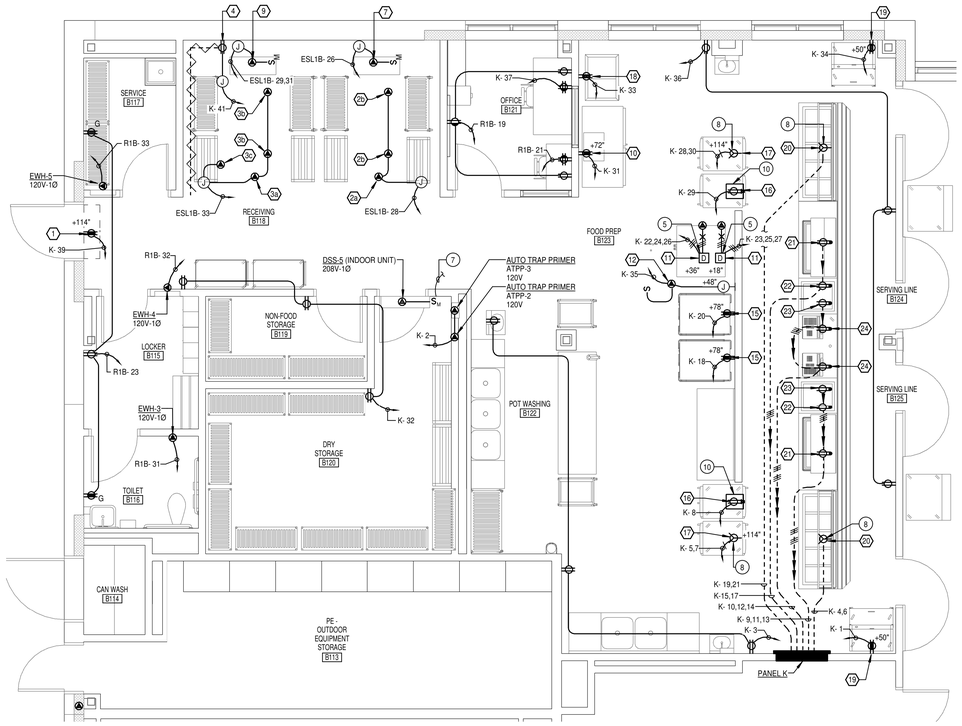

1 E-4.1 PART PLAN - FOOD PREP
SCALE: 1/4" = 1'-0"

ELECTRICAL SCHEDULE

	R.I.#	HP	KW	AMP	VOLT	PH	R.I. HGT. A.F.F.	DESCRIPTION	E.Q. NO.	CORD & PLUG	RECEP.	DISC.	J.B.
	1			5.2	120	1	114"	FLY FAN RECEP.	1		0		
	2						114"	BRANCH TO:					0
	2a		.150		120	1		DOOR LIGHT, HEATER, ALARM	4				
	2b		32W		120	1		LIGHT FIXTURE	4				
	3						114"	BRANCH TO:					0
	3a		.150		120	1		DOOR LIGHT, HEATER, ALARM	4				
	3b		32W		120	1		LIGHT FIXTURE	4				
	3c		.100		120	1		HEATED RELIEF PORT	4				
	4		.150		120	1		DRAIN LINE HEAT TAPE RECEP.	4		0		0
	5			2.4	120	1	114"	AIR-SCREEN DOOR RECEP.	4		0		
(1)	6			15.0	208	3	STUB	COOLER COMPRESSOR RACK	5				0
	7			1.8	120	1	114"	COOLER BLOWER COIL	5				0
(1)	8			20.0	208	3	STUB	FREEZER COMPRESSOR RACK	6				0
	9			15.1	208	1	114"	FREEZER BLOWER COIL	6				0
	10			6.4	120	1	72"	BULK MILK COOLER RECEP.	21		0		
	11			31.0	208	3	18"/36"	CONVECTION OVEN (2)	23				0
	12		1.2		120	1	114"	EXHAUST CANOPY LIGHT	24				0
	13						48"	EXHAUST CANOPY LIGHT SWITCH	24				0
	14						48"	EXHAUST CANOPY FAN SWITCH	24				0
	15			12.0	120	1	78"	HEATED TRANSPORT CABINET RECEP.	25		0		
	16			9.8	120	1	@CLG.	PASS-THRU REFRIGERATOR RECEP.	26		0		
	17			6.3	208	1	@CLG.	PASS-THRU WARMING CABINET RECEP.	27	0	0		
	18			4.5	120	1	50"	ICE CREAM CABINET RECEP.	28		0		
	19			4.2	120	1	50"	MILK COOLER RECEP.	29		0		
(2)	20			32.0	120/208	3	STUB	HOT FOOD COUNTER RECEP.	31A		0		
(2)	21			8.0	120	1	STUB	FROST TOP COUNTER RECEP.	31B		0		
(2)	22			15.0	120	1	STUB	SOLID TOP COUNTER RECEP.	31C		0		
(2)	23			2.7	120	1	STUB	ICE CREAM DISPLAY MERCHANDISER RECEP.	32		0		
(2)	24			20.0(Cir)	120	1	STUB	CASH REGISTER	33		0		

(1) SEE SHEET MECHICAL ROOF PLAN FOR EXACT LOCATION. ITEM FURNISHED W/ MAIN-FUSED DISCONNECT SWITCH.
(2) SEE FLOOR RECEPTACLE DETAIL 8/E-5.2

SPECIFIC NOTES:

1. PROVIDE NEMA L5-30R RECEPTACLE TO TOP OF DATA RACK.
2. PROVIDE NEMA L6-30R RECEPTACLE TO TOP OF DATA RACK.
3. PROVIDE QUADRUPLEX NEMA 5-20R RECPTACLE MOUNT TO TOP OF DATA RACK.
4. NEMA L5-30R RECEPTACLE.
5. PROVIDE 3P-60A-240V FSS IN NEMA TYPE 4X STAINLESS STEEL ENCLOSURE, FUSED PER MANUFACTURERS RECOMMENDATION.
6. PROVIDE 3P-60A-600V ELEVATOR DISCONNECTING SWITCH FOR ELEVATOR CONTROLLER.
7. PROVIDE 2#12+1#12G-3/4"C TO ASSOCIATED OUTDOOR UNIT.
8. PROVIDE RECEPTACLE FOR REFERENCED KITCHEN EQUIPMENT. COORDINATE RECEPTACLE TYPE WITH KITCHEN EQUIPMENT SPECIFICATIONS.
9. MONITORING MODULE TO INCLUDE:
   -EFERGY ENGAGE EZ HUB 3G SYSTEM.
   -ALL SYSTEM COMPONENTS MOUNTED IN NEMA 1 ENCLOSURE EQUAL TO HOFFMAN CONTINUOUS HINGE SERIES.
10. PROVIDE NEMA L5-20R TWIST-LOCK RECEPTACLE. PROVIDE CORD AND MATCHING NEMA L5-20P PLUG AND MAKE CONNECTIONS TO EQUIPMENT.

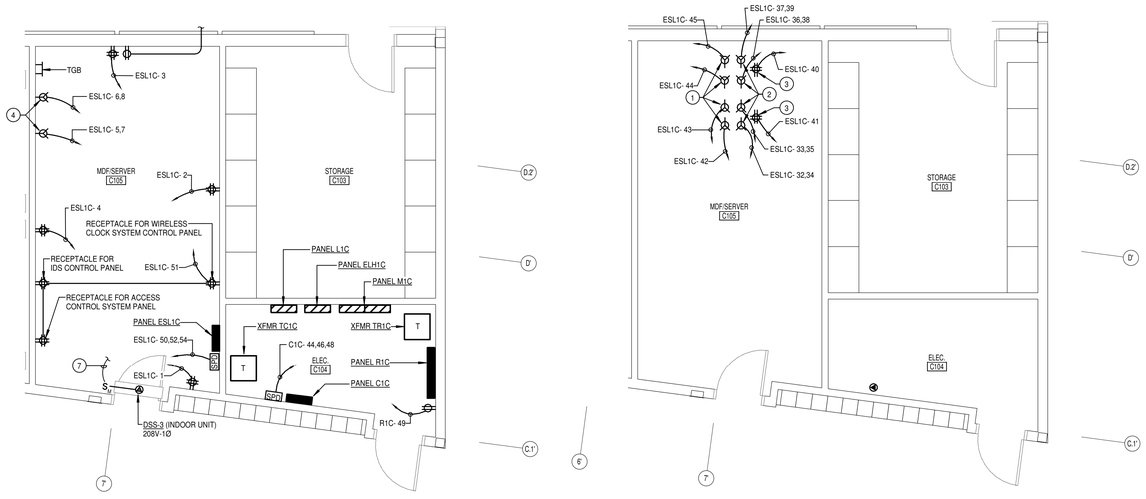

2 E-4.1 PARTIAL FLOOR PLAN - MDF/SERVER C105 AND ELEC C104
SCALE: 1/4" = 1'-0"

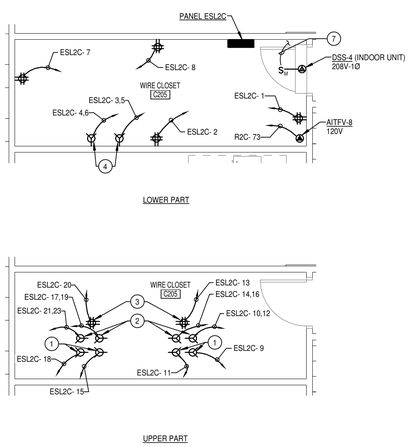

3 E-4.1 PART FLOOR PLAN - WIRE CLOSET C205
SCALE: 1/4" = 1'-0"

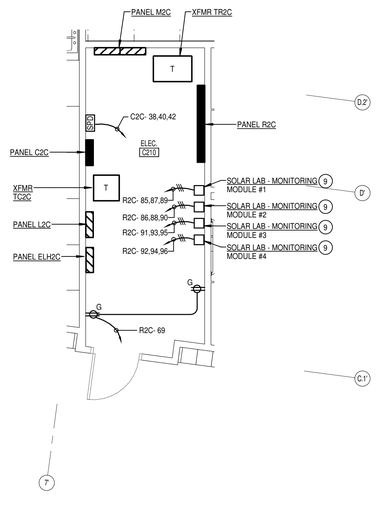

4 E-4.1 PART FLOOR PLAN - ELECTRICAL ROOM C210
SCALE: 1/4" = 1'-0"

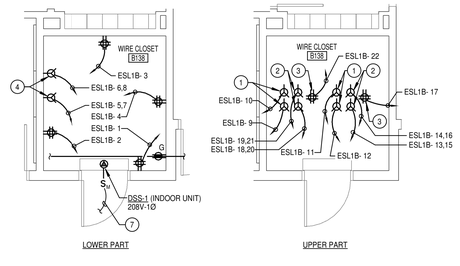

5 E-4.1 PART FLOOR PLAN - WIRE CLOSET B138
SCALE: 1/4" = 1'-0"

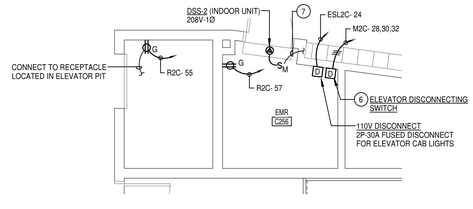

6 E-4.1 PART PLAN - EMR C256
SCALE: 1/4" = 1'-0"

4 2 0 4 8
SCALE: 1/4" = 1'-0"

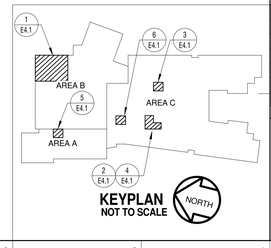

KEYPLAN
NOT TO SCALE

James Posey Associates
Engineering your vision
Mechanical & Electrical Engineers
jamesposey.com
3112 Lord Baltimore Drive
Baltimore, MD 21244
tel 410-265-6100
fax 410-298-9820

Professional Certification. I hereby certify that these documents were prepared or approved by me, and that I am a duly licensed professional engineer under the laws of the state of Maryland. License No. 25431, Expiration date: 02-24-2018.

STATE OF MARYLAND JAMES A. POSEY JR. No. 25431 PROFESSIONAL ENGINEER

JPA PROJECT NO. 5648-15

11720 Baltsville Drive
Suite 600
Calverton, MD 20705
Tel: 301.595.1000
www.grimmandparker.com
G+P GRIMM AND PARKER

GP #21541

PART PLANS

LANSDOWNE ELEMENTARY SCHOOL
2301 ALMA ROAD, BALTIMORE, MD

DATE	DESCRIPTION
10/7/16	ADD NO.1

E-4.1
11/17/16
BID SET

© 2016 James Posey Associates, Inc.

© GRIMM AND PARKER, P.C. 2014

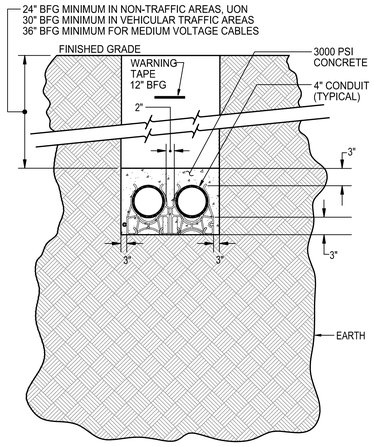

1 / E-5.1 **DETAIL**
2-WAY ELECTRICAL DUCTBANK
NOT TO SCALE

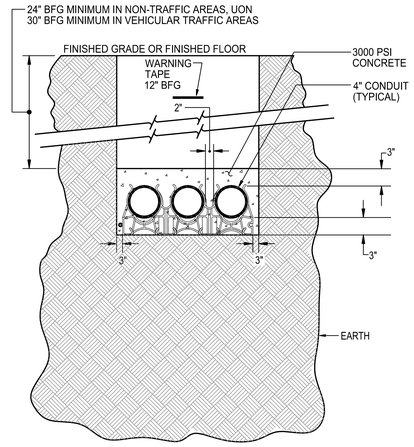

2 / E-5.1 **DETAIL**
3-WAY ELECTRICAL DUCTBANK
NOT TO SCALE

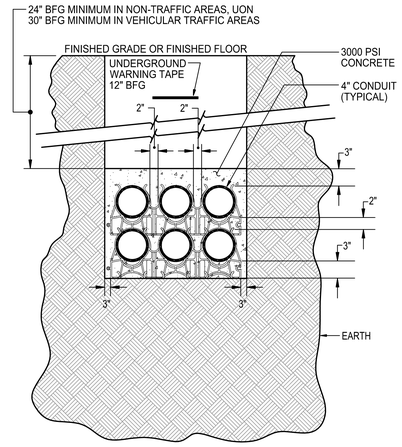

3 / E-5.1 **DETAIL**
6-WAY ELECTRICAL DUCTBANK
NOT TO SCALE

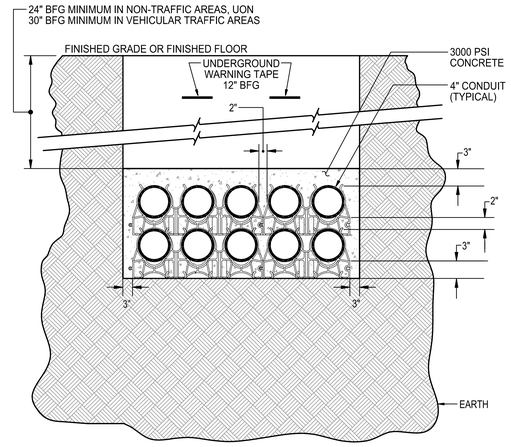

4 / E-5.1 **DETAIL**
10-WAY ELECTRICAL DUCTBANK
NOT TO SCALE

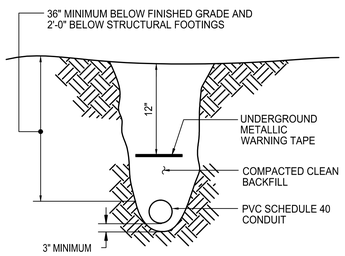

5 / E-5.1 **DETAIL**
DIRECT-BURIED CONDUIT
NOT TO SCALE

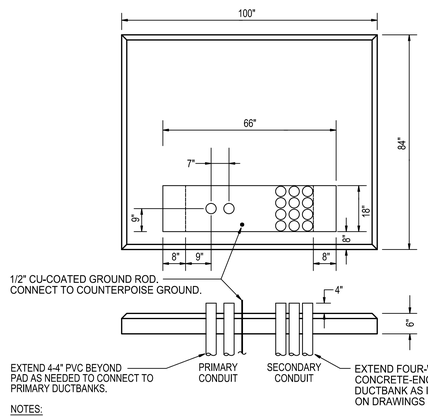

NOTES:

A. SECONDARY CONDUITS SHALL BE CENTERED SYMMETRICALLY WITHIN AREA.

B. PROVIDE COPPER-COATED GROUND ROD. LOCATE AS NEEDED TO AVOID CONDUITS.

6 / E-5.1 **DETAIL**
UTILITY TRANSFORMER FOUNDATION PAD
NOT TO SCALE

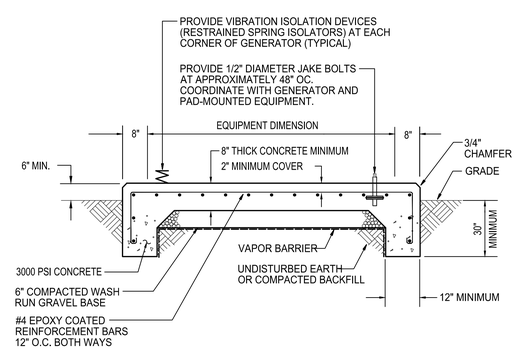

7 / E-5.1 **DETAIL**
GENERATOR CONCRETE PAD
NOT TO SCALE

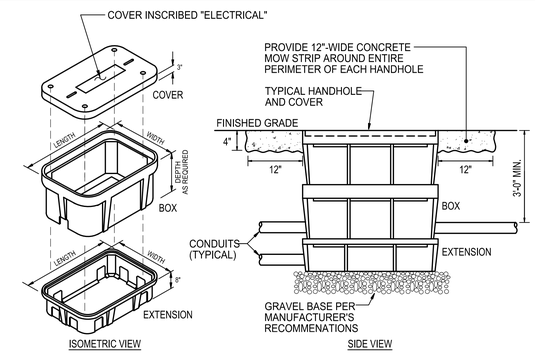

ELECTRICAL HANDHOLE:

PROVIDE PRECAST POLYMER CONCRETE HANDHOLE AND COVER, MINIMUM ANSI/SCTE 77 TIER 15 LOADING, WITH THE FOLLOWING DIMENSIONS:

H HANDHOLE: 13" WIDE x 24" LONG BOX, OPEN BOTTOM.

8 / E-5.1 **DETAIL**
HANHOLE AND HANDHOLE COVER
NOT TO SCALE

NOTES

A. FOUNDATION SHALL BE PLUMB AND POURED ON UNDISTURBED SOIL. CONCRETE SHALL NOT BE POURED BELOW 40°F ON A FALLING TEMPERATURE. CONCRETE SHALL BE ONE CONTINUOUS POUR. MECHANICALLY VIBRATE POURED CONCRETE TO PREVENT VOIDS.

B. EACH POLE BASE SHALL HAVE FOUR 1" CONDUITS WITH TWO CONDUITS TO BE SPARE. UNDERGROUND CONDUITS SHALL BE SCHEDULE 40 PVC.

C. SINCE ANCHOR BOLTS AND BOLT PATTERN TEMPLATE DEPEND ON THE POLE SELECTION, SET AND POUR FOOTINGS AFTER AN APPROVED POLE (AND FIXTURE) ARE SELECTED.

D. FOOTING DIAMETER: 24" MINIMUM.

E. STUB UP (ABOVE TOP OF FOOTING) ANCHOR BOLTS AT LENGTHS SPECIFIED BY POLE MANUFACTURER. COORDINATE SIZES OF ANCHOR BOLTS AND BOLT PATTERNS IN FIELD. PROTECT THREADS BY MEANS OF TAPE OR EQUIVALENT PRIOR TO CONCRETE POUR.

F. USE REINFORCEMENT AS SHOWN ON DETAIL, CHANGES OR SUBSTITUTIONS ARE NOT ACCEPTABLE.

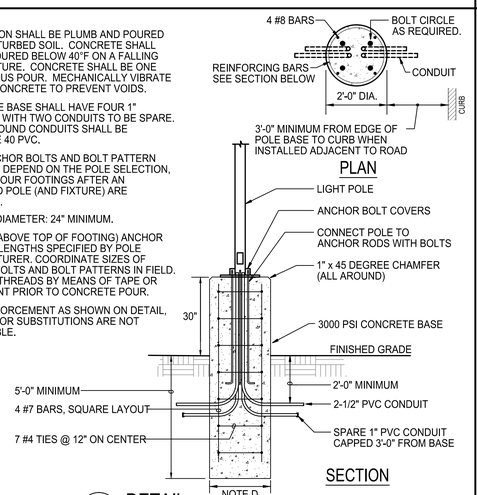

9 / E-5.1 **DETAIL**
CONCRETE POLE BASE
NOT TO SCALE

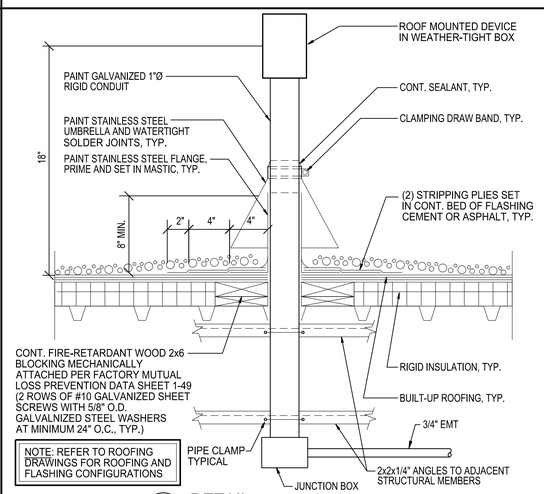

NOTE: REFER TO ROOFING DRAWINGS FOR ROOFING AND FLASHING CONFIGURATIONS

10 / E-5.1 **DETAIL**
DEVICE BOX INSTALLATION OF ROOF
NOT TO SCALE

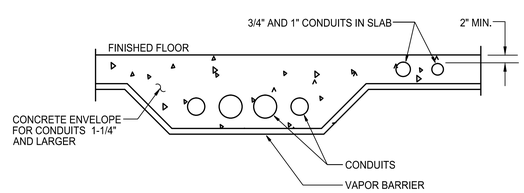

11 / E-5.1 **DETAIL**
CONDUIT IN SLAB ON GRADE FLOOR
NOT TO SCALE

James Posey Associates
Engineering Your Vision
Mechanical & Electrical Engineers
jamesposey.com
3112 Lord Baltimore Drive
Baltimore, MD 21244
tel 410-265-6100
fax 410-298-9820

Professional Certification. I hereby certify that these documents were prepared or approved by me, and that I am a duly licensed professional engineer under the laws of the State of Maryland. License No. 24861, Expiration Date: 02-24-2018.

JPA PROJECT NO. 6542-15

GRIMM AND PARKER
11720 Beltsville Drive
Suite 600
Calverton, MD 20705
Tel: 301.595.1000
www.grimmandparker.com

GP #21541

DETAILS

LANSDOWNE ELEMENTARY SCHOOL
2301 ALMA ROAD, BALTIMORE, MD

DATE	DESCRIPTION

E-5.1
11/17/16
BID SET

November 10, 2016 11:09 a.m.
Drawing: Y:\6542-15\5-DRAWINGS\6542-5.1.DWG JEWES

© 2016 James Posey Associates, Inc.

© GRIMM AND PARKER, P.C. 2014

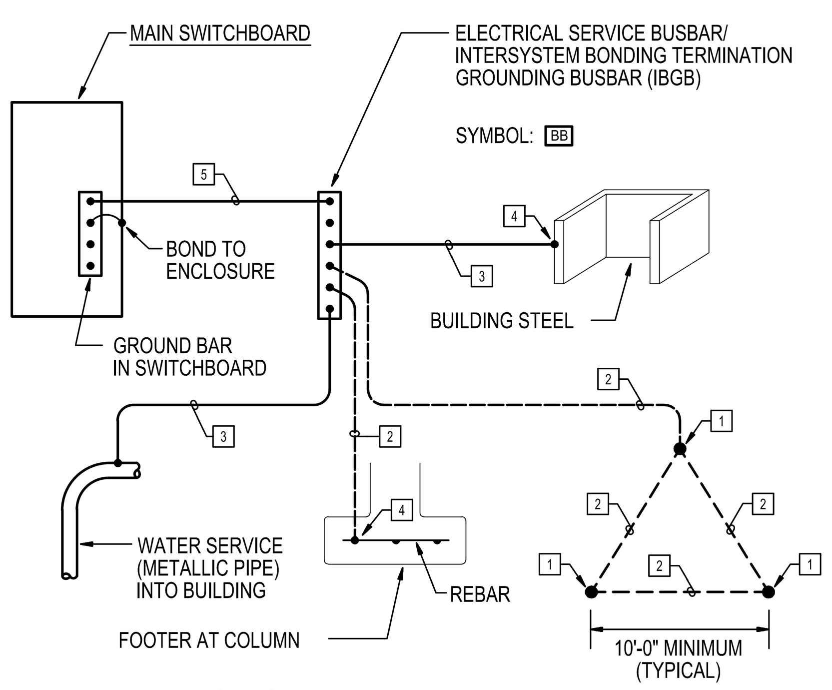

DETAIL NOTES:

1. 3/4" DIAMETER BY 10 FEET LONG COPPER BONDED STEEL GROUND ROD. BOND CONNECTIONS WITH EXOTHERMIC WELD.
2. #4/0 BARE COPPER GROUNDING CONDUCTOR. BOND CONNECTIONS WITH EXOTHERMIC WELD.
3. #4/0 INSULATED COPPER GROUNDING CONDUCTOR IN 1-1/4" CONDUIT.
4. BOND CONNECTIONS WITH EXOTHERMIC WELD.
5. PROVIDE #4/0 INSULATED COPPER GROUNDING CONDUCTOR IN 1-1/4" CONDUIT.

1 E-5.2 DETAIL
SERVICE GROUNDING
NOT TO SCALE

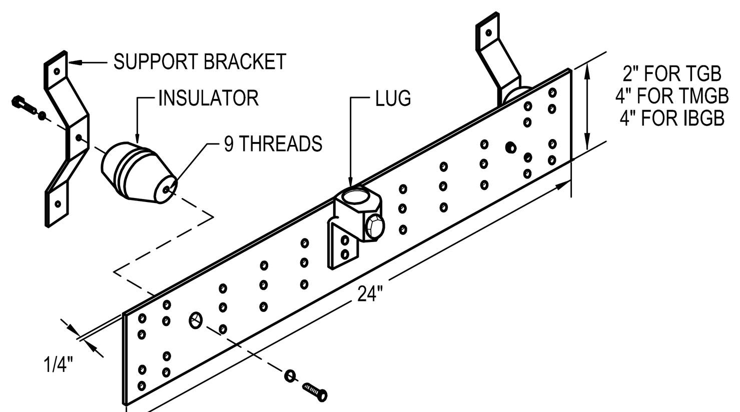

BUSBAR DETAIL NOTES:

1. TELECOMMUNICATIONS GROUNDING BUSBAR (TGB) SHALL BE HARGER BICSI PATTERN TGB KIT, PART NO. TGBI14224TGBKT, OR APPROVED EQUAL. ALL CONNECTIONS TO TGB SHALL BE EXOTHERMIC WELD OR 2-LUG CONNECTOR.
2. INTERSYSTEM BONDING TERMINATION GROUNDING BUSBAR (IBGB) AND TELECOMMUNICATIONS MAIN GROUNDING BUSBAR (TMGB) SHALL BE HARGER BICSI PATTERN TGB KIT, PART NO. TGBI14424TMGBKT, OR APPROVED EQUAL. ALL CONNECTIONS TO TMGB SHALL BE EXOTHERMIC WELD OR 2-LUG CONNECTOR.
3. PROVIDE #4/0 GROUND AND CONNECT TO STRUCTURAL BUILDING STEEL.

SYMBOL: BB

2 E-5.2 DETAIL
GROUNDING BUSBAR ASSEMBLY
NOT TO SCALE

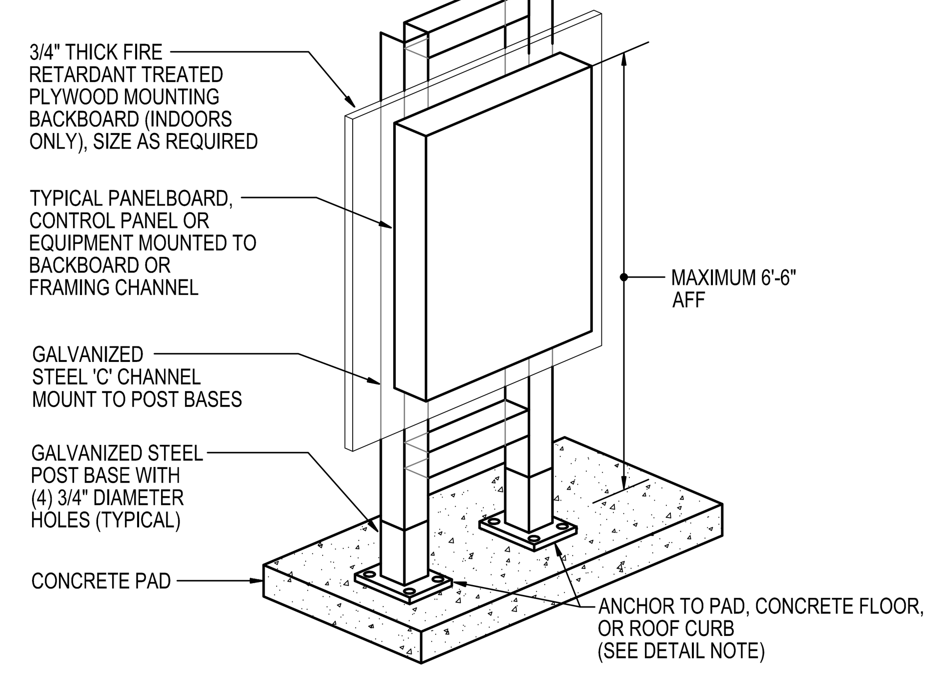

DETAIL NOTE: 1/2" DIAMETER GALVANIZED STEEL ALL-THREAD ADHESIVE ANCHOR WITH GALVANIZED STEEL FLAT WASHER, LOCK WASHER AND HEXAGON NUT; EMBEDMENT TO BE 4" MINIMUM (TYPICAL OF 4 PER BASE). CHANNEL, POST BASES, AND HARDWARE SHALL BE CORROSION-RESISTANT.

3 E-5.2 DETAIL
FREESTANDING SUPPORTS
NOT TO SCALE

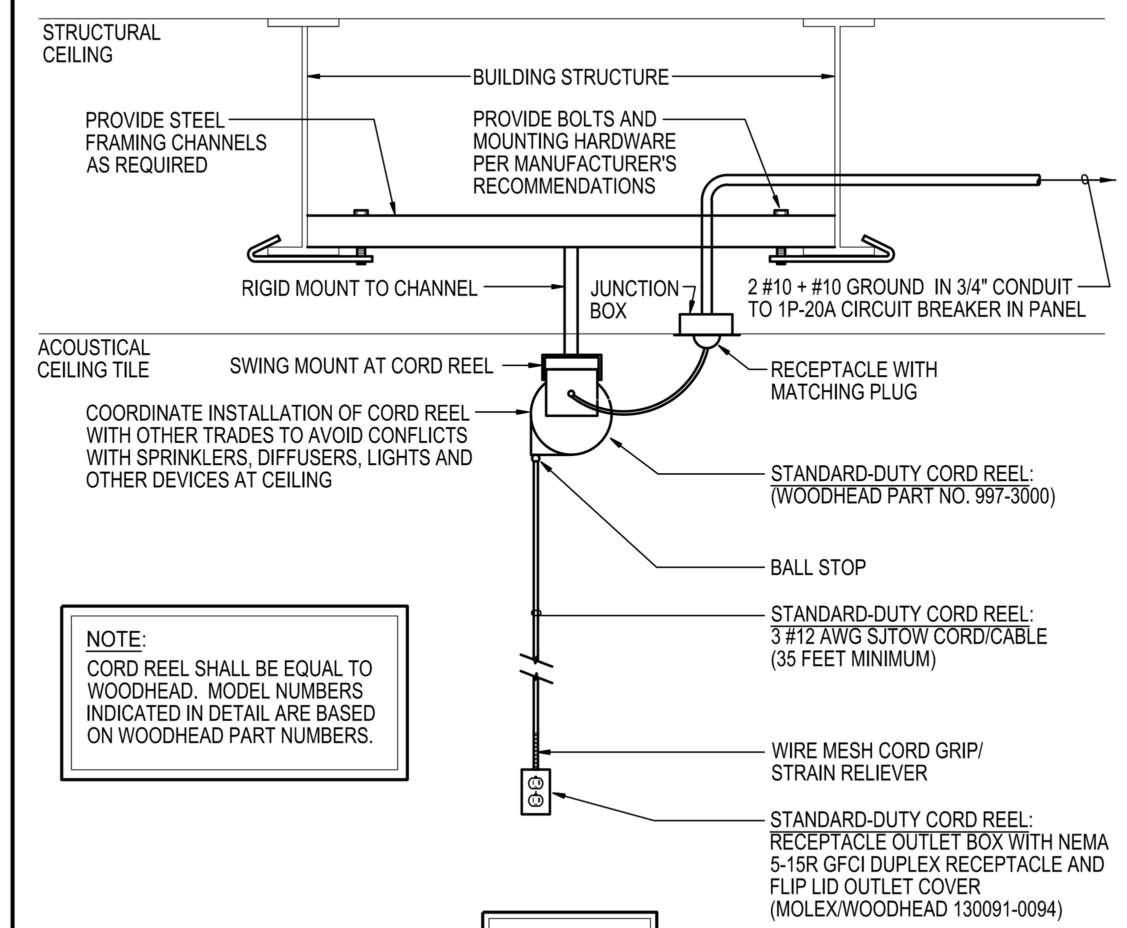

NOTE:
CORD REEL SHALL BE EQUAL TO WOODHEAD. MODEL NUMBERS INDICATED IN DETAIL ARE BASED ON WOODHEAD PART NUMBERS.

SYMBOL:

4 E-5.2 DETAIL
OVERHEAD POWER CORD REEL
NOT TO SCALE

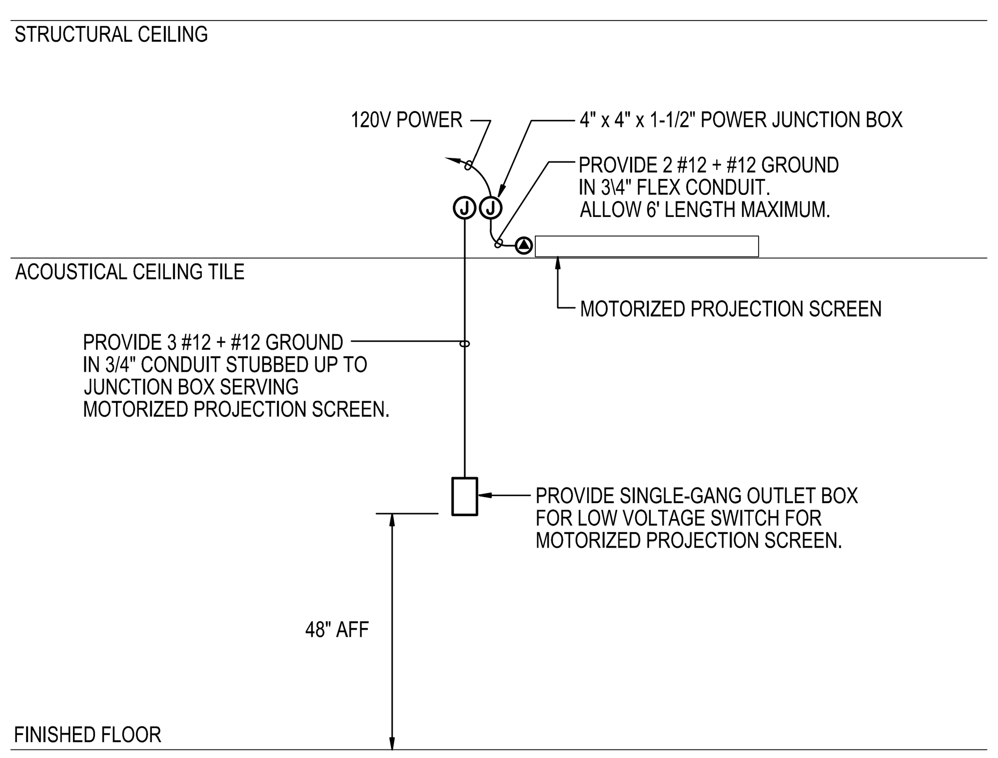

5 E-5.2 DETAIL
MOTORIZED PROJECTOR SCREEN
NOT TO SCALE

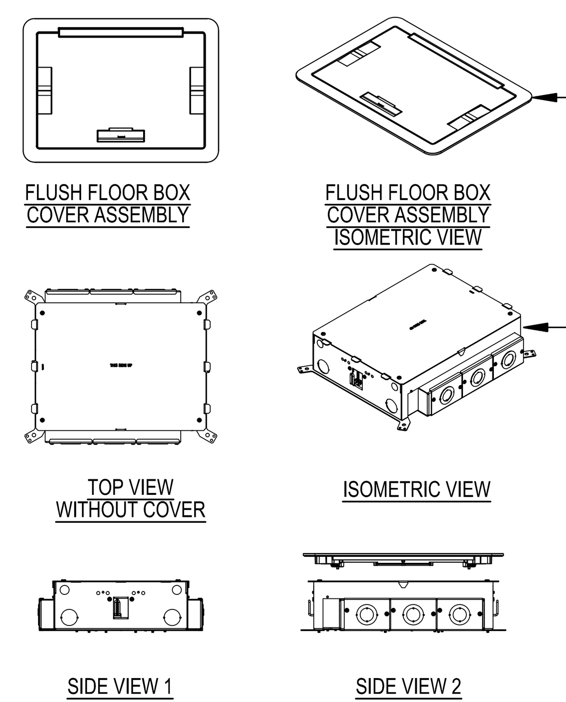

PROVIDE WIREMOLD EFB610BT FLUSH STYLE COVER ASSEMBLY WITH SOLID LID. COVER FINISH TO BE SELECTED BY ARCHITECT. FOR TILE FLOORS, UTILIZE WIREMOLD EFB610-TS TILE SHIM KIT WHERE REQUIRED.

PROVIDE WIREMOLD EFB6S-0G (ON GRADE) FLOOR BOX ASSEMBLY AND THE FOLLOWING:
- (2) NEMA 5-20R RECEPTACLES
- (4) EFB-B BLANK DEVICE PLATES
- (1) EFB610-CTR TRIM RING TO BE INSTALLED PRIOR TO POURING CONCRETE

NOTE:
A. FLOOR BOX DEVICE ASSEMBLIES SHALL BE FULLY RECESSED IN CONCRETE FLOOR SLAB FOR CARPET AND TILE APPLICATIONS. COVERS SHALL BE FLUSH MOUNTED IN FINISHED FLOOR.

SYMBOL: FB

6 E-5.2 DETAIL
FLOOR BOX FOR POWER AND COMMUNICATIONS
NOT TO SCALE

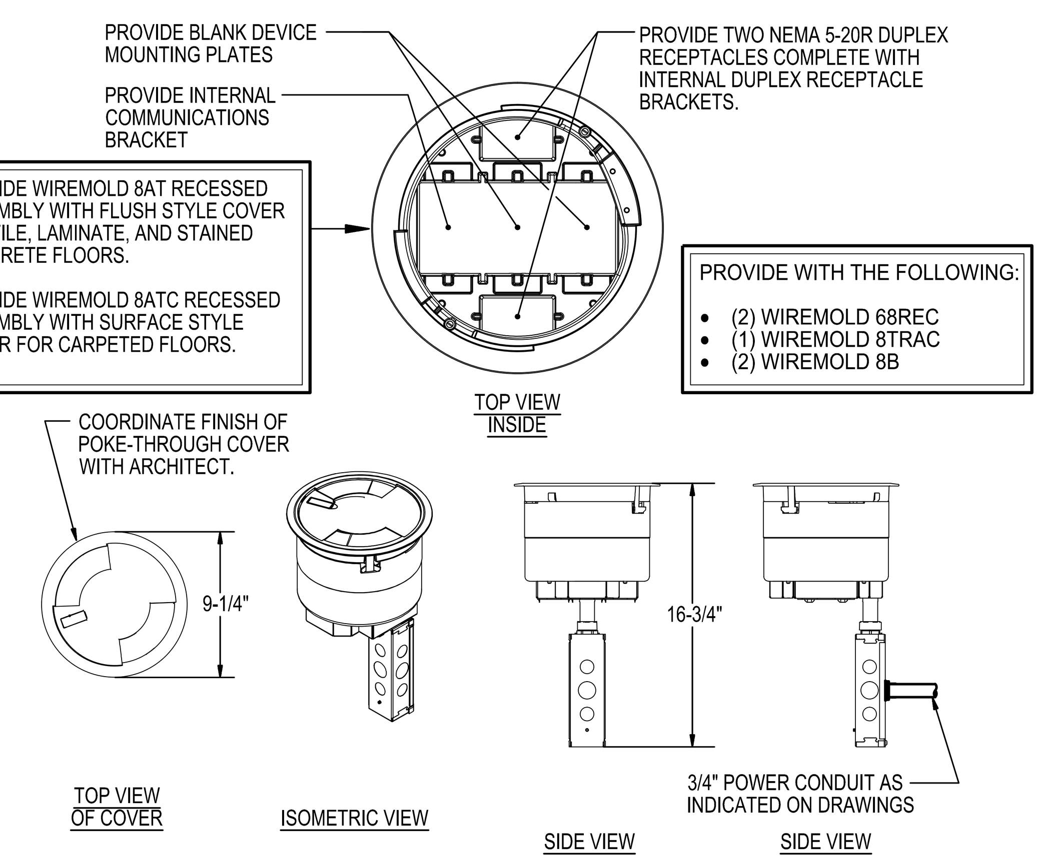

PROVIDE WIREMOLD 8AT RECESSED ASSEMBLY WITH FLUSH STYLE COVER FOR TILE, LAMINATE, AND STAINED CONCRETE FLOORS.

PROVIDE WIREMOLD 8ATC RECESSED ASSEMBLY WITH SURFACE STYLE COVER FOR CARPETED FLOORS.

PROVIDE WITH THE FOLLOWING:
- (2) WIREMOLD 68REC
- (1) WIREMOLD 8TRAC
- (2) WIREMOLD 8B

SYMBOL:

7 E-5.2 DETAIL
POKE-THROUGH FOR POWER AND COMMUNICATIONS
NOT TO SCALE

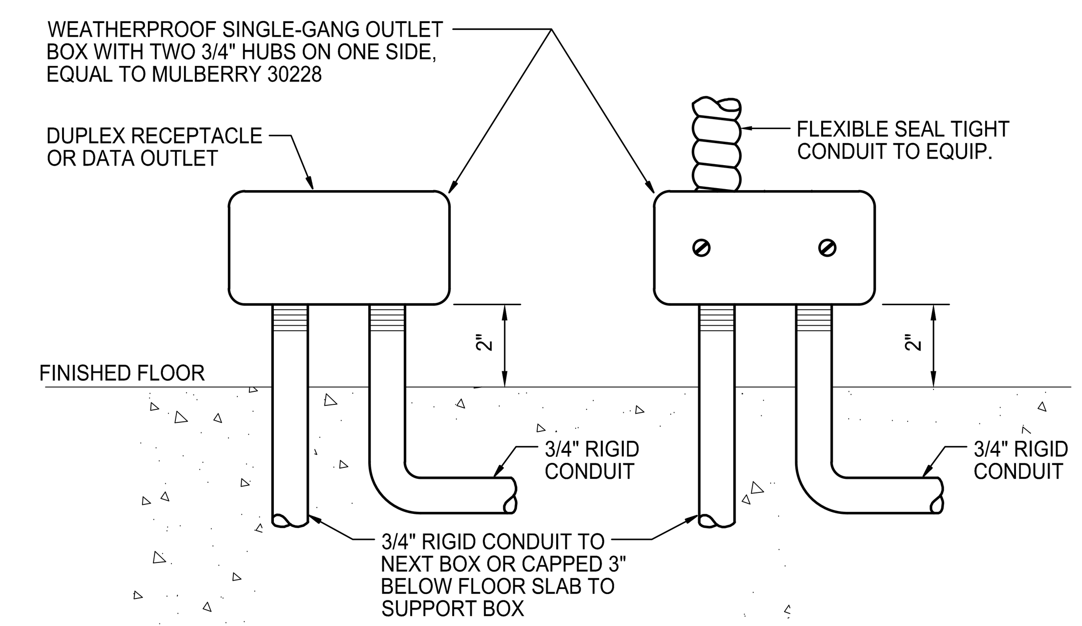

8 E-5.2 DETAIL
FLOOR OUTLET
NOT TO SCALE

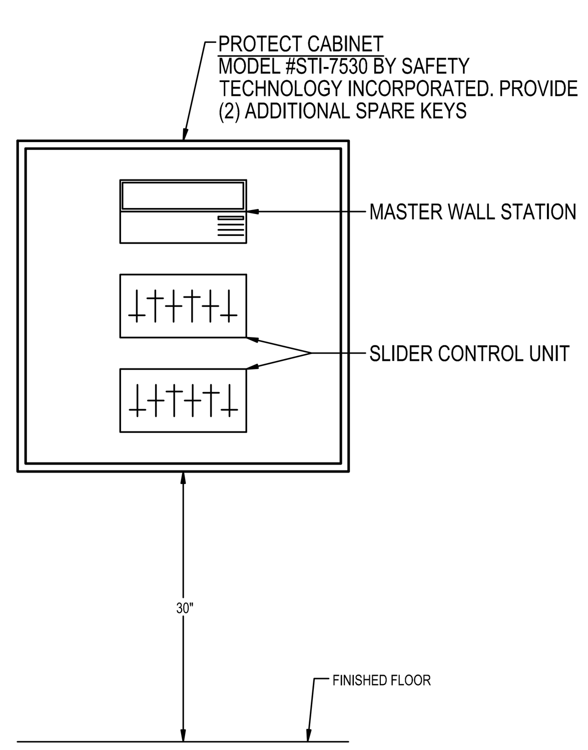

9 E-5.2 ELEVATION
CENTRAL DIMMING CONTROL STATION
NOT TO SCALE

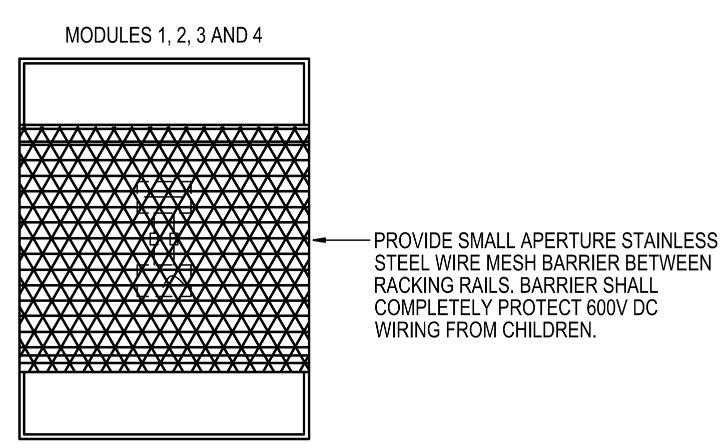

10 E-5.2 DETAIL
600V DC WIRE PROTECTION
NOT TO SCALE

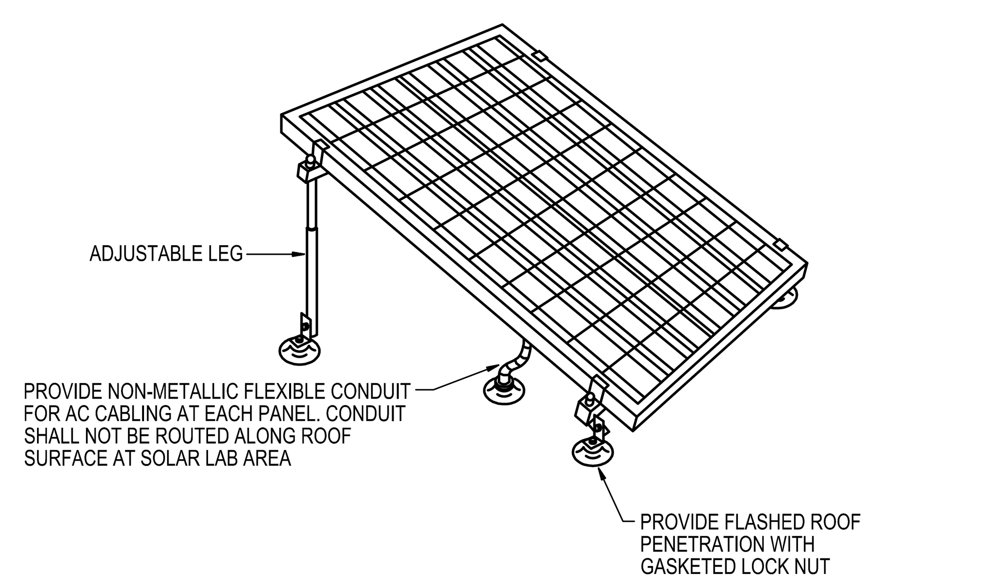

GENERAL NOTE:
ADJUSTABLE TILT RACKING SYSTEM SHALL BE ORION MARS OR EQUAL WITH THE FOLLOWING FEATURES:
(1) ALUMINUM RAILS, CLAMPS AND LEGS WITH STAINLESS STEEL FASTENING HARDWARE.
(2) ROOF PENETRATING MOUNTING FEET.
(3) FIELD ADJUSTABLE TILT ANGLE FROM 15-45 DEGREES WITH MINIMUM TOOLS.

11 E-5.2 DETAIL
ADJUSTABLE TILT RACKING SYSTEM (MODULES 1, 2 AND 3)
NOT TO SCALE

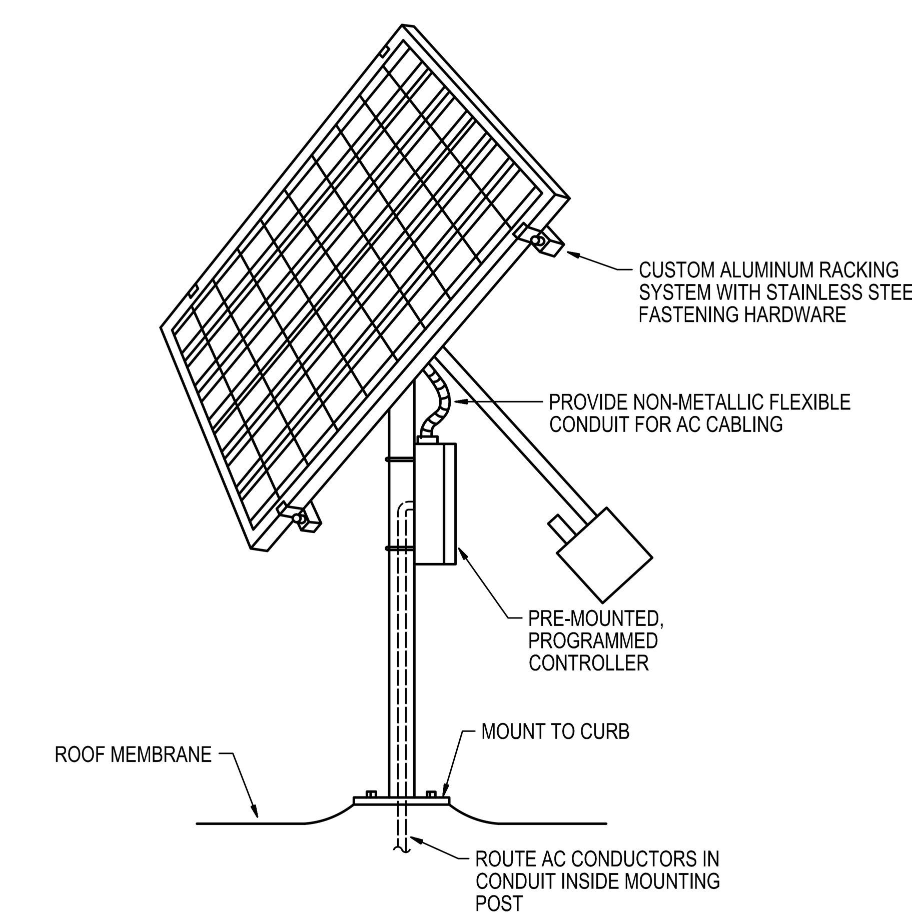

GENERAL NOTE:
DUAL AXIS SOLAR TRACKING SYSTEM SHALL BE ARRAY TECHNOLOGIES OR EQUAL WITH THE FOLLOWING FEATURES:
1) ACCOMMODATE ONLY ONE (1) 60 CELL CRYSTALLINE PV PANEL.
2) ROOF PENETRATING BOLT-ON MOUNTING PLATE.
3) +/- 120° EAST-WEST AND 5-60° NORTH-SOUTH TRACKING RANGE.
4) CORROSION RESISTANT STEEL AND ANODIZED ALUMINUM CONSTRUCTION.
5) 24VDC GEAR DRIVE/LINEAR ACTUATOR WITH NIGHT TIME RETURN.
6) CLOSED LOOP OPTICAL SOLAR TRACKING CONTROLLER WITH +/- 2" ACCURACY.

12 E-5.2 DETAIL
DUAL AXIS SOLAR TRACKET (MODULE 4)
NOT TO SCALE

James Posey Associates
Engineering Your Vision
Mechanical & Electrical Engineers
jamesposey.com
tel 410-265-6100
fax 410-298-9820
3112 Lord Baltimore Drive
Baltimore, MD 21244

Professional Certification. I hereby certify that these documents were prepared or approved by me, and that I am a duly licensed professional engineer under the laws of the State of Maryland, License No. 24861, Expiration date: 02-24-2018.

JPA PROJECT NO. 6542-15

11720 Beltsville Drive
Suite 600
Calverton, MD 20705
Tel: 301.595.1000
www.grimmandparker.com
G+P GRIMM AND PARKER

GP #21541

DETAILS
LANSDOWNE ELEMENTARY SCHOOL
2301 ALMA ROAD, BALTIMORE, MD

DATE	DESCRIPTION

E-5.2
11/17/16
BID SET

© 2016 James Posey Associates, Inc.

November 10, 2016 11:09 a.m.

© GRIMM AND PARKER, P.C. 2014

	ACTUATE ALARM SIGNAL	ACTUATE AUDIBLE ALARM SIGNAL	ACTUATE TROUBLE SIGNAL	ACTUATE AUDIBLE TROUBLE SIGNAL	ACTUATE SUPERVISORY SIGNAL	ACTUATE AUDIBLE SUPERVISORY SIGNAL	DISPLAY HORNS/BEAMS ZONE INDICATOR	ACTUATE EVACUATION SIGNALS	TRANSMIT ALARM SIGNAL TO ANNUNCIATOR	TRANSMIT TROUBLE SIGNAL TO ANNUNCIATOR	TRANSMIT SUPERVISORY SIGNAL TO ANNUNCIATOR	RELEASE MAGNETICALLY HELD DOORS	RECALL ELEVATORS TO PRIMARY RECALL FLOOR	RECALL ELEVATORS TO ALTERNATE RECALL FLOOR	SEND SIGNAL TO SECURITY PANEL	ELEVATOR SHUT DOWN	AHU LOCAL SHUTDOWN	EMERGENCY LIGHTING OVERRIDE
MANUAL ALARM PULLBOX LOWER FLOOR	•	•					•	•	•			•	•			•		•
MANUAL ALARM PULLBOX FIRST FLOOR	•	•					•	•	•			•	•			•		•
MANUAL ALARM PULLBOX SECOND FLOOR	•	•					•	•	•			•	•			•		•
SMOKE DETECTOR FIRST FLOOR	•	•					•	•	•			•	•					•
SMOKE DETECTOR SECOND FLOOR	•	•					•	•	•			•	•					•
DUCT TYPE SMOKE DETECTOR ANY FLOOR																	•	
SPRINKLER VALVE MONITORS ANY FLOOR					•	•	•				•							
SPRINKLER FLOW SWITCHES ANY FLOOR	•	•					•	•	•			•	•			•		
ELEVATOR LOBBY SMOKE DETECTOR	•	•					•	•	•			•	•					
ELEVATOR LOBBY ALTERNATE LEVELS SMOKE DETECTOR	•	•					•	•	•			•	•	•				
ELEVATOR MACHINE ROOM SMOKE DETECTOR	•	•					•	•	•			•	•	•				
ELEVATOR MACHINE ROOM HEAT DETECTOR	•	•					•	•	•			•	•			•		
FIRE ALARM AC POWER FAILURE					•	•					•							
FIRE ALARM SYSTEM LOW BATTERY			•	•						•								
OPEN CIRCUIT			•	•						•								
GROUND FAULT			•	•						•								
NOTIFICATION APPLIANCE SHORT CIRCUIT			•	•						•								

4 / E-5.3 **FIRE ALARM MATRIX**
NO SCALE

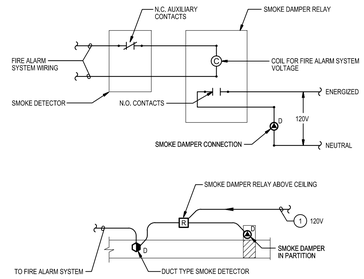

SPECIFIC NOTE:

1. OPERATION: PROVIDE 120-VOLT POWER CIRCUIT THROUGH RELAY CONTROLLED BY SMOKE DETECTOR'S NORMALLY CLOSED CONTACTS. SMOKE DETECTOR GOES INTO ALARM - CONTACTS OPEN - DAMPER CLOSES ON LOSS OF POWER. SMOKE DETECTOR IS RESET AT FACP AND DAMPER OPENS (POWER ON).

3 / E-5.3 **DIAGRAM**
SMOKE DETECTOR AT SMOKE DAMPER
NOT TO SCALE

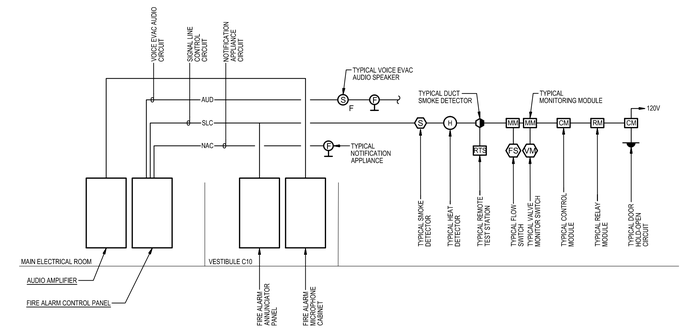

SYSTEM COMPONENTS SHOWN ARE TYPICAL. REFER TO FLOOR PLANS FOR EXACT QUANTITIES AND LOCATIONS.

2 / E-5.3 **DIAGRAM**
FIRE ALARM RISER
NOT TO SCALE

RED LED — MANUAL PULL STATION
RED LED — AREA SMOKE DETECTOR
AMBER LED — DUCT TYPE SMOKE DETECTOR
RED LED — SPRINKLER FLOW SWITCH
AMBER LED — SPRINKLER VALVE TAMPER SWITCH
AMBER LED — MAIN VALVE TAMPER SWITCH
AMBER LED — GENERATOR FAILURE
RED LED — GENERATOR RUNNING
RED LED — HEAT DETECTOR (ELEVATOR)
RED LED — SPARE
RED LED — SPARE

AMBER LED — SUPERVISORY
RED LED — ALARM
AMBER LED — TROUBLE
GREEN LED — POWER ON

ALARM — SILENT — LAMP TEST — EMERGENCY FAN DISCONNECT SWITCH

NORTH

Lansdowne Elementary School
2301 Alma Road
Baltimore, Maryland 21227

1 / E-5.3 **DETAIL**
FIRE ALARM ANNUNCIATOR PANEL
NOT TO SCALE

James Posey Associates
Engineering Your Vision
Mechanical & Electrical Engineers
jamesposey.com
3112 Lord Baltimore Drive
Baltimore, MD 21244
tel 410-265-6100
fax 410-298-9820

Professional Certification. I hereby certify that these documents were prepared or approved by me, and that I am a duly licensed professional engineer under the laws of the State of Maryland. License No. 24861. Expiration Date: 02-24-2018.

JPA PROJECT NO. 6542-15

11720 Beltsville Drive
Suite 600
Calverton, MD 20705
Tel: 301.595.1000
www.grimmandparker.com
GRIMM AND PARKER

GP #21541

DETAILS
LANSDOWNE ELEMENTARY SCHOOL
2301 ALMA ROAD, BALTIMORE, MD

DATE	DESCRIPTION

E-5.3
11/17/16
BID SET

November 10, 2016 11:09 a.m.
Drawing: \\6542-15\G-DRAWINGS\6542-5.3.DWG JE NAVIS

© 2016 James Posey Associates, Inc.

© GRIMM AND PARKER, P.C. 2014

SCHEDULE OF DIMMER PANEL DP

120/208 VOLTS 3 PHASE 4 WIRE 100 AMPS MCB SURFACE MOUNTED

DIMMER CIRCUIT NO	LOCATION	DESCRIPTION	CONTROL ZONE	DIMMER/ SWITCH	LOAD TYPE	DIMMER CAPACITY (WATTS)	CIRCUIT LOAD (WATTS)	NOTES
1	PLATFORM	STAGE LEFT CONNECTION STRIP	1	DIMMER	HALOGEN	1440	300	1
2	PLATFORM	STAGE LEFT CONNECTION STRIP	1	DIMMER	HALOGEN	1440	300	1
3	PLATFORM	STAGE LEFT CONNECTION STRIP	1	DIMMER	HALOGEN	1440	300	1
4	PLATFORM	STAGE LEFT CONNECTION STRIP	1	DIMMER	HALOGEN	1440	300	1
5	PLATFORM	STAGE RIGHT CONNECTION STRIP	2	DIMMER	HALOGEN	1440	300	1
6	PLATFORM	STAGE RIGHT CONNECTION STRIP	2	DIMMER	HALOGEN	1440	300	1
7	PLATFORM	STAGE RIGHT CONNECTION STRIP	2	DIMMER	HALOGEN	1440	300	1
8	PLATFORM	STAGE RIGHT CONNECTION STRIP	2	DIMMER	HALOGEN	1440	300	1
9	PLATFORM	STAGE FRONT CONNECTION STRIP	3	DIMMER	HALOGEN	1440	300	1
10	PLATFORM	STAGE FRONT CONNECTION STRIP	3	DIMMER	HALOGEN	1440	300	1
11	PLATFORM	STAGE FRONT CONNECTION STRIP	3	DIMMER	HALOGEN	1440	300	1
12	----	SPARE	--	--	--	--	--	--

SPECIFIC NOTES:
1. PROVIDE 1P-20A CIRCUIT BREAKER AS BRANCH CIRCUIT OVERCURRENT PROTECTION

CONNECTED LOAD = 3.3 KVA
DEMAND LOAD = 3.3 KVA
MIN A/C RATING = 10,000 AMPS SYM
LOCATION PLATFORM B127

SCHEDULE OF TRANSFORMERS

TRANSFORMER DESIG.	KVA	LOCATION	PRIMARY FEEDER	SECONDARY TAP WIRING & CONDUIT (NOTE A)	GROUNDING ELECTRODE CONDUCTOR	EQUIPMENT SERVED	NOTES
TC1B	30	ELEC (B111)	SB-1	3#2 + #2/0N + #8G - 1 1/2"C	#8	PANEL C1B	1, 2, 4
TC1C	45	ELEC (C104)	L1C-26	5#2/0 + #4G - 2"C	#4	PANEL C1C	1, 2, 4
TC2C	45	ELEC (C210)	L2C-38	5#2/0 + #4G - 2"C	#4	PANEL C2C	1, 2, 4
TELL1B	15	AUX. ELEC (B111A)	ELH1B-20	4#8 + #8G - 1"C	#8	PANEL ELL1B	1, 2, 3
TESL1B	75	AUX. ELEC (B111A)	ESH1B-2	4#250 + #2G - 3"C	#2	PANEL ESL1B	1, 2, 3
TR1C	45	ELEC (C104)	L1C-25	4#1/0 + #6G - 2"C	#6	PANEL R1C	1, 2, 3
TR2C	75	ELEC (C210)	L2C-37	4#4/0 + #2G - 2-1/2"C	#2	PANEL R2C	1, 2, 3
TRD1	150	ELEC (B111)	SB-2	2 SETS: (4 #250 + #1/0G - 3"C)	#1/0	PANEL RD1	1, 2, 3

TRANSFORMER GENERAL NOTES:

A. TRANSFORMER SECONDARY TAP: CONDUCTORS INDICATED REFLECT PHASE, NEUTRAL (IN WYE-CONFIGURATION), AND SUPPLY-SIDE BONDING JUMPER (SSBJ) IN ACCORDANCE WITH NEC ARTICLES 450, 240.21, AND 250.30.

B. TRANSFORMER SHALL HAVE 480-VOLT, 3-PHASE, DELTA PRIMARY AND 120/208-VOLT, 3-PHASE, WYE SECONDARY.

TRANSFORMER SPECIFIC NOTES:
1. PROTECT GROUNDING ELECTRODE CONDUCTOR WITH 1" EMT WITH GROUNDING BUSHINGS AT EACH END.
2. FLOOR MOUNT: PROVIDE 4" HIGH HOUSEKEEPING PAD.
3. GENERAL PURPOSE TYPE: STANDARD DOE 2016 ENERGY EFFICIENT TRANSFORMER.
4. K-13 RATED TYPE. TRANSFORMER SHALL HAVE PROVISIONS TO TERMINATE TWO NEUTRAL CONDUCTORS.

VARIABLE FREQUENCY DRIVE SCHEDULE

DESIG	MOTOR HP	MOTOR VOLTAGE / PHASE	EQUIPMENT SERVING	NOTES
VFD-1	30	480V-3Ø	GEOTHERMAL LOOP PUMP (P-1)	1
VFD-2	30	480V-3Ø	GEOTHERMAL LOOP PUMP (P-2)	1

NOTE:
1. PROVIDE UNIT WITHOUT BY-PASS OPTION.

GENERAL NOTES:

A. INFORMATION SHOWN ON THIS DRAWING PERTAINING TO EXISTING CONDITIONS HAS BEEN OBTAINED FROM AVAILABLE BUILDING DRAWINGS OR GENERAL FIELD OBSERVATIONS AND MAY NOT INDICATE EXISTING CONDITIONS IN DETAIL OR DIMENSION. DETERMINE EXISTING CONDITIONS PRIOR TO FABRICATION OR PERFORMANCE OF ANY WORK. SHOULD CONDITIONS BE DISCOVERED THAT PREVENT EXECUTION OF THE WORK AS INDICATED, IMMEDIATELY NOTIFY THE ARCHITECT IN WRITING AND AWAIT DIRECTION BEFORE PROCEEDING WITH THE WORK.

SPECIFIC NOTES:

1. PROVIDE TWO-WAY CONCRETE ENCASED DUCTBANK FOR BGE PRIMARY SERVICE CABLES. REFER TO DETAIL 1/E-5.1 FOR TWO-WAY DUCTBANK. REFER TO ELECTRICAL SITE PLAN ON DRAWING ME-0.1 FOR DUCTBANK ROUTING AND ADDITIONAL INFORMATION.
2. COORDINATE WITH BGE FOR INSTALLATION OF PRIMARY SERVICE FEEDERS, UTILITY TRANSFORMER, TRANSFORMER PAD, UTILITY METER, AND SECONDARY SERVICE FEEDERS.
3. PROVIDE TRANSFORMER PAD. REFER TO DETAIL 6/E-5.1. COORDINATE WITH BGE FOR REQUIREMENTS.
4. REFER TO DETAIL 4/E-5.1 FOR SECONDARY SERVICE DUCTBANK.
5. PROVIDE PIT (TROUGH) UNDER C/T SECTION OF SWITCHBOARD, 2 FEET DEEP AND MEASURE 1" LESS THAN THE WIDTH AND DEPTH OF THE CT SECTION OF SWITCHBOARD SB. PER BGE REQUIREMENTS.
6. PROVIDE 4" HIGH CONCRETE HOUSEKEEPING PAD.
7. REFER TO DETAIL 1/E-5.2 FOR GROUNDING CONNECTIONS AT SWITCHBOARD.
8. REFER TO SCHEDULE OF TRANSFORMERS ON THIS DRAWING FOR NUMBER AND SIZE OF WIRE AND CONDUIT OF PRIMARY AND SECONDARY FEEDERS FOR TRANSFORMER AS NOTED. PROVIDE TRANSFORMER ON 4" HIGH CONCRETE HOUSEKEEPING PAD.
9. PROVIDE TYPE 10 GENERATOR, PER NFPA 110. THE GENERATOR SHALL BE ABLE TO PROVIDE GENERATOR POWER TO THE SCHOOL WITHIN 10-SECONDS AFTER A UTILITY POWER OUTAGE (TYPE 10).
10. PROVIDE GENERATOR CONTROL WIRING IN CONDUIT BETWEEN GENERATOR CONTROL PANEL AND ASSOCIATED AUTOMATIC TRANSFER SWITCHES. REFER TO DRAWING ME-0.1. GENERATOR CONTROL WIRING SHALL BE AS PER GENERATOR MANUFACTURER'S RECOMMENDATIONS.
11. PROVIDE WIRING IN CONDUIT FROM GENERATOR CONTROL PANEL TO GENERATOR REMOTE ALARM ANNUNCIATOR PANEL. REFER TO DRAWING ME-0.1. LOCATE GENERATOR REMOTE ALARM ANNUNCIATOR PANEL IN BUILDING SERVICES OFFICE B108.
12. PROVIDE GENERATOR CONCRETE PAD. REFER TO DETAIL 7/E-5.1.
13. REFER TO DETAIL 3/E-5.1 FOR GENERATOR DUCTBANK. PROVIDE 4 #2 + #6 GROUND IN DUCTBANK FOR LIFE SAFETY POWER FEEDER. PROVIDE 4 #1/0 + #6 GROUND IN DUCTBANK FOR STAND-BY POWER FEEDER.
14. PROVIDE 3P-100A-480V (250A FRAME) ELECTRONIC TRIP CIRCUIT BREAKER TO SERVE GENERATOR LIFE SAFETY LOADS. MOUNT CIRCUIT BREAKER WITHIN GENERATOR ENCLOSURE AND MAKE CONNECTIONS. COORDINATE LOCATION OF CIRCUIT BREAKER WITH GENERATOR MANUFACTURER.
15. PROVIDE 3P-150A-480V (250A FRAME) CIRCUIT BREAKER TO SERVE GENERATOR STANDBY LOADS. MOUNT CIRCUIT BREAKER WITHIN GENERATOR ENCLOSURE AND MAKE CONNECTIONS. COORDINATE LOCATION OF CIRCUIT BREAKER WITH GENERATOR MANUFACTURER.
16. PROVIDE 3P-100A NFSS TO SERVE GENERATOR LIFE SAFETY LOADS.
17. PROVIDE 3P-200A NFSS TO SERVE GENERATOR STANDBY LOADS.
18. PROVIDE 3P-100A FSS TO SERVE GENERATOR LIFE SAFETY LOADS, WITH 100A CURRENT-LIMITING FUSES.
19. PROVIDE 3P-200A FSS TO SERVE GENERATOR STANDBY LOADS, WITH 150A CURRENT-LIMITING FUSES.
20. PROVIDE 4P-125A AUTOMATIC TRANSFER SWITCH (ATS) TO SERVE LIFE SAFETY LOADS. ATS SHALL HAVE A MINIMUM UL 1008 WITHSTAND AND CLOSING RATING OF 65KAIC. LABEL "ATS-EL - LIFE SAFETY".
21. PROVIDE 4P-150A AUTOMATIC TRANSFER SWITCH (ATS) TO SERVE STAND-BY LOADS. ATS SHALL HAVE A MINIMUM UL 1008 WITHSTAND AND CLOSING RATING OF 65KAIC. LABEL "ATS-ES - STANDBY"
22. PROVIDE GENERATOR DOCKING STATION IN NEMA TYPE 3R ENCLOSURE FOR CONNECTIONS TO PORTABLE MOBILE GENERATOR. PROVIDE SIGN ON FRONT OF GENERATOR DOCKING STATION TO READ AS FOLLOWS: "SERVING SWITCHBOARD IN MAIN ELECTRICAL ROOM, 277/480V, 3-PHASE, 4-WIRE."
23. PROVIDE SIX SETS: (5 #400 + #3/0 GROUND) IN DUCTBANK. REFER TO DETAIL 3/E-5.1 FOR DUCTBANK.
24. KEY INTERLOCK MAIN CIRCUIT BREAKERS IN SWITCHBOARD SB SUCH THAT ONLY ONE MAIN CIRCUIT BREAKER IS IN THE "CLOSED" POSITION AT A TIME.

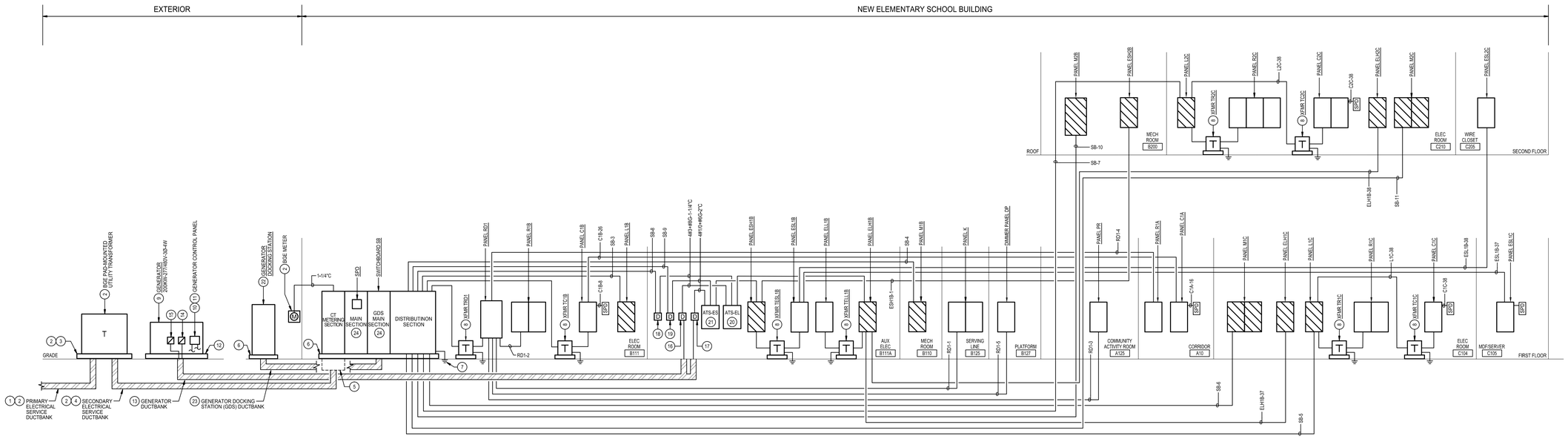

1 / E-6.1 DIAGRAM
POWER DISTRIBUTION RISER
NOT TO SCALE

James Posey Associates
Engineering Your Vision
Mechanical & Electrical Engineers
jamesposey.com
3112 Lord Baltimore Drive
Baltimore, MD 21244
tel 410-265-6100
fax 410-298-9820

Professional Certification. I hereby certify that these documents were prepared or approved by me, and that I am a duly licensed professional engineer under the laws of the State of Maryland. License No. 24861. Expiration Date: 02-24-2018.

JPA PROJECT NO. 6542-15

GRIMM AND PARKER
11720 Beltsville Drive
Suite 600
Calverton, MD 20705
Tel: 301.595.1000
www.grimmandparker.com

GP #21541

DIAGRAMS

LANSDOWNE ELEMENTARY SCHOOL
2301 ALMA ROAD, BALTIMORE, MD

DATE	DESCRIPTION

E-6.1
11/17/16
BID SET

November 10, 2016 11:09 a.m.
Drawing: I:\6542-15\5-DRAWINGS\6542E-E-1.DWG JEANES

© 2016 James Posey Associates, Inc.

© GRIMM AND PARKER, P.C. 2014

WIRING SCHEDULE SWITCHBOARD SB

480/277 VOLTS — 2000 AMP MAIN BUS — FREE STANDING
3 PHASE 4 WIRE — 2000 AMP MAIN BREAKER — 65,000 AIC RATING

FEEDER	EQUIPMENT SERVED	FEEDER SIZE	FRAME	POLE	AMP	A	B	C	NOTES
1	PANEL C1B (VIA XFMR TC1B)	3 #6 + #10G - 1"C	100 A	3	60 A	7.7	8.1	6.4	``
2	PANEL RD1 (VIA XFMR TRD1)	3 #350 + #4G - 3"C	400 A	3	300 A	39.7	41.5	35.8	2
3	PANEL L1B	4 #3 + #8G - 1 1/4"C	250 A	3	100 A	6.1	4.4	4.3	3
4	PANEL M1B	4 #500 + #3G - 4"C	400 A	3	400 A	78.0	71.0	68.0	2
5	PANEL L1C	4 #1 + #6G - 2"C	250 A	3	125 A	29.0	27.5	27.0	3
6	PANEL M1C	4 #500KCMIL + #3G - 4"C	400 A	3	350 A	54.6	61.5	53.8	2
7	PANEL L2C	4 #250KCMIL + #4G - 2 1/2"C	250 A	3	250 A	36.1	34.8	34.6	2
8	PANEL ELH1B (VIA ATS-EL)	4 #3 + #8G - 1 1/4"C	100 A	3	100 A	3.7	4.6	4.6	2
9	PANEL ESH1B (VIA ATS-ES)	4 #4/0 + 4G - 2 1/2"C	250 A	3	225 A	37.1	39.1	25.7	3
10	PANEL M2B	2 SETS [4 #350KCMIL + #1G - 3"C]	600 A	3	600 A	118.4	118.4	118.4	2
11	PANEL M2C	4 #500 + #3G - 4"C	400 A	3	400 A	81.6	78.8	74.1	2
12	SPACE AND PROVISON	--	100 A	3	0 A	0.0	0.0	0.0	
13	SPACE AND PROVISON	--	250 A	3	0 A	0.0	0.0	0.0	
14	SPACE AND PROVISION	--	400 A	3	0 A	0.0	0.0	0.0	
15	SPACE AND PROVISON	--	400 A	3	0 A	0.0	0.0	0.0	
16	SPACE AND PROVISION	--	400 A	3	0 A	0.0	0.0	0.0	
17	SPACE AND PROVISION	--	250 A	3	0 A	0.0	0.0	0.0	
18	SPACE AND PROVISION	--	250 A	3	0 A	0.0	0.0	0.0	
19	SPACE AND PROVISION	--	250 A	3	0 A	0.0	0.0	0.0	
20	SPACE AND PROVISION	--	250 A	3	0 A	0.0	0.0	0.0	
						491.9	489.7	452.7	

CONNECTED LOAD = 1434.2 kVA

DEMAND LOAD = 1329.2 kVA — LOCATION ELEC B111

LOAD	LOAD CLASSIFICATION	DESCRIPTION	CONNECTED (KVA)	DEMAND (KVA)	PANEL TOTALS	
EQP	EQUIPMENT	100% CONTINUOUS LOAD	83 kVA	83 kVA	TOTAL LOAD (CONNECTED):	1434.2
KIT	KITCHEN EQUIPMENT	6 OR MORE AT 65%	58 kVA	50 kVA	TOTAL CURRENT...	1725 A
LTG	LIGHTING	100% CONTINUOUS LOAD	42 kVA	42 kVA		
MECH	MECHANICAL	100% CONTINUOUS LOAD	1032 kVA	1032 kVA	TOTAL LOAD (DEMAND):	1329.2
REC	RECEPTACLES	100% FIRST 10 KVA, 50% REMAINING	204 kVA	107 kVA	TOTAL CURRENT (DEMAND):	1599 A

SWITCHBOARD NOTES:

1. MAIN CIRCUIT BREAKERS: PROVIDE TWO 100% RATED CIRCUIT BREAKERS WITH ADJUSTABLE ELECTRONIC TRIP UNITS (LSIG SETTINGS) SERVING THE MAIN BUS. CIRCUIT BREAKERS SHALL BE DESIGNATED AS FOLLOWS: #1 - MAIN CIRCUIT BREAKER AND #2 GENERATOR DOCKING STATION CIRCUIT BREAKER. BOTH MAIN CIRCUIT BREAKERS SHALL BE KEY INTERLOCKED TO PREVENT SIMULTANIOUS CLOSURE OF BOTH CIRCUIT BREAKERS.

2. DISTRIBUTION BREAKER: PROVIDE 80% RATED CIRCUIT BREAKER, ELECTRONIC TRIP WITH LSI ADJUSTABLE TRIP.

3. DISTRIBUTION BREAKER: PROVIDE 80% RATED MOLDED CASE CIRCUIT BREAKER

WIRING PANEL SCHEDULE C1A

120/208 VOLTS — 3 PHASE 4 WIRE — 100 AMP MAINS — RECESSED

CIRCUIT	DESCRIPTION	WIRE/CONDUIT	POLE	AMP	A	A	B	B	C	C	AMP	POLE	WIRE/CONDUIT	DESCRIPTION	CIRCUIT
1	REC SECRETARY AREA A102	#10-3/4"C	1	20 A	1.1	0.7					20 A	1	#12-3/4"C	REC NURSE OFFICE A121	2
3	REC GUIDANCE OFFICE A113	#12-3/4"C	1	20 A			1.1	1.1			20 A	1	#12-3/4"C	REC COMMUNITY ACTIVITY...	4
5	REC COMMUNITY ACTIVITY...	#10-3/4"C	1	20 A					1.1	0.1	20 A	2	#12-3/4"C	COPIER	6
7	REC SW/PSYCH OFF A111	#12-3/4"C	1	20 A	1.1	0.1									8
9	REC COMM ROOM A125	#10-3/4"C	1	20 A			1.1	0.9			20 A	1	#10-3/4"C	REC PRINCIPAL A105	10
11	REC WORK/RECORDS A106	#12-3/4"C	1	20 A					0.7	1.1	20 A	1	#10-3/4"C	REC ASSISTANT PRINCIPAL...	12
13	REC CONFERENCE A104	#12-3/4"C	1	20 A	0.7	0.7					20 A	1	#12-3/4"C	REC WORK/RECORDS A106	14
15	REC PE - LARGE EQUIPMEN...	#12-3/4"C	1	20 A			0.2	0.0			20 A	3	4#8+ #8G- 1"C	SPD	16
17	REC TV ROOM B142	#12-3/4"C	1	20 A					1.1	0.0					18
19	SPARE	--	1	20 A	0.0	0.0									20
21	SPARE	--	1	20 A			0.0	0.0			20 A	1	--	SPARE	22
23	SPARE	--	1	20 A					0.0	0.0	20 A	1	--	SPARE	24
25	SPARE	--	1	20 A	0.0	0.0					20 A	1	--	SPARE	26
27	SPARE	--	1	20 A			0.0	0.0			20 A	1	--	SPARE	28
29	SPARE	--	1	20 A					0.0	0.0	20 A	1	--	SPARE	30
					4.4		4.3		4.1						

CONNECTED LOAD = 12.8 KVA

DEMAND LOAD = 11.4 KVA — MAIN BREAKER 100 AMPS

MIN AIC RATING = 10,000 AMPS SYMMETRICAL — LOCATION CORRIDOR A10

NOTES:
1. PROVIDE 200% RATED NEUTRAL BUS.
2. PROVDE DEDICATED NEUTRAL CONDUCTOR FOR EACH CIRCUIT.

WIRING PANEL SCHEDULE C1B

120/208 VOLTS — 3 PHASE 4 WIRE — 100 AMP MAINS — SURFACE

CIRCUIT	DESCRIPTION	WIRE/CONDUIT	POLE	AMP	A	A	B	B	C	C	AMP	POLE	WIRE/CONDUIT	DESCRIPTION	CIRCUIT
1	REC BUILDING SERVICES...	#12-3/4"C	1	20 A	0.7	0.9					20 A	1	#10-3/4"C	REC CAFETERIA B128	2
3	REC PLATFORM B127	#8-3/4"C	1	20 A			1.3	0.7			20 A	1	#8-3/4"C	REC STORAGE B134	4
5	REC PLATFORM B127	#8-3/4"C	1	20 A					0.7	0.9	20 A	1	#8-3/4"C	REC INSTRUMENTAL...	6
7	REC VOCAL/CHORAL...	#8-3/4"C	1	20 A	0.9	0.0					30 A	3	4#8+ #8G- 1"C	SPD	8
9	REC INSTRUMENT STORAG...	#8-3/4"C	1	20 A			1.1	0.0							10
11	REC PE INSTRUCTOR OFFIC...	#12-3/4"C	1	20 A					0.7	0.0					12
13	REC TV CAFETERIA B128	#12-3/4"C	1	20 A	0.7	0.0					20 A	1	--	SPARE	14
15	REC ELEC B111	#10-3/4"C	1	20 A			0.7	0.0			20 A	1	--	SPARE	16
17	SPARE	--	1	20 A					0.0	0.0	20 A	1	--	SPARE	18
19	SPARE	--	1	20 A	0.0	0.0					20 A	1	--	SPARE	20
21	SPARE	--	1	20 A			0.0	0.0			20 A	1	--	SPARE	22
23	SPARE	--	1	20 A					0.0	0.0	20 A	1	--	SPARE	24
25	SPACE & PROVISION	--	--	--	0.0	4.4					100 A	3	3#2+#2/0N +#8G -1-1/4"C	PANEL C1A	26
27	SPACE & PROVISION	--	--	--			0.0	4.3							28
29	SPACE & PROVISION	--	--	--					0.0	4.1					30
					7.7		8.1		6.4						

CONNECTED LOAD = 22.1 KVA

DEMAND LOAD = 16.1 KVA — MAIN BREAKER 100 AMPS

MIN AIC RATING = 10,000 AMPS SYMMETRICAL — LOCATION ELEC B111

NOTES:
1. PROVIDE 200% RATED NEUTRAL BUS.
2. PROVIDE DEDICATED NEUTRAL CONDUCTOR FOR EACH CIRCUIT.

WIRING PANEL SCHEDULE C1C

120/208 VOLTS — 3 PHASE 4 WIRE — 225 AMP MAINS — SURFACE

CIRCUIT	DESCRIPTION	WIRE/CONDUIT	POLE	AMP	A	A	B	B	C	C	AMP	POLE	WIRE/CONDUIT	DESCRIPTION	CIRCUIT
1	REC FACULTY LOUNGE C162	#12-3/4"C	1	20 A	1.1	1.1					20 A	1	#12-3/4"C	REC ESOL RESOURCE ROO...	2
3	REC ENRICHMENT/REMEDIA...	#12-3/4"C	1	20 A			1.1	0.7			20 A	1	#12-3/4"C	REC CLASSROOM C156	4
5	REC CLASSROOM C156	#12-3/4"C	1	20 A					0.9	0.9	20 A	1	#12-3/4"C	REC CLASSROOM C152	6
7	REC CLASSROOM C152	#12-3/4"C	1	20 A	1.1	0.9					20 A	1	#10-3/4"C	REC CLASSROOM C149	8
9	REC CLASSROOM C147	#10-3/4"C	1	20 A			0.7	1.1			20 A	1	#8-3/4"C	REC CLASSROOM C147	10
11	REC CLASSROOM C144	#8-3/4"C	1	20 A					0.9	1.1	20 A	1	#12-3/4"C	REC EARLY CHILDHOOD...	12
13	REC EARLY CHILDHOOD...	#12-3/4"C	1	20 A	0.7	0.7					20 A	1	#12-3/4"C	REC PREKINDERGARTEN...	14
15	REC VIDEO PRODUCTION...	#12-3/4"C	1	20 A			1.1	0.7			20 A	1	#12-3/4"C	REC CONTROL ROOM C108	16
17	REC CONTROL ROOM C108	#12-3/4"C	1	20 A					0.7	1.1	20 A	1	#12-3/4"C	REC LIBRARIAN OFFICE C109	18
19	REC MEDIA C100	#12-3/4"C	1	20 A	0.7	0.7					20 A	1	#12-3/4"C	REC MEDIA C100	20
21	REC MEDIA C100	#12-3/4"C	1	20 A			0.7	0.4			20 A	1	#12-3/4"C	REC EQUIPMENT STORAGE...	22
23	REC STORAGE C103	#12-3/4"C	1	20 A					0.4	0.7	20 A	1	#12-3/4"C	REC MAKER SPACE C102	24
25	REC MAKER SPACE C102	#12-3/4"C	1	20 A	1.1	0.7					20 A	1	#12-3/4"C	REC DIGITAL LEARNING ARE...	26
27	REC PREKINDERGARTEN...	#10-3/4"C	1	20 A			0.7	1.1			20 A	1	#10-3/4"C	REC ART CLASSROOM C111	28
29	REC KINDERGARTEN C113	#10-3/4"C	1	20 A					0.9	0.7	20 A	1	#10-3/4"C	REC KINDERGARTEN C116	30
31	REC KINDERGARTEN C116	#10-3/4"C	1	20 A	0.9	0.4					20 A	1	#10-3/4"C	REC SPEECH AND LANGUAG...	32
33	REC KINDERGARTEN C120	#10-3/4"C	1	20 A			0.9	1.1			20 A	1	#8-3/4"C	REC KINDERGARTEN C120	34
35	REC KINDERGARTEN C124	#8-3/4"C	1	20 A					0.9	0.9	20 A	1	#8-3/4"C	REC KINDERGARTEN C127	36
37	REC TV VESTIBULE C10	#10-3/4"C	1	20 A	0.9										38
39	SPARE	--	1	0 A			0.0								40
41	REC COLLABORATIVE...	#10-3/4"C	1	20 A					0.4						42
43	REC FACULTY COPIER	#12-3/4"C	2	20 A	0.1	0.0					30 A	3	4#8+#8G -1"C	SPD	44
45							0.1	0.0							46
47	SPARE	--	1	20 A					0.0	0.0					48
49	SPARE	--	1	20 A	0.0	0.0					20 A	1	--	SPARE	50
51	SPARE	--	1	20 A			0.0	0.0			20 A	1	--	SPARE	52
53	SPARE	--	1	20 A					0.0	0.0	20 A	1	--	SPARE	54
					11.1		10.4		10.4						

CONNECTED LOAD = 31.9 KVA

DEMAND LOAD = 20.9 KVA — MAIN BREAKER 150 AMPS

MIN AIC RATING = 10,000 AMPS SYMMETRICAL — LOCATION ELEC. C104

NOTES:
1. PROVIDE 200% RATED NEUTRAL BUS.
2. PROVIDE DEDICATED NEUTRAL CONDUCTOR FOR EACH CIRCUIT.

WIRING PANEL SCHEDULE C2C

120/208 VOLTS — 3 PHASE 4 WIRE — 225 AMP MAINS — SURFACE

CIRCUIT	DESCRIPTION	WIRE/CONDUIT	POLE	AMP	A	A	B	B	C	C	AMP	POLE	WIRE/CONDUIT	DESCRIPTION	CIRCUIT
1	REC CLASSROOM C254	#12-3/4"C	1	20 A	0.9	1.1					20 A	1	#12-3/4"C	REC E.L.A. C253	2
3	REC CLASSROOM C252	#12-3/4"C	1	20 A			0.9	0.9			20 A	1	#12-3/4"C	REC CLASSROOM C250	4
5	REC CLASSROOM C248	#12-3/4"C	1	20 A					1.1	0.9	20 A	1	#12-3/4"C	REC CLASSROOM C248	6
7	REC CLASSROOM C246	#12-3/4"C	1	20 A	0.9	1.1					20 A	1	#12-3/4"C	REC CLASSROOM C246	8
9	REC CLASSROOM C244	#10-3/4"C	1	20 A			0.9	0.9			20 A	1	#10-3/4"C	REC CLASSROOM C242	10
11	REC CLASSROOM C242	#10-3/4"C	1	20 A					1.1	0.9	20 A	1	#8-3/4"C	REC CLASSROOM C240	12
13	REC COLLAB. LEARNING C239	#12-3/4"C	1	20 A	1.1	0.9					20 A	1	#12-3/4"C	REC CLASSROOM C238	14
15	REC CLASSROOM C232	#10-3/4"C	1	20 A			1.1	0.7			20 A	1	#12-3/4"C	REC WORKROOM C207	16
17	REC WKRM COPIER		2	20 A					0.1	1.3	20 A	1	#12-3/4"C	REC CLASSROOM C212	18
19					0.1	0.7					20 A	1	#12-3/4"C	REC E.L.A. C214	20
21	REC MECH. C206	#12-3/4"C	1	20 A			0.4	0.7			20 A	1	#12-3/4"C	REC CLASSROOM C200	22
23	REC SPECIAL ED. C215	#12-3/4"C	1	20 A					0.9	0.9	20 A	1	#10-3/4"C	REC CLASSROOM C216	24
25	REC CLASSROOM C200	#12-3/4"C	1	20 A	1.1	0.9					20 A	1	#10-3/4"C	REC CLASSROOM C218	26
27	REC E.L.A. C217	#10-3/4"C	1	20 A			1.1	1.1			20 A	1	#10-3/4"C	REC E.L.A. C221	28
29	REC CLASSROOM C220	#10-3/4"C	1	20 A					0.9	0.9	20 A	1	#8-3/4"C	REC CLASSROOM C224	30
31	REC CLASSROOM C222	#8-3/4"C	1	20 A	0.9	0.9					20 A	1	#8-3/4"C	REC CLASSROOM C226	32
33	REC E.L.A. C225	#8-3/4"C	1	20 A			1.1	1.1			20 A	1	#8-3/4"C	REC E.L.A. C229	34
35	REC CLASSROOM C228	#/-3/4"C	1	20 A					0.9	0.4	20 A	1	#8-3/4"C	REC STORAGE C223	36
37	REC CLASSROOM C230	#8-3/4"C	1	20 A	0.9	0.0					30 A	3	4#8+ #8G- 1"C	SPD	38
39	REC COLLAB. LEARNING C231	12-3/4"C	1	20 A			1.4	0.0							40
41	RECEPTACLE	#12-3/4"C	1	20 A					0.2	0.0					42
43	SPARE	--	1	20 A	0.0	0.0					20 A	1	--	SPARE	44
45	SPARE	--	1	20 A			0.0	0.0			20 A	1	--	SPARE	46
47	SPARE	--	1	20 A					0.0	0.0	20 A	1	--	SPARE	48
49	SPARE	--	1	20 A	0.0	0.0					20 A	1	--	SPARE	50
51	SPARE	--	1	20 A			0.0	0.0			20 A	1	--	SPARE	52
53	SPARE	--	1	20 A					0.0	0.0	20 A	1	--	SPARE	54
					11.4		12.2		10.4						

CONNECTED LOAD = 34.0 KVA

DEMAND LOAD = 22.0 KVA — MAIN BREAKER 150 AMPS

MIN AIC RATING = 10,000 AMPS SYMMETRICAL — LOCATION ELEC. C210

NOTES:
1. PROVIDE 200% RATED NEUTRAL BUS.
2. PROVIDE DEDICATED NEUTRAL CONDUCTOR FOR EACH CIRCUIT.

SCHEDULE KEY

SB	C1C
C1A	C2C
C1B	

James Posey Associates
Engineering Your Vision
Mechanical & Electrical Engineers
jamesposey.com
tel 410-265-6100
fax 410-298-9820
3112 Lord Baltimore Drive
Baltimore, MD 21244

Professional Certification. I hereby certify that these documents were prepared or approved by me, and that I am a duly licensed professional engineer under the laws of the state of Maryland, License No. 24861, Expiration date: 02-24-2018.

JPA PROJECT NO. 6542-15

11720 Beltsville Drive
Suite 600
Calverton, MD 20705
Tel: 301.595.1000
www.grimmandparker.com
G+P GRIMM AND PARKER

GP #21541

SCHEDULES

LANSDOWNE ELEMENTARY SCHOOL
2301 ALMA ROAD, BALTIMORE, MD

DATE	DESCRIPTION
10/7/16	ADD NO.1

E-6.2

11/17/16
BID SET

© 2016 James Posey Associates, Inc.

© GRIMM AND PARKER, P.C. 2014

WIRING PANEL SCHEDULE ELH1B

480/277 VOLTS | 3 PHASE 4 WIRE | 125 AMP MAINS | SURFACE

CIR-CUIT	DESCRIPTION	WIRE/ CONDUIT	POLE	AMP	A		B		C		AMP	POLE	WIRE/ CONDUIT	DESCRIPTION	CIR-CUIT
1	LTG - LAVATORY	#10-3/4"C	1	20 A	0.1	0.2					20 A	1	#8-3/4"C	LTG - ADMINISTRATION	2
3	LTG - MEN/WOMEN RR, CORR.	#10-3/4"C	1	20 A			0.2	0.2			20 A	1	#8-3/4"C	LTG - BAND/CHORUS	4
5	LTG - CAFETERIA/GYM	#10-3/4"C	1	20 A					0.9	1.8	20 A	1	#12-3/4"C	LTG - AREA A/B EXT.	6
7	LTG - AREA A EXIT	#10-3/4"C	1	20 A	0.0	0.0					20 A	1	#10-3/4"C	LTG - AREA B EXIT	8
9	LTG - ELEC./MECH.	#12-3/4"C	1	20 A			0.6	0.0			20 A	1	--	SPARE	10
11	SPARE	--	1	20 A					0.0	0.0	20 A	1	--	SPARE	12
13	SPARE	--	1	20 A	0.0	0.0					20 A	1	--	SPARE	14
15	SPARE	--	1	20 A			0.0	0.0			20 A	1	--	SPARE	16
17	SPARE	--	1	20 A					0.0	0.0	20 A	1	--	SPARE	18
19	SPACE & PROVISION	--	--	--	0.0	0.4					30 A	3	3#10+ #10G- 3/4"C	XFMR TELL1B (SERVING PANEL ELL1B)	20
21	SPACE & PROVISION	--	--	--			0.0	0.2							22
23	SPACE & PROVISION	--	--	--					0.0	0.2					24
25	PANEL ELH1C	4#6+ #8G- 1 1/4"C	3	50 A	0.5	2.5					50 A	3	4#6+ #8G- 1 1/4"C	PANEL ELH2C	26
27							1.9	1.4							28
29									0.8	0.9					30
					3.7		4.6		4.6						

CONNECTED LOAD = 12.8 KVA

DEMAND LOAD = 12.8 KVA

MIN AIC RATING = 35,000 AMPS SYMMETRICAL

MAIN BREAKER 100 AMPS

LOCATION AUX. ELEC B111A

NOTES:
1. PROVIDE FUSIBLE TYPE PANELBOARD.
2. PROVIDE INTEGRAL SURGE PROTECTIVE DEVICE.

WIRING PANEL SCHEDULE ELH1C

480/277 VOLTS | 3 PHASE 4 WIRE | 125 AMP MAINS | SURFACE

CIR-CUIT	DESCRIPTION	WIRE/ CONDUIT	POLE	AMP	A		B		C		AMP	POLE	WIRE/ CONDUIT	DESCRIPTION	CIR-CUIT
1	LTG - NORTH CORRIDOR	#10-3/4"C	1	20 A	0.1	0.4					20 A	1	#12-3/4"C	LTG - CLASSROOMS CENTRAL	2
3	LTG - CLASSROOMS WEST	#12-3/4"C	1	20 A			1.2	0.7			20 A	1	#8-3/4"C	LTG - CLASSROOMS EAST	4
5	LTG - AREA C EXT.	#12-3/4"C	1	20 A					0.8	0.0	20 A	1	--	SPARE	6
7	LTG - AREA C EXIT	#10-3/4"C	1	20 A	0.1	0.0					20 A	1	--	SPARE	8
9	SPARE	--	1	20 A			0.0	0.0			20 A	1	--	SPARE	10
11	SPARE	--	1	20 A					0.0	0.0	20 A	1	--	SPARE	12
13	SPACE & PROVISION	--	--	--	0.0	0.0					--	--	--	SPACE & PROVISION	14
15	SPACE & PROVISION	--	--	--			0.0	0.0			--	--	--	SPACE & PROVISION	16
17	SPACE & PROVISION	--	--	--					0.0	0.0	--	--	--	SPACE & PROVISION	18
					0.5		1.9		0.8						

CONNECTED LOAD = 3.2 KVA

DEMAND LOAD = 3.2 KVA

MIN AIC RATING = 14,000 AMPS SYMMETRICAL

MAIN BREAKER 50 AMPS

LOCATION ELEC. C104

NOTES:
1. PROVIDE FUSIBLE TYPE PANELBOARDS.
2. PROVIDE INTEGRAL SURGE PROTECTIVE DEVICE.

WIRING PANEL SCHEDULE ELH2C

480/277 VOLTS | 3 PHASE 4 WIRE | 125 AMP MAINS | SURFACE

CIR-CUIT	DESCRIPTION	WIRE/ CONDUIT	POLE	AMP	A		B		C		AMP	POLE	WIRE/ CONDUIT	DESCRIPTION	CIR-CUIT
1	LTG - CLASSROOMS CENTRAL	#12-3/4"C	1	20 A	0.5	1.2					20 A	1	#12-3/4"C	LTG - CLASSROOMS WEST	2
3	LTG - NORTH CORRIDOR	#10-3/4"C	1	20 A			0.6	0.9			20 A	1	#10-3/4"C	LTG - CLASSROOMS EAST	4
5	LTG - EXT. AREA C WEST	#10-3/4"C	1	20 A					0.9	0.0	20 A	1	#10-3/4"C	LTG - AREA C 2ND FLR EXIT	6
7	LTG - EXT. AREA C EAST	#8-3/4"C	1	20 A	0.7	0.0					20 A	1	--	SPARE	8
9	SPARE	--	1	20 A			0.0	0.0			20 A	1	--	SPARE	10
11	SPARE	--	1	20 A					0.0	0.0	20 A	1	--	SPARE	12
13	SPACE & PROVISION	--	--	--	0.0	0.0					--	--	--	SPACE & PROVISION	14
15	SPACE & PROVISION	--	--	--			0.0	0.0			--	--	--	SPACE & PROVISION	16
17	SPACE & PROVISION	--	--	--					0.0	0.0	--	--	--	SPACE & PROVISION	18
					2.5		1.4		0.9						

CONNECTED LOAD = 4.9 KVA

DEMAND LOAD = 4.9 KVA

MIN AIC RATING = 14,000 AMPS SYMMETRICAL

MAIN BREAKER 50 AMPS

LOCATION ELEC. C210

NOTES:
1. PROVIDE FUSIBLE TYPE PANELBOARD.
2. PROVIDE INTEGRAL SURGE PROTECTIVE DEVICE.

WIRING PANEL SCHEDULE ELL1B

120/208 VOLTS | 3 PHASE 4 WIRE | 100 AMP MAINS | SURFACE

CIR-CUIT	DESCRIPTION	WIRE/ CONDUIT	POLE	AMP	A		B		C		AMP	POLE	WIRE/ CONDUIT	DESCRIPTION	CIR-CUIT
1	REC CAFETERIA B128	#10-3/4"C	1	20 A	0.2	0.2					20 A	1	#10-3/4"C	REC PE - LARGE EQUIPMEN...	2
3	FIRE ALARM VOICE EVAC...	#12-3/4"C	1	20 A			0.2	0.0			20 A	1	--	SPARE	4
5	FIRE ALARM CONTROL PANEL	#12-3/4"C	1	20 A					0.2	0.0	20 A	1	--	SPARE	6
7	SPARE	--	1	20 A	0.0	0.0					20 A	1	--	SPARE	8
9	SPARE	--	1	20 A			0.0	0.0			20 A	1	--	SPARE	10
11	SPARE	--	1	20 A					0.0	0.0	20 A	1	--	SPARE	12
13	SPACE & PROVISION	--	--	--	0.0	0.0					--	--	--	SPACE & PROVISION	14
15	SPACE & PROVISION	--	--	--			0.0	0.0			--	--	--	SPACE & PROVISION	16
17	SPACE & PROVISION	--	--	--					0.0	0.0	--	--	--	SPACE & PROVISION	18
					0.4		0.2		0.2						

CONNECTED LOAD = 0.7 KVA

DEMAND LOAD = 0.7 KVA

MIN AIC RATING = 10,000 AMPS SYMMETRICAL

MAIN BREAKER 50 AMPS

LOCATION AUX. ELEC B111A

NOTES:
1. PROVIDE FUSIBLE TYPE PANELBOARD.
2. PROVIDE INTEGRAL SURGE PROTECTIVE DEVICE.

WIRING PANEL SCHEDULE ESH1B

480/277 VOLTS | 3 PHASE 4 WIRE | 225 AMP MAINS | SURFACE

CIR-CUIT	DESCRIPTION	WIRE/ CONDUIT	POLE	AMP	A		B		C		AMP	POLE	WIRE/ CONDUIT	DESCRIPTION	CIR-CUIT
1	PANEL ESH2B	4#6+ #10G- 1"C	3	60 A	6.0	31.1					150 A	3	3#1/0+ #6G- 2"C	XFMR TESL1B (NOTE 1) (SERVING PANEL ESL1B)	2
3							6.0	33.1							4
5									0.0	25.7					6
7	SPARE	--	1	20 A	0.0	0.0					20 A	1	--	SPARE	8
9	SPARE	--	1	20 A			0.0	0.0			20 A	1	--	SPARE	10
11	SPARE	--	1	20 A					0.0	0.0	20 A	1	--	SPARE	12
13	SPACE & PROVISION	--	--	--	0.0	0.0					--	--	--	SPACE & PROVISION	14
15	SPACE & PROVISION	--	--	--			0.0	0.0			--	--	--	SPACE & PROVISION	16
17	SPACE & PROVISION	--	--	--					0.0	0.0	--	--	--	SPACE & PROVISION	18
					37.1		39.1		25.7						

CONNECTED LOAD = 101.8 KVA

DEMAND LOAD = 101.3 KVA

MIN AIC RATING = 35,000 AMPS SYMMETRICAL

MAIN BREAKER 150 AMPS

LOCATION ELEC B111

NOTES:
1. PROVIDE SUB-FEED CIRCUIT BREAKER.

WIRING PANEL SCHEDULE ESH2B

480/277 VOLTS | 3 PHASE 4 WIRE | 125 AMP MAINS | SURFACE

CIR-CUIT	DESCRIPTION	WIRE/ CONDUIT	POLE	AMP	A		B		C		AMP	POLE	WIRE/ CONDUIT	DESCRIPTION	CIR-CUIT
1	DOAS-2 ELEC. UNIT HEATER	#12-3/4"C	1	20 A	3.0	3.0					20 A	1	#12-3/4"C	DOAS-1 ELEC. UNIT HEATER	2
3	DOAS-3 ELEC. UNIT HEATER	#12-3/4"C	1	20 A			3.0	3.0			20 A	1	#12-3/4"C	ERU-1 ELEC. UNIT HEATER	4
5	SPARE	--	1	20 A					0.0	0.0	20 A	1	--	SPARE	6
7	SPARE	--	1	20 A	0.0	0.0					20 A	1	--	SPARE	8
9	SPACE & PROVISION	--	--	--			0.0	0.0			--	--	--	SPACE & PROVISION	10
11	SPACE & PROVISION	--	--	--					0.0	0.0	--	--	--	SPACE & PROVISION	12
13	SPACE & PROVISION	--	--	--	0.0	0.0					--	--	--	SPACE & PROVISION	14
15	SPACE & PROVISION	--	--	--			0.0	0.0			--	--	--	SPACE & PROVISION	16
17	SPACE & PROVISION	--	--	--					0.0	0.0	--	--	--	SPACE & PROVISION	18
					6.0		6.0		0.0						

CONNECTED LOAD = 12.0 KVA

DEMAND LOAD = 12.0 KVA

MIN AIC RATING = 10,000 AMPS SYMMETRICAL

MAIN BREAKER 60 AMPS

LOCATION MECHANICAL B200

NOTES:

WIRING PANEL SCHEDULE ESL1B (TWO SECTION)

120/208 VOLTS | 3 PHASE 4 WIRE | 400 AMP MAINS | SURFACE

CIR-CUIT	DESCRIPTION	WIRE/ CONDUIT	POLE	AMP	A		B		C		AMP	POLE	WIRE/ CONDUIT	DESCRIPTION	CIR-CUIT
1	REC WIRE CLOSET B138	#12-3/4"C	1	20 A	0.4	0.4					20 A	1	#12-3/4"C	REC WIRE CLOSET B138	2
3	REC WIRE CLOSET B138	#12-3/4"C	1	20 A			0.4	0.4			20 A	1	#12-3/4"C	REC WIRE CLOSET B138	4
5	REC WIRE CLOSET B138	#12-3/4"C	2	20 A					0.7	0.7	20 A	2	#12-3/4"C	REC WIRE CLOSET B138	6
7					0.7	0.7									8
9	REC WIRE CLOSET B138	#12-3/4"C	1	20 A			1.4	1.4			20 A	1		REC WIRE CLOSET B138	10
11	REC WIRE CLOSET B138	#12-3/4"C	1	20 A					1.4	1.4	20 A	1	#12-3/4"C	REC WIRE CLOSET B138	12
13	REC WIRE CLOSET B138	#10-3/4"C	2	30 A	1.2	1.2					30 A	2	#10-3/4"C	REC WIRE CLOSET B138	14
15							1.2	1.2							16
17	REC WIRE CLOSET B138	#12-3/4"C	1	20 A					0.6	1.2	20 A	2	#12-3/4"C	REC WIRE CLOSET B138	18
19	REC WIRE CLOSET B138	#12-3/4"C	2	20 A	1.2	1.2									20
21							1.2	0.6			20 A	1	#12-3/4"C	REC WIRE CLOSET B138	22
23	ACS POWER SUPPLY	#10-3/4"C	1	20 A					1.0	0.4	20 A	1	#12-3/4"C	REC ROOFTOP	24
25	RECEIVING B118	#12-3/4"C	1	20 A	0.2	0.2					20 A	1	#12-3/4"C	COOLER BLOWER COIL	26
27	ACS POWER SUPPLY	#8-3/4"C	1	20 A			1.0	0.5			20 A	1	#12-3/4"C	COOLER SYSTEM	28
29	FREEZER BLOWER COIL	#12-3/4"C	2	20 A					0.1	2.4	25 A	3	3#10+ #10G- 3/4"C	FREEZER COMPRESSOR RACK	30
31					0.1	2.4									32
33	FREEZER SYSTEM	#12-3/4"C	1	20 A			0.7	2.4							34
35	BATTERY CHARGER	--	1	20 A					0.0	5.2	100 A	3	4#1/0+ #4G- 2"C	PANEL ESL2C	36
37	PANEL ESL1C	4#1/0+ #4G- 2"C	3	100 A	10.8	8.5									38
39							10.8	8.0							40
41									8.7	0.2	20 A	1	#12-3/4"C	HEAT TRACE - RHPU-2	42
43	COOLER COMPRESSOR RACK	#12-3/4"C	3	20 A	1.8	0.2					20 A	1	#12-3/4"C	HEAT TRACE - RHPU-1	44
45							1.8	0.1			20 A	1	#12-3/4"C	BATTERY CHARGER	46
47									1.8	0.0	20 A	1	--	SPARE	48
49	SPARE	--	1	20 A	0.0	0.0					20 A	1	--	SPARE	50
51	SPARE	--	1	20 A			0.0	0.0			20 A	1	--	SPARE	52
53	SPARE	--	1	20 A					0.0	0.0	20 A	1	--	SPARE	54
55	SPARE	--	1	20 A	0.0	0.0					20 A	1	--	SPARE	56
57	SPARE	--	1	20 A			0.0	0.0			20 A	1	--	SPARE	58
59	SPARE	--	1	20 A					0.0	0.0	20 A	1	--	SPARE	60
					31.1		33.1		25.7						

CONNECTED LOAD = 89.8 KVA

DEMAND LOAD = 89.3 KVA

MIN AIC RATING = 10,000 AMPS SYMMETRICAL

MAIN BREAKER 250 AMPS

LOCATION MECH. B110

WIRING PANEL SCHEDULE ESL1C

120/208 VOLTS | 3 PHASE 4 WIRE | 225 AMP MAINS | SURFACE

CIR-CUIT	DESCRIPTION	WIRE/ CONDUIT	POLE	AMP	A		B		C		AMP	POLE	WIRE/ CONDUIT	DESCRIPTION	CIR-CUIT
1	REC MDF/SERVER C105	#12-3/4"C	1	20 A	0.4	0.4					20 A	1	#12-3/4"C	REC MDF/SERVER C105	2
3	REC MDF/SERVER C105	#12-3/4"C	1	20 A			0.4	0.4			20 A	1	#12-3/4"C	REC MDF/SERVER C105	4
5	REC MDF/SERVER C105	#12-3/4"C	2	20 A					0.7	0.7	20 A	2	#12-3/4"C	REC MDF/SERVER C105	6
7					0.7	0.7									8
9	REC MDF/SERVER C105	#12-3/4"C	2	20 A			0.1	0.1			20 A	2	#12-3/4"C	REC MDF/SERVER C105	10
11									0.1	0.1					12
13	REC MDF/SERVER C105	#12-3/4"C	2	20 A	0.1	0.1					20 A	2	#12-3/4"C	REC MDF/SERVER C105	14
15							0.1	0.1							16
17	REC MDF/SERVER C105	#12-3/4"C	2	20 A					0.1	0.1	20 A	2	#12-3/4"C	REC MDF/SERVER C105	18
19					0.1	0.1									20
21	REC MDF/SERVER C105	#12-3/4"C	2	20 A			0.1	0.1			20 A	2	#12-3/4"C	REC MDF/SERVER C105	22
23									0.1	0.1					24
25	REC MDF/SERVER C105	#12-3/4"C	1	20 A	0.4	0.4					20 A	1	#12-3/4"C	REC MDF/SERVER C105	26
27	REC ELEV SUMP PUMP (C166)	#12-3/4"C	1	20 A			1.7	0.2			20 A	1	#12-3/4"C	CORRIDOR C12	28
29	VESTIBULE C10	#12-3/4"C	1	20 A					0.2	0.2	20 A	1	#12-3/4"C	CORRIDOR C14	30
31	CORRIDOR C11	#12-3/4"C	1	20 A	0.2	1.2					20 A	2	#12-3/4"C	REC MDF/SERVER C105	32
33	REC MDF/SERVER C105	#12-3/4"C	2	20 A			1.2	1.2							34
35									1.2	1.2	20 A	2	#12-3/4"C	REC MDF/SERVER C105	36
37	REC MDF/SERVER C105	#12-3/4"C	2	20 A	1.2	1.2									38
39							1.2	0.6			20 A	1	#12-3/4"C	REC MDF/SERVER C105	40
41	REC MDF/SERVER C105	#12-3/4"C	1	20 A					0.6	1.4	20 A	1	#12-3/4"C	REC MDF/SERVER C105	42
43	REC MDF/SERVER C105	#12-3/4"C	1	20 A	1.4	1.4					20 A	1	#12-3/4"C	REC MDF/SERVER C105	44
45	REC MDF/SERVER C105	#12-3/4"C	1	20 A			1.4	1.0			20 A	1	#8-3/4"C	ACS POWER SUPPLY	46
47	ACS POWER SUPPLY	#10-3/4"C	1	20 A					1.0	1.0	20 A	1	#12-3/4"C	CORRIDOR C12	48
49	ACS POWER SUPPLY	#10-3/4"C	1	20 A	1.0	0.0					30 A	3	4#8+ #8G- 1"C	SPD	50
51	REC MDF/SERVER C105	#10-3/4"c	1	20 A			1.1	0.0							52
53	SPARE	--	1	20 A					0.0	0.0					54
55	SPARE	--	1	20 A	0.0	0.0					20 A	1	--	SPARE	56
57	SPARE	--	1	20 A			0.0	0.0			20 A	1	--	SPARE	58
59	SPARE	--	1	20 A					0.0	0.0	20 A	1	--	SPARE	60
61	SPARE	--	1	20 A	0.0	0.0					20 A	1	--	SPARE	62
63	SPARE	--	1	20 A			0.0	0.0			20 A	1	--	SPARE	64
65	SPARE	--	1	20 A					0.0	0.0	20 A	1	--	SPARE	66
67	SPARE	--	1	20 A	0.0	0.0					20 A	1	--	SPARE	68
69	SPARE	--	1	20 A			0.0	0.0			20 A	1	--	SPARE	70
71	SPARE	--	1	20 A					0.0	0.0	20 A	1	--	SPARE	72
					10.8		10.8		8.7						

CONNECTED LOAD = 30.3 KVA

DEMAND LOAD = 30.3 KVA

MIN AIC RATING = 10,000 AMPS SYMMETRICAL

MAIN BREAKER 100 AMPS

LOCATION MDF/SERVER C105

NOTES:

WIRING PANEL SCHEDULE ESL2C

120/208 VOLTS | 3 PHASE 4 WIRE | 100 AMP MAINS | SURFACE

CIR-CUIT	DESCRIPTION	WIRE/ CONDUIT	POLE	AMP	A		B		C		AMP	POLE	WIRE/ CONDUIT	DESCRIPTION	CIR-CUIT
1	REC WIRE CLOSET C205	#12-3/4"C	1	20 A	0.4	0.4					20 A	1	#12-3/4"C	REC WIRE CLOSET C205	2
3	REC WIRE CLOSET C205	#12-3/4"C	2	20 A			0.7	0.7			20 A	2	#12-3/4"C	REC WIRE CLOSET C205	4
5									0.7	0.7					6
7	REC WIRE CLOSET C205	#12-3/4"C	1	20 A	0.4	0.4					20 A	1	#12-3/4"C	REC WIRE CLOSET C205	8
9	REC WIRE CLOSET C205	#12-3/4"C	1	20 A			1.4	1.2			30 A	2	#10-3/4"C	REC WIRE CLOSET C205	10
11	REC WIRE CLOSET C205	#12-3/4"C	1	20 A					1.4	1.2					12
13	REC WIRE CLOSET C205	#12-3/4"C	1	20 A	0.6	1.2					30 A	2	#10-3/4"C	REC WIRE CLOSET C205	14
15	REC WIRE CLOSET C205	#12-3/4"C	1	20 A			1.4	1.2							16
17	REC WIRE CLOSET C205	#10-3/4"C	2	30 A					1.2	1.4	20 A	1	#12-3/4"C	REC WIRE CLOSET C205	18
19					1.2	0.6					20 A	1	#12-3/4"C	REC WIRE CLOSET C205	20
21	REC WIRE CLOSET C205	#10-3/4"C	2	30 A			1.2	0.7			20 A	1	#10-3/4"C	REC ROOF	22
23									1.2	0.2	20 A	1	#10-3/4"C	EMR C256 - ELE CAB...	24
25	HEAT TRACE - DOAS-3	#12-3/4"C	1	20 A	0.2	0.0					20 A	1	--	SPARE	26
27	SPARE	--	1	20 A			0.0	0.0			20 A	1	--	SPARE	28
29	SPARE	--	1	20 A					0.0	0.0	20 A	1	--	SPARE	30
31	SPARE	--	1	20 A	0.0	0.0					20 A	1	--	SPARE	32
33	SPARE	--	1	20 A			0.0	0.0			20 A	1	--	SPARE	34
35	SPARE	--	1	20 A					0.0	0.0	20 A	1	--	SPARE	36
37	SPACE & PROVISION	--	--	--	0.0	0.0					--	--	--	SPACE & PROVISION	38
39	SPACE & PROVISION	--	--	--			0.0	0.0			--	--	--	SPACE & PROVISION	40
41	SPACE & PROVISION	--	--	--					0.0	0.0	--	--	--	SPACE & PROVISION	42
					5.2		8.5		8.0						

CONNECTED LOAD = 21.7 KVA

DEMAND LOAD = 21.7 KVA

MIN AIC RATING = 10,000 AMPS SYMMETRICAL

MAIN BREAKER 100 AMPS

LOCATION WOMEN'S TOILET C204

NOTES:

SCHEDULE KEY

ELH1B	ESH1B	ESL1C
ELH1C	ESH2B	ESL2C
ELH2C	ESL1B	
ELL1B		

James Posey Associates
Engineering Your Vision
Mechanical & Electrical Engineers
jamesposey.com
tel 410-265-6100
fax 410-298-9820
3112 Lord Baltimore Drive
Baltimore, MD 21244

Professional Certification. I hereby certify that these documents were prepared or approved by me, and that I am a duly licensed professional engineer under the laws of the state of Maryland, License No. 24861, Expiration date: 02-24-2018.

STATE OF MARYLAND – MARQUEZ – No. 24861 – PROFESSIONAL ENGINEER

JPA PROJECT NO. 6542-15

11720 Beltsville Drive
Suite 600
Calverton, MD 20705
Tel: 301.595.1000
www.grimmandparker.com
G+P GRIMM AND PARKER

GP #21541

SCHEDULES

LANSDOWNE ELEMENTARY SCHOOL
2301 ALMA ROAD, BALTIMORE, MD

DATE	DESCRIPTION
10/7/16	ADD NO.1

E-6.3

11/17/16
BID SET

© 2016 James Posey Associates, Inc.

WIRING PANEL SCHEDULE K (TWO SECTION)

120/208 VOLTS — 3 PHASE 4 WIRE — 225 AMP MAINS — SURFACE

CIRCUIT	DESCRIPTION	WIRE/ CONDUIT	POLE	AMP	A	A	B	B	C	C	AMP	POLE	WIRE/ CONDUIT	DESCRIPTION	CIRCUIT
1	+ REC - MILK COOLER,...	#12-3/4"C	1	20 A	0.5	0.4					20 A	1	#12-3/4"C	+ DRY ST. B120 TRAP...	2
3	+ REC B124 AND B125	#12-3/4"C	1	20 A			0.5	4.2			20 A	2	#12-3/4"C	REC HOT FOOD COUNTER	4
5	REC - PASS-THRU HEATED CABINET, MOBILE	#12-3/4"C	2	20 A					0.7	4.2					6
7					0.7	1.2					20 A	1	#12-3/4"C	+ REC PASS-THRU FRIDGE	8
9	+ REC FROST TOP COUNTER	#12-3/4"C	1	20 A			1.0	0.2			20 A	1	#12-3/4"C	+ REC CASH REGISTER	10
11	+ REC SOLID TOP COUNTER	#12-3/4"C	1	20 A					0.2	0.2	20 A	1	#12-3/4"C	+ REC CASH REGISTER	12
13	+ REC ICE CREAM MERCH	#12-3/4"C	1	20 A	0.3	0.3					20 A	1	#12-3/4"C	+ REC ICE CREAM...	14
15	+ REC SOLID TOP COUNTER	#12-3/4"C	1	20 A			0.2	0.0			20 A	1	--	+ SPARE	16
17	+ REC FROST TOP COUNTER	#12-3/4"C	1	20 A					1.0	1.4	20 A	1	#12-3/4"C	+ REC HTD TRANS CABINET	18
19	REC SERVING LINE B124	#12-3/4"C	2	20 A	5.8	1.4					20 A	1	#12-3/4"C	+ REC HTD TRANS CABINET	20
21							5.8	3.7			40 A	3	3#8+#10G -3/4"C	CONVECTION OVEN	22
23	CONVECTION OVEN	3#8+#10G -3/4"C	3	40 A					3.7	3.7					24
25					3.7	3.7									26
27							3.7	0.7			20 A	2	#12-3/4"C	REC PASS-THRU HEATED CABINET, MOBILE	28
29	+ REC PASS-THRU FRIDGE,...	#12-3/4"C	1	20 A					1.2	0.7					30
31	+ REC BULK MILK COOLER,...	#12-3/4"C	1	20 A	0.8	0.5					20 A	1	#12-3/4"C	+ REC RECEIVING B118	32
33	+ REC ICE CREAM CABINET,...	#12-3/4"C	1	20 A			0.5	0.5			20 A	1	#12-3/4"C	+ REC SERVING LINE B124	34
35	+ FOOD PREP B123	#12-3/4"C	1	20 A					0.4	0.5	20 A	1	#12-3/4"C	+ REC FOOD PREP B123	36
37	+ REC OFFICE B121 DESK	#12-3/4"C	1	20 A	0.4	0.0					20 A	1	--	SPARE	38
39	+ REC FLY FAN	#12-3/4"C	1	20 A			0.2	0.0			20 A	1	--	SPARE	40
41	+ REC RECEIVING B118	#12-3/4"C	1	20 A					0.2	0.0	20 A	1	--	SPARE	42
43	+ SPARE	--	1	20 A	0.0	0.0					20 A	1	--	SPARE	44
45	+ SPARE	--	1	20 A			0.0	0.0			20 A	1	--	SPARE	46
47	+SPARE	--	1	20 A					0.0	0.0	20 A	1	--	SPARE	48
49	+SPARE	--	1	20 A	0.0	0.0					20 A	1	--	SPARE	50
51	+SPARE	--	1	20 A			0.0	0.0			20 A	1	--	SPARE	52
53	+SPARE	--	1	20 A					0.0	0.0	20 A	1	--	SPARE	54
55	SPACE & PROVISION	--	--	--	0.0	0.0					--	--	--	SPACE & PROVISION	56
57	SPACE & PROVISION	--	--	--			0.0	0.0			--	--	--	SPACE & PROVISION	58
59	SPACE & PROVISION	--	--	--					0.0	0.0	--	--	--	SPACE & PROVISION	60
					19.7		21.1		18.0						

CONNECTED LOAD = 58.8 KVA

DEMAND LOAD = 51.2 KVA

MIN AIC RATING = 10,000 AMPS SYMMETRICAL

MAIN BREAKER 225 AMPS

LOCATION SERVING LINE B125

NOTES:
1. + PROVIDE GFCI TYPE CIRCUIT BREAKER.

WIRING PANEL SCHEDULE L1B

480/277 VOLTS — 3 PHASE 4 WIRE — 125 AMP MAINS — SURFACE

CIRCUIT	DESCRIPTION	WIRE/ CONDUIT	POLE	AMP	A	A	B	B	C	C	AMP	POLE	WIRE/ CONDUIT	DESCRIPTION	CIRCUIT
1	LTG - GYM SOUTH	#12-3/4"C	1	20 A	1.6	0.4					20 A	1	#12-3/4"C	LTG - OUTDOOR STORAGE	2
3	LTG - LAVATORY	#10-3/4"C	1	20 A			1.2	0.8			20 A	1	#12-3/4"C	LTG - KITCHEN/RECEIVING	4
5	LTG - PE STOR./RESTROOMS	#10-3/4"C	1	20 A					0.9	1.8	20 A	1	#12-3/4"C	LTG - GYM NORTH	6
7	LTG - PRINCIPAL/NURSE	#10-3/4"C	1	20 A	1.5	1.2					20 A	1	#10-3/4"C	LTG - CAFETERIA	8
9	LTG - CORRIDOR B11	#12-3/4"C	1	20 A			0.2	1.1			20 A	1	#8-3/4"C	LTG - VOCAL/INSTRUMENT	10
11	LIGHTING CONTROLLER	#12-3/4"C	1	20 A					0.2	1.4	20 A	1	NOTE 1	SITE LIGHTING	12
13	SPARE	--	1	20 A	0.0	1.3					20 A	1	NOTE 1	SITE LIGHTING	14
15	SPARE	--	1	20 A			0.0	1.1			20 A	1	NOTE 1	SITE LIGHTING	16
17	SPARE	--	1	20 A					0.0	0.0	20 A	1	--	SPARE	18
19	SPARE	--	1	20 A	0.0	0.0					20 A	1	--	SPARE	20
21	SPACE & PROVISION	--	--	--			0.0	0.0			--	--	--	SPACE & PROVISION	22
23	SPACE & PROVISION	--	--	--					0.0	0.0	--	--	--	SPACE & PROVISION	24
25	SPACE & PROVISION	--	--	--	0.0	0.0					--	--	--	SPACE & PROVISION	26
27	SPACE & PROVISION	--	--	--			0.0	0.0			--	--	--	SPACE & PROVISION	28
29	SPACE & PROVISION	--	--	--					0.0	0.0	--	--	--	SPACE & PROVISION	30
					6.1		4.4		4.3						

CONNECTED LOAD = 14.7 KVA

DEMAND LOAD = 14.7 KVA

MIN AIC RATING = 65,000 AMPS SYMMETRICAL

MAIN BREAKER 100 AMPS

LOCATION ELEC B111

NOTES:
1. PROVIDE #6 WIRING IN CONDUIT TO LIGHT POLES SHOWN ON DRAWING ME-0.1. REFER TO SPECIFIC NOTE 28/ME-0.1.

WIRING PANEL SCHEDULE L1C

480/277 VOLTS — 3 PHASE 4 WIRE — 125 AMP MAINS — SURFACE

CIRCUIT	DESCRIPTION	WIRE/ CONDUIT	POLE	AMP	A	A	B	B	C	C	AMP	POLE	WIRE/ CONDUIT	DESCRIPTION	CIRCUIT
1	LTG - CORRIDOR C WEST	#10-3/4"C	1	20 A	1.2	1.7					20 A	1	#8-3/4"C	LTG - ART/KINDERGARTEN	2
3	LTG - MEDIA/LIBRARIAN		1	20 A			1.2	1.4			20 A	1	#8-3/4"C	LTG - KINDERGARTEN SE	4
5	LTG - CLASSROOM/SERVER	#12-3/4"C	1	20 A					2.4	0.8	20 A	1	#10-3/4"C	LTG - CORRIDOR C EAST	6
7	LTG - CLASSROOMS C SW	#10-3/4"C	1	20 A	1.7	0.4					20 A	1	#8-3/4"C	LTG - CORRIDOR C NORTH	8
9	LTG - FACULTY...	#12-3/4"C	1	20 A			1.6	0.0			20 A	1	--	SPARE	10
11	SPARE	--	1	20 A					0.0	0.0	20 A	1	--	SPARE	12
13	SPARE	--	1	20 A	0.0	0.0					20 A	1	--	SPARE	14
15	SPARE	--	1	20 A			0.0	0.0			20 A	1	--	SPARE	16
17	SPACE & PROVISION	--	--	--					0.0	0.0	--	--	--	SPACE & PROVISION	18
19	SPACE & PROVISION	--	--	--	0.0	0.0					--	--	--	SPACE & PROVISION	20
21	SPACE & PROVISION	--	--	--			0.0	0.0			--	--	--	SPACE & PROVISION	22
23	SPACE & PROVISION	--	--	--					0.0	0.0	--	--	--	SPACE & PROVISION	24
25	XFMR TR1C (SERVING PANEL R1C)	3#3+ #8G- 1 1/4"C	3	90 A	13.0	11.1					90 A	3	3#3+ #8G- 1 1/4"C	XFMR TC1C (SERVING PANEL C1C)	26
27							13.0	10.4							28
29									13.4	10.4					30
					29.0		27.5		27.0						

CONNECTED LOAD = 83.6 KVA

DEMAND LOAD = 55.4 KVA

MIN AIC RATING = 14,000 AMPS SYMMETRICAL

MAIN BREAKER 125 AMPS

LOCATION ELEC. C104

NOTES:

WIRING PANEL SCHEDULE L2C

480/277 VOLTS — 3 PHASE 4 WIRE — 250 AMP MAINS — SURFACE

CIRCUIT	DESCRIPTION	WIRE/ CONDUIT	POLE	AMP	A	A	B	B	C	C	AMP	POLE	WIRE/ CONDUIT	DESCRIPTION	CIRCUIT
1	LTG - RESTROOM/WIRE...	#12-3/4"C	1	20 A	1.9	0.9					20 A	1	#10-3/4"C	LTG - CORRIDOR 2C EAST	2
3	LTG - CORRIDOR 2C WEST	#12-3/4"C	1	20 A			1.8	1.9			20 A	1	#8-3/4"C	LTG - CLASSROOMS 2C NE	4
5	LTG - CLASSROOM 248-254	#12-3/4"C	1	20 A					1.8	1.7	20 A	1	#8-3/4"C	LTG - CLASSROOMS 2C SE	6
7	LTG - CLASSROOM 240-246	#10-3/4"C	1	20 A	1.7	0.9					20 A	1	#8-3/4"C	LTG - CORRIDOR 2C NORTH	8
9	SPARE	--	1	20 A			0.0	0.0			20 A	1	--	SPARE	10
11	SPARE	--	1	20 A					0.0	0.0	20 A	1	--	SPARE	12
13	SPARE	--	1	20 A	0.0	0.0					20 A	1	--	SPARE	14
15	SPARE	--	1	20 A			0.0	0.0			20 A	1	--	SPARE	16
17	SPARE	--	1	20 A					0.0	0.0	20 A	1	--	SPARE	18
19	SPARE	--	1	20 A	0.0	0.0					20 A	1	--	SPARE	20
21	SPARE	--	1	20 A			0.0	0.0			20 A	1	--	SPARE	22
23	SPARE	--	1	20 A					0.0	0.0	20 A	1	--	SPARE	24
25	SPACE & PROVISION	--	--	--	0.0	0.0					--	--	--	SPACE & PROVISION	26
27	SPACE & PROVISION	--	--	--			0.0	0.0			--	--	--	SPACE & PROVISION	28
29	SPACE & PROVISION	--	--	--					0.0	0.0	--	--	--	SPACE & PROVISION	30
31	SPACE & PROVISION	--	--	--	0.0	0.0					--	--	--	SPACE & PROVISION	32
33	SPACE & PROVISION	--	--	--			0.0	0.0			--	--	--	SPACE & PROVISION	34
35	SPACE & PROVISION	--	--	--					0.0	0.0	--	--	--	SPACE & PROVISION	36
37	XFMR TR2C (NOTE 1) (SERVING PANEL R2C)	3#1/0+ #6G- 2"C	3	150 A	19.2	11.4					90 A	3	3#3+ #8G- 1 1/4"C	XFMR TC2C (SERVING PANEL C2C)	38
39							18.8	12.2							40
41									20.7	10.4					42
					36.1		34.8		34.6						

CONNECTED LOAD = 105.5 KVA

DEMAND LOAD = 74.0 KVA

MIN AIC RATING = 14,000 AMPS SYMMETRICAL

MAIN BREAKER 150 AMPS

LOCATION ELEC. C210

NOTES:
1. PROVIDE SUB-FEED CIRCUIT BREAKER.

WIRING PANEL SCHEDULE M1B

480/277 VOLTS — 3 PHASE 4 WIRE — 400 AMP MAINS — SURFACE

CIRCUIT	DESCRIPTION	WIRE/ CONDUIT	POLE	AMP	A	A	B	B	C	C	AMP	POLE	WIRE/ CONDUIT	DESCRIPTION	CIRCUIT
1	WATER HEATER DWH-1	3#10+#10G -3/4"C	3	50 A	10.0	10.0					30 A	3	3#10+#10G -3/4"C	WATER HEATER DWH-2	2
3							10.0	10.0							4
5									10.0	10.0					6
7	GEOTHERMAL PUMP-2	3#4+#8G-1 1/4"C	3	60 A	10.6	10.6					60 A	3	3#4+#8G-1 1/4"C	GEOTHERMAL PUMP-1	8
9							10.6	10.6							10
11									10.6	10.6					12
13	RHPU-2	3#10+#10G -3/4"C	3	25 A	5.8	3.3					20 A	3	#12-3/4"C	ECUH-2	14
15							5.8	3.3							16
17									5.8	3.3					18
19	RHPU-1	3#12+#12G -3/4"C	3	20 A	3.6	3.3					20 A	3	#12-3/4"C	ECUH-1	20
21							3.6	3.3							22
23									3.6	3.3					24
25	EPUH-6	#10-3/4"C	1	25 A	5.0	2.8					15 A	3	#12-3/4"C	WCCU-1A	26
27	EPUH-1	#10-3/4"C	1	25 A			5.0	2.8							28
29	EPUH-3	#10-3/4"C	1	25 A					5.0	2.8					30
31	EPUH-2	#10-3/4"C	1	25 A	5.0	2.8					15 A	3	#12-3/4"C	WCCU-1B	32
33	EPUH-4	#12-3/4"C	1	20 A			3.0	2.8							34
35	SPACE & PROVISION	--	--	--					0.0	2.8					36
37	SPACE & PROVISION	--	--	--	0.0	5.0					25 A	1	#10-3/4"C	EPUH-5	38
39	SPACE & PROVISION	--	--	--			0.0	0.0			--	--	--	SPACE & PROVISION	40
41	SPACE & PROVISION	--	--	--					0.0	0.0	--	--	--	SPACE & PROVISION	42
43	SPACE & PROVISION	--	--	--	0.0	0.0					--	--	--	SPACE & PROVISION	44
45	SPACE & PROVISION	--	--	--			0.0	0.0			--	--	--	SPACE & PROVISION	46
47	SPACE & PROVISION	--	--	--					0.0	0.0	--	--	--	SPACE & PROVISION	48
49	SPACE & PROVISION	--	--	--	0.0	0.0					--	--	--	SPACE & PROVISION	50
51	SPACE & PROVISION	--	--	--			0.0	0.0			--	--	--	SPACE & PROVISION	52
53	SPACE & PROVISION	--	--	--					0.0	0.0	--	--	--	SPACE & PROVISION	54
55	SPACE & PROVISION	--	--	--	0.0	0.0					--	--	--	SPACE & PROVISION	56
57	SPACE & PROVISION	--	--	--			0.0	0.0			--	--	--	SPACE & PROVISION	58
59	SPACE & PROVISION	--	--	--					0.0	0.0	--	--	--	SPACE & PROVISION	60
61	SPACE & PROVISION	--	--	--	0.0	0.0					--	--	--	SPACE & PROVISION	62
63	SPACE & PROVISION	--	--	--			0.0	0.0			--	--	--	SPACE & PROVISION	64
65	SPACE & PROVISION	--	--	--					0.0	0.0	--	--	--	SPACE & PROVISION	66
					78.0		71.0		68.0						

CONNECTED LOAD = 217.0 KVA

DEMAND LOAD = 217.0 KVA

MIN AIC RATING = 14,000 AMPS SYMMETRICAL

MAIN BREAKER 400 AMPS

LOCATION MECH. B110

NOTES:

WIRING PANEL SCHEDULE M1C (TWO SECTION)

480/277 VOLTS — 3 PHASE 4 WIRE — 400 AMP MAINS — SURFACE

CIRCUIT	DESCRIPTION	WIRE/ CONDUIT	POLE	AMP	A	A	B	B	C	C	AMP	POLE	WIRE/ CONDUIT	DESCRIPTION	CIRCUIT
1	HPU-20	3#12+#12G -3/4"C	3	15 A	3.1	3.1					15 A	3	3#12+#12G -3/4"C	HPU-19	2
3							3.1	3.1							4
5									3.1	3.1					6
7	HPU-17	#10-3/4"C	1	20 A	4.7	4.7					20 A	1	#10-3/4"C	HPU-16	8
9	HPU-15	#10-3/4"C	1	20 A			4.7	3.7			15 A	3	3#12+#12G -3/4"C	HPU-13B	10
11	HPU-13A	3#12+#12G -3/4"C	3	15 A					3.7	3.7					12
13					3.7	3.7									14
15							3.7	3.1			15 A	3	3#12+#12G -3/4"C	HPU-9	16
17	HPU-11	#12-3/4"C	1	20 A					3.9	3.1					18
19	HPU-14	#12-3/4"C	1	20 A	3.9	3.1									20
21	HPU-12	#10-3/4"C	1	25 A			4.7	10.8			15 A	1	#12-3/4"C	HPU-06	22
23	HPU-10	#12-3/4"C	1	20 A					3.9	4.7	25 A	1	#10-3/4"C	HPU-05	24
25	ECUH-3	3#12+#12G -3/4"C	3	20 A	3.6	3.6					20 A	3	3#12+#12G -3/4"C	ECUH-4	26
27							3.6	3.6							28
29									3.6	3.6					30
31	ECUH-5	3#12+#12G -3/4"C	3	20 A	3.6	3.6					20 A	3	3#12+#12G -3/4"C	ECUH-7	32
33							3.6	3.6							34
35									3.6	3.6					36
37	ECUH-9	3#12+#12G -3/4"C	3	20 A	3.3	3.6					20 A	3	3#12+#12G -3/4"C	ECUH-6	38
39							3.3	3.6							40
41									3.3	3.6					42
43	ECUH-8	3#12+#12G -3/4"C	3	20 A	3.3	0.0					--	--	--	SPACE & PROVISION	44
45							3.3	0.0			--	--	--	SPACE & PROVISION	46
47									3.3	0.0	--	--	--	SPACE & PROVISION	48
49	SPACE & PROVISION	--	--	--	0.0	0.0					--	--	--	SPACE & PROVISION	50
51	SPACE & PROVISION	--	--	--			0.0	0.0			--	--	--	SPACE & PROVISION	52
53	SPACE & PROVISION	--	--	--					0.0	0.0	--	--	--	SPACE & PROVISION	54
55	SPACE & PROVISION	--	--	--	0.0	0.0					--	--	--	SPACE & PROVISION	56
57	SPACE & PROVISION	--	--	--			0.0	0.0			--	--	--	SPACE & PROVISION	58
59	SPACE & PROVISION	--	--	--					0.0	0.0	--	--	--	SPACE & PROVISION	60
					54.6		61.5		53.8						

CONNECTED LOAD = 169.9 KVA

DEMAND LOAD = 169.9 KVA

MIN AIC RATING = 14,000 AMPS SYMMETRICAL

MAIN BREAKER 350 AMPS

LOCATION ELEC. C104

NOTES:

WIRING SCHEDULE DISTRIBUTION PANELBOARD M2B

480/277 VOLTS — 800 AMP MAIN BUS — SURFACE

3 PHASE 4 WIRE — 600 AMP MAIN BREAKER — 35,000 AIC RATING

FEEDER	EQUIPMENT SERVED	FEEDER SIZE	FRAME	POLE	AMP	A	B	C	NOTES
1	DOAS-1	3#1+#6G 2-1/2"C	250 A	3	125 A	34.1	34.1	34.1	
2	DOAS-2	3#1+#6G 2-1/2"C	250 A	3	125 A	34.1	34.1	34.1	
3	DOAS-3	3#8+#10G 3/4"C	100 A	3	45 A	9.4	9.4	9.4	
4	ERU-1	3#4+#8G 1-1/4"C	100 A	3	80 A	16.3	16.3	16.3	
5	ERU-2	3#6+#10G 1"C	100 A	3	60 A	16.4	16.4	16.4	
6	HPU-01	3#12+#12G-3/4"C	100 A	3	20 A	4.4	4.4	4.4	
7	HPU-02	3#12+#12G-3/4"C	100 A	3	15 A	3.7	3.7	3.7	
8	SPARE	--	100 A	3	0 A	0.0	0.0	0.0	
9	SPARE	--	100 A	3	0 A	0.0	0.0	0.0	
10	SPACE AND PROVISION	--	250 A	3	0 A	0.0	0.0	0.0	
11	SPACE AND PROVISION	--	250 A	3	0 A	0.0	0.0	0.0	
12	SPACE AND PROVISION	--	250 A	3	0 A	0.0	0.0	0.0	
13	SPACE AND PROVISION	--	250 A	3	0 A	0.0	0.0	0.0	
14	SPACE AND PROVISION	--	250 A	3	0 A	0.0	0.0	0.0	
						118.4	118.4	118.4	

CONNECTED LOAD = 355.3 kVA

DEMAND LOAD = 355.3 kVA

LOCATION MECHANICAL B200

DISTRIBUTION PANELBOARD NOTES:

WIRING PANEL SCHEDULE M2C (TWO SECTION)

480/277 VOLTS — 3 PHASE 4 WIRE — 400 AMP MAINS — SURFACE

CIRCUIT	DESCRIPTION	WIRE/ CONDUIT	POLE	AMP	A	A	B	B	C	C	AMP	POLE	WIRE/ CONDUIT	DESCRIPTION	CIRCUIT
1	HPU-44	#10-3/4"C	1	20 A	4.7	4.7					20 A	1	#10-3/4"C	HPU-22	2
3	HPU-21	3#12+#12G -3/4"C	3	20 A			3.1	3.1			20 A	3	3#12+#12G -3/4"C	HPU-43	4
5									3.1	3.1					6
7					3.1	3.1									8
9	EPUH-7	#10-3/4"C	1	25 A			5.0	4.7			20 A	1	#10-3/4"C	HPU-41	10
11	HPU-40	3#12+#12G -3/4"C	3	15 A					3.6	4.7	20 A	1	#10-3/4"C	HPU-8	12
13					3.6	4.7					20 A	1	#10-3/4"C	HPU-3	14
15							3.6	3.6			15 A	3	3#12+#12G -3/4"C	HPU-39	16
17	HPU-38	#10-3/4"C	1	20 A					4.7	3.6					18
19	HPU-18	#10-3/4"C	1	20 A	4.7	3.6									20
21	HPU-37	3#12+#12G -3/4"C	3	15 A			3.1	3.7			15 A	3	3#12+#12G -3/4"C	HPU-3	22
23									3.1	3.7					24
25					3.1	3.7									26
27	HPU-34	#12-3/4"C	1	15 A			3.9	7.2			60 A	3	3#6+10G -3/4"C	ELEVATOR	28
29	HPU-33	3#12+#12G -3/4"C	3	15 A					3.1	7.2					30
31					3.1	7.2									32
33							3.1	4.7			20 A	1	#10-3/4"C	HPU-28	34
35	HPU-24	#12-3/4"C	1	20 A					3.9	3.9	20 A	1	#12-3/4"C	HPU-35	36
37	HPU-25	#10-3/4"C	1	20 A	3.9	3.9					20 A	1	#12-3/4"C	HPU-36	38
39	HPU-26	#12-3/4"C	1	20 A			4.7	3.9			20 A	1	#12-3/4"C	HPU-31	40
41	HPU-7	#10-3/4"C	1	20 A					4.7	4.7	25 A	1	#10-3/4"C	HPU-32	42
43	HPU-29	#10-3/4"C	1	20 A	4.7	4.7					20 A	1	#10-3/4"C	HPU-23	44
45	HPU-27	#10-3/4"C	1	20 A			4.7	4.7			20 A	1	#10-3/4"C	HPU-4	46
47	HPU-9	3#12+#12G -3/4"C	3	15 A					3.1	3.1	20 A	3	3#12+#12G -3/4"C	HPU-42	48
49					3.1	3.1									50
51							3.1	3.1							52
53	EPUH-8	#10-3/4"C	1	25 A					5.0	3.0	20 A	1	#12-3/4"C	EPUH-9	54
55	EPUH-10	#12-3/4"C	1	20 A	3.0	3.0					20 A	1	#12-3/4"C	EPUH-11	56
57	SPARE	--	3	15 A			0.0	3.0			20 A	1	#12-3/4"C	EPUH-12	58
59									0.0	2.8	15 A	3	#12-3/4"C	MECH. C206	60
61					0.0	2.8									62
63	SPARE	--	1	15 A			0.0	2.8							64
65	SPARE	--	1	15 A					0.0	0.0	20 A	1	--	SPARE	66
67	SPARE	--	1	20 A	0.0	0.0					30 A	1	--	SPARE	68
69	SPARE	--	1	20 A			0.0	0.0			30 A	1	--	SPARE	70
71	SPARE	--	1	25 A					0.0	0.0	30 A	1	--	SPARE	72
73	SPARE	--	1	25 A	0.0	0.0					30 A	1	--	SPARE	74
75	SPACE & PROVISION	--	--	--			0.0	0.0			--	--	--	SPACE & PROVISION	76
77	SPACE & PROVISION	--	--	--					0.0	0.0	--	--	--	SPACE & PROVISION	78
79	SPACE & PROVISION	--	--	--	0.0	0.0					--	--	--	SPACE & PROVISION	80
81	SPACE & PROVISION	--	--	--			0.0	0.0			--	--	--	SPACE & PROVISION	82
83	SPACE & PROVISION	--	--	--					0.0	0.0	--	--	--	SPACE & PROVISION	84
					81.6		78.8		74.1						

CONNECTED LOAD = 234.5 KVA

DEMAND LOAD = 234.5 KVA

MIN AIC RATING = 35,000 AMPS SYMMETRICAL

MAIN BREAKER 400 AMPS

LOCATION ELEC. C210

NOTES:

SCHEDULE KEY

K	L2C	M2B
L1B	M1B	M2C
L1C	M1C	

James Posey Associates
Engineering Your Vision
Mechanical & Electrical Engineers
jamesposey.com
3112 Lord Baltimore Drive
Baltimore, MD 21244
tel 410-265-6100
fax 410-298-9820

Professional Certification. I hereby certify that these documents were prepared or approved by me, and that I am a duly licensed professional engineer under the laws of the State of Maryland, License No. 24861, Expiration date: 02-24-2018.

JPA PROJECT NO. 6542-15

11720 Beltsville Drive
Suite 600
Calverton, MD 20705
Tel: 301.595.1000
www.grimmandparker.com
G+P GRIMM AND PARKER

GP #21541

SCHEDULES

LANSDOWNE ELEMENTARY SCHOOL
2301 ALMA ROAD, BALTIMORE, MD

DATE	DESCRIPTION
10/7/16	ADD NO.1

E-6.4

11/17/16
BID SET

© GRIMM AND PARKER, P.C. 2014
© 2016 James Posey Associates, Inc.

© GRIMM AND PARKER, P.C. 2014

WIRING PANEL SCHEDULE PR

120/208 VOLTS | 3 PHASE 4 WIRE | 100 AMP MAINS | SURFACE

CIRCUIT	DESCRIPTION	WIRE/ CONDUIT	POLE	AMP	A	A	B	B	C	C	AMP	POLE	WIRE/ CONDUIT	DESCRIPTION	CIRCUIT
1	REC COMMUNITY ACTIVITY...	#12-3/4"C	1	20 A	0.5	0.9					20 A	1	#12-3/4"C	REC COMMUNITY CONDIME...	2
3	REC OFFICE A126	#12-3/4"C	1	20 A			0.7	0.2			20 A	1	#12-3/4"C	+ REC EWC CORRIDOR A13	4
5	REC COMMUNITY CONDIME...	#12-3/4"c	1	20 A					0.4	0.2	20 A	1	#12-3/4"C	REC - REFRIG AREA A A130	6
7	SPARE	--	1	20 A	0.0	0.0					20 A	1	--	SPARE	8
9	SPARE	--	1	20 A			0.0	0.0			20 A	1	--	SPARE	10
11	SPARE	--	1	20 A					0.0	0.0	20 A	1	--	SPARE	12
13	SPARE	--	1	20 A	0.0	0.0					20 A	1	--	SPARE	14
15	SPARE	--	1	20 A			0.0	0.0			20 A	1	--	SPARE	16
17	SPARE	--	1	20 A					0.0	0.0	20 A	1	--	SPARE	18
19	SPACE & PROVISION	--	--	--	0.0	0.0					--	--	--	SPACE & PROVISION	20
21	SPACE & PROVISION	--	--	--			0.0	0.0			--	--	--	SPACE & PROVISION	22
23	SPACE & PROVISION	--	--	--					0.0	0.0	--	--	--	SPACE & PROVISION	24
25	SPACE & PROVISION	--	--	--	0.0	0.0					--	--	--	SPACE & PROVISION	26
27	SPACE & PROVISION	--	--	--			0.0	0.0			--	--	--	SPACE & PROVISION	28
29	SPACE & PROVISION	--	--	--					0.0	0.0	--	--	--	SPACE & PROVISION	30
					1.4		0.9		0.5						

CONNECTED LOAD = 2.9 KVA
DEMAND LOAD = 2.9 KVA
MIN AIC RATING = 10,000 AMPS SYMMETRICAL
MAIN BREAKER 100 AMPS
LOCATION COMMUNITY ACTIVITY ROOM A125

NOTES:
1. + PROVIDE GFCI TYPE CIRCUIT BREAKER

WIRING SCHEDULE DISTRIBUTION PANELBOARD RD1

120/208 VOLTS | 600 AMP MAIN BUS | SURFACE
3 PHASE 4 WIRE | 400 AMP MAIN BREAKER | 10,000 AIC RATING

FEEDER	EQUIPMENT SERVED	FEEDER SIZE	FRAME	POLE	AMP	A	B	C	NOTES
1	PANEL K	4 #4/0 + #4G - 3"C	250 A	3	225 A	19.7	21.1	18.0	
2	PANEL R1B	4 #3 + #8G - 1 1/4"C	250 A	3	100 A	10.5	13.1	11.9	
3	PANEL PR	4 #3 + #8G - 1 1/4"C	250 A	3	100 A	1.4	0.9	0.5	
4	PANEL R1A	4 #3 + #8G - 1 1/4"C	250 A	3	100 A	7.0	5.3	4.3	
5	DIMMER PANEL PLATFORM B127	4 #3 + #8G - 1 1/4"C	250 A	3	100 A	1.1	1.1	1.1	
6	SPACE AND PROVISION	--	250 A	3	0 A	0.0	0.0	0.0	
7	SPACE AND PROVISON	--	250 A	3	0 A	0.0	0.0	0.0	
8	SPACE AND PROVISION	--	250 A	3	0 A	0.0	0.0	0.0	
9	SPACE AND PROVISION	--	250 A	3	0 A	0.0	0.0	0.0	
10	SPACE AND PROVISION	--	250 A	3	0 A	0.0	0.0	0.0	
						39.7	41.5	35.8	

CONNECTED LOAD = 117.0 kVA
DEMAND LOAD = 98.6 kVA
LOCATION ELEC B111

DISTRIBUTION PANELBOARD NOTES:
1. FEEDER SIZE ADJUSTED FOR VOLTAGE DROP.

WIRING PANEL SCHEDULE R1A

120/208 VOLTS | 3 PHASE 4 WIRE | 100 AMP MAINS | RECESSED

CIRCUIT	DESCRIPTION	WIRE/ CONDUIT	POLE	AMP	A	A	B	B	C	C	AMP	POLE	WIRE/ CONDUIT	DESCRIPTION	CIRCUIT
1	VRT-11,12,13,14,15,16,17	#12-3/4"C	2	20 A	0.8	0.8					20 A	2	#12-3/4"C	VRT-6,7,8,9,10,18	2
3							0.8	0.8							4
5	REC CONFERENCE A104	#10-3/4"C	1	20 A					0.7	0.5	20 A	1	#10-3/4"C	REC ASST. PRINCIPAL A103	6
7	REC CORRIDOR A10	#12-3/4"C	1	20 A	0.9	1.1					20 A	1	#12-3/4"C	REC TREATMENT/ MED. A120	8
9	REC EXAMINATION A123	#10-3/4"C	1	20 A			0.7	0.7			20 A	1	#10-3/4"C	REC SECRETARY AREA A102	10
11	REC RESTING AREA A122	#10-3/4"C	1	20 A					0.9	0.7	20 A	1	#12-3/4"C	REC CORRIDOR A12	12
13	REC GUIDANCE A112	#12-3/4"C	1	20 A	0.9	0.7					20 A	1	#12-3/4"C	REC SW/PSYCH OFF A110	14
15	VRT-1,2,3,4,5	#12-3/4"C	2	20 A			0.4	0.7			20 A	1	#12-3/4"C	REC ASST. PRINCIPAL A109	16
17									0.4	0.9	20 A	1	#12-3/4"C	REC PRINCIPAL A105	18
19	EF-11	#12-3/4"C	1	20 A	0.7	0.4					20 A	1	#12-3/4"C	EF-16	20
21	EF-12	#12-3/4"C	1	20 A			0.9	0.2			20 A	1	#12-3/4"C	EWH-1	22
23	EWH-2	#12-3/4"C	1	20 A					0.2	0.0	20 A	1	--	SPARE	24
25	REC SW/PSYCH OFF A111	#12-3/4"C	1	20 A	0.7	0.0					20 A	1	--	SPARE	26
27	REC WORK/RECORDS A106		1	20 A			0.2	0.0			20 A	1	--	SPARE	28
29	SPARE	--	1	20 A					0.0	0.0	20 A	1	--	SPARE	30
31	SPARE	--	1	20 A	0.0	0.0					20 A	1	--	SPARE	32
33	SPARE	--	1	20 A			0.0	0.0			20 A	1	--	SPARE	34
35	SPACE & PROVISION	--	--	--					0.0	0.0	20 A	1	--	SPARE	36
37	SPACE & PROVISION	--	--	--	0.0	0.0					--	--	--	SPACE & PROVISION	38
39	SPACE & PROVISION	--	--	--			0.0	0.0			--	--	--	SPACE & PROVISION	40
41	SPACE & PROVISION	--	--	--					0.0	0.0	--	--	--	SPACE & PROVISION	42
					7.0		5.3		4.3						

CONNECTED LOAD = 16.6 KVA
DEMAND LOAD = 16.4 KVA
MIN AIC RATING = 10,000 AMPS SYMMETRICAL
MAIN BREAKER 100 AMPS
LOCATION CORRIDOR A10

NOTES:

WIRING PANEL SCHEDULE R1B (TWO SECTION)

120/208 VOLTS | 3 PHASE 4 WIRE | 100 AMP MAINS | SURFACE

CIRCUIT	DESCRIPTION	WIRE/ CONDUIT	POLE	AMP	A	A	B	B	C	C	AMP	POLE	WIRE/ CONDUIT	DESCRIPTION	CIRCUIT
1	REC CORRIDOR A14	#10-3/4"C	1	20 A	0.9	0.2					20 A	1	#10-3/4"C	+ REC EWC CORRIDOR A14	2
3	REC CORRIDOR A14	#10-3/4"C	1	20 A			1.4	0.9			20 A	1	#12-3/4"C	REC PE - STORAGE B130	4
5	REC BLDG SERVICES B108	#12-3/4"C	1	20 A					0.7	0.9	20 A	1	#12-3/4"C	REC PE INST OFFICE B131	6
7	REC RECEIVING B109	#12-3/4"C	1	20 A	0.7	0.7					20 A	1	#12-3/4"C	REC GYMNASIUM B129	8
9	REC GYMNASIUM B129	#12-3/4"C	1	20 A			0.7	1.3			20 A	1	#12-3/4"C	REC CAFETERIA B128	10
11	REC PLATFORM B127	#10-3/4"C	1	20 A					0.7	1.1	20 A	1	#8-3/4"C	REC CLASSROOM B133	12
13	REC CLASSROOM B135	#8-3/4"C	1	20 A	0.9	0.9					20 A	1	#8-3/4"C	REC STORAGE/ LIBRARY B136	14
15	TRAP PRIMER MECH. B110	#12-3/4"C	1	20 A			0.2	0.0			20 A	1	#12-3/4"C	MECH. B110	16
17	TRAP PRIMER MECH. B110	#12-3/4"C	1	20 A					0.0	0.4	20 A	1	#12-3/4"C	EF-1	18
19	REC OFFICE B121	#12-3/4"C	1	20 A	0.5	0.4					20 A	1	#12-3/4"C	EF-3	20
21	REC OFFICE B121 DESK	#12-3/4"C	1	20 A			0.4	0.4			20 A	1	#12-3/4"C	EF-4	22
23	REC LOCKER B115	#12-3/4"C	1	20 A					0.5	0.4	20 A	1	#12-3/4"C	EF-5	24
25	EF-6A	#12-3/4"C	1	20 A	0.7	0.7					20 A	1	#12-3/4"C	EF-6B	26
27	EF-7	#12-3/4"C	1	20 A			0.4	0.4			20 A	1	#12-3/4"C	EF-8	28
29	EF-9	#12-3/4"C	1	20 A					0.7	0.7	20 A	1	#12-3/4"C	EF-2	30
31	EWH-3	#12-3/4"C	1	20 A	0.2	0.2					20 A	1	#12-3/4"C	EWH-4	32
33	EWH-5	#12-3/4"C	1	20 A			0.2	0.2			20 A	1	#12-3/4"C	EWH-6	34
35	LTG - SCHOOL SIGN	#8-1"C	1	20 A					0.2	0.2	20 A	1	#12-3/4"C	GYMNASIUM B129	36
37	LTG - SCHOOL SIGN	#8-1"C	1	20 A	0.2	0.2					20 A	1	#12-3/4"C	GYMNASIUM B129	38
39	EF-18	#12-3/4"C	1	20 A			0.4	0.2			20 A	1	#12-3/4"C	GYMNASIUM B129	40
41	REC STOR B112	#12-3/4"C	1	20 A					0.7	0.2	20 A	1	#12-3/4"C	GYMNASIUM B129	42
43	+ REC EWC CAFETERIA B128	#12-3/4"C	1	20 A	0.2	0.2					20 A	1	#12-3/4"C	GYMNASIUM B129	44
45	REC MECH. B110	#12-3/4"C	1	20 A			0.9	0.2			20 A	1	#12-3/4"C	GYMNASIUM B129	46
47	REC ELEC B111	#12-3/4"C	1	20 A					0.5	0.2	20 A	1	#12-3/4"C	ADA LIFT B137	48
49	REC	#12-3/4"C	1	20 A	0.2	0.4					20 A	1	#12-3/4"C	TRAP PRIMERS C106 AND...	50
51	DSS-1	#12-3/4"C	2	20 A			1.4	1.4			20 A	2	#12-3/4"C	DSS-5	52
53									1.4	1.4					54
55	DSS-7	#12_3/4"C	2	20 A	1.4	0.8					15 A	3	3#12+#12G -3/4"C	MOTORIZED PARTITION	56
57							1.4	0.8							58
59	LIGHTING CONTROLLER	#12-3/4"C	1	20 A					0.2	0.8					60
61	SPARE	--	1	20 A	0.0	0.0					0 A	1	--	SPARE	62
63	SPARE	--	1	20 A			0.0	0.0			20 A	1	--	SPARE	64
65	SPARE	--	1	20 A					0.0	0.0	20 A	1	--	SPARE	66
67	SPARE	--	1	20 A	0.0	0.0					20 A	1	--	SPARE	68
69	SPARE	--	1	20 A			0.0	0.0			20 A	1	--	SPARE	70
71	SPARE	--	1	20 A					0.0	0.0	20 A	1	--	SPARE	72
73	SPARE	--	1	20 A	0.0	0.0					20 A	1	--	SPARE	74
75	SPARE	--	1	20 A			0.0	0.0			20 A	1	--	SPARE	76
77	SPARE	--	1	20 A					0.0	0.0	20 A	1	--	SPARE	78
79	SPARE	--	1	20 A	0.0	0.0					20 A	1	--	SPARE	80
81	SPARE	--	1	20 A			0.0	0.0			20 A	1	--	SPARE	82
83	SPARE	--	1	20 A					0.0	0.0	20 A	1	--	SPARE	84
					10.5		13.1		11.9						

CONNECTED LOAD = 35.4 KVA
DEMAND LOAD = 32.4 KVA
MIN AIC RATING = 10,000 AMPS SYMMETRICAL
MAIN BREAKER 100 AMPS
LOCATION ELEC B111

NOTES:
1. + PROVIDE GFCI TYPE CIRCUIT BREAKER

WIRING PANEL SCHEDULE R1C (TWO SECTION)

120/208 VOLTS | 3 PHASE 4 WIRE | 225 AMP MAINS | SURFACE

CIRCUIT	DESCRIPTION	WIRE/ CONDUIT	POLE	AMP	A	A	B	B	C	C	AMP	POLE	WIRE/ CONDUIT	DESCRIPTION	CIRCUIT
1	REC FACULTY DINING C165	#12-3/4"C	1	20 A	1.1	0.7					20 A	1	#12-3/4"C	REC FACULTY LOUNGE C162	2
3	REC ESOL RESOURCE C161	#12-3/4"C	1	20 A			0.9	1.1			20 A	1	#12-3/4"C	REC REMEDIAL READ C159	4
5	REC E.L.A. C158	#12-3/4"C	1	20 A					0.5	1.1	20 A	1	#12-3/4"C	REC CLASSROOM C156	6
7	REC CLASSROOM C152	#12-3/4"C	1	20 A	1.1	0.5					20 A	1	#12-3/4"C	REC E.L.A. C151	8
9	REC CLASSROOM C149	#10-3/4"C	1	20 A			1.1	1.3			20 A	1	#8-3/4"C	REC CLASSROOM C147	10
11	REC E.L.A. C146	#10-3/4"C	1	20 A					0.5	1.1	20 A	1	#8-3/4"C	REC CLASSROOM C144	12
13	REC CORRIDOR C14	#12-3/4"C	1	20 A	1.1	1.3					20 A	1	#12-3/4"C	REC CORRIDOR C14	14
15	REC MEDIA C100		1	20 A			0.7	0.7			20 A	1	#12-3/4"C	REC MEDIA C100	16
17	REC MEDIA C100	#10-3/4"C	1	20 A					1.1	1.3	20 A	1	#12-3/4"C	REC DIG LEARNING AREA...	18
19	REC DISPLAY CASE	#12-3/4"C	1	20 A	0.7	1.1					20 A	1	#12-3/4"C	REC STUDIO C107	20
21	REC CONTROL ROOM C108	#12-3/4"C	1	20 A			1.1	0.7			20 A	1	#12-3/4"C	REC LIBRARIAN OFFICE C109	22
23	REC LIBRARIAN OFFICE C109	#12-3/4"C	2	20 A					0.1	1.1	20 A	1	#12-3/4"C	REC STORAGE C141	24
25					0.1	0.9					20 A	1	#12-3/4"C	REC PRE-K CLASSROOM C135	26
27	REC STORAGE C133	#10-3/4"C	1	20 A			0.9	0.9			20 A	1	#8-3/4"C	REC ART CLASSROOM C111	28
29	REC CORRIDOR C12	#10-3/4"C	1	20 A					1.6	0.9	20 A	1	#8-3/4"C	REC KINDERGARTEN C113	30
31	REC STORAGE C118	#10-3/4"C	1	20 A	0.9	0.7					20 A	1	#8-3/4"C	REC C119	32
33	REC KINDERGARTEN C120	#8-3/4"C	1	20 A			0.9	0.7			20 A	1	#8-3/4"C	REC KINDERGARTEN C124	34
35	REC STORAGE C128	#8-3/4"C	1	20 A					0.9	0.1	20 A	2	#10-3/4"C	REC WORKROOM/ STORAGE/ KILN C112	36
37	REC VESTIBULE C10	#12-3/4"C	1	20 A	1.1	0.1									38
39	REC MAKER SPACE C102	#12-3/4"C	1	20 A			0.4	0.4			20 A	1	#12-3/4"C	REC MAKER SPACE C102	40
41	REC MAKER SPACE C102	#12-3/4"C	1	20 A					0.2	0.1	20 A	1	#12-3/4"C	SMOKE DAMPER	42
43	REC CORRIDOR C11	#12-3/4"C	1	20 A	0.5	0.4					20 A	1	#12-3/4"C	COURTYARD RECEPT	44
45	+REC - EWC CORRIDOR C14	#12-3/4"C	1	20 A			0.2	0.2			20 A	1	#12-3/4"C	+REC - EWC CORRIDOR C12	46
47	LTG - MEDIA STUDIO	#12-3/4"C	1	20 A					0.7	1.5	20 A	1	#12-3/4"C	EWH-7	48
49	TRAP PRIMER C131/C138	#12-3/4"C	1	20 A	0.2	0.4					15 A	2	#12-3/4"C	VRT UNITS	50
51	DISHWASHER C165	#12-3/4"C	1	20 A			0.4	0.4							52
53	FACULTY DINING C165	#12-3/4"C	1	20 A					0.5	0.0	20 A	1	--	SPARE	54
55	VENDING DINING C165	#12-3/4"C	1	20 A	0.2	0.0					--	--	--	SPACE & PROVISION	56
57	VENDING DINING C165	#12-3/4"C	1	20 A			0.2	0.0			--	--	--	SPACE & PROVISION	58
59	COPIER FACULTY DINING...	#12-3/4"C	1	20 A					0.2	0.0	--	--	--	SPACE & PROVISION	60
61	SPARE	--	1	20 A	0.0	0.0					--	--	--	SPACE & PROVISION	62
63	SPARE	--	1	20 A			0.0	0.0			--	--	--	SPACE & PROVISION	64
65	SPARE	--	1	20 A					0.0	0.0	--	--	--	SPACE & PROVISION	66
67	SPARE	--	1	20 A	0.0	0.0					--	--	--	SPACE & PROVISION	68
69	SPACE & PROVISION	--	--	--			0.0	0.0			--	--	--	SPACE & PROVISION	70
71	SPACE & PROVISION	--	--	--					0.0	0.0	--	--	--	SPACE & PROVISION	72
73	SPACE & PROVISION	--	--	--	0.0	0.0					--	--	--	SPACE & PROVISION	74
75	SPACE & PROVISION	--	--	--			0.0	0.0			--	--	--	SPACE & PROVISION	76
77	SPACE & PROVISION	--	--	--					0.0	0.0	--	--	--	SPACE & PROVISION	78
79	SPACE & PROVISION	--	--	--	0.0	0.0					--	--	--	SPACE & PROVISION	80
81	SPACE & PROVISION	--	--	--			0.0	0.0			--	--	--	SPACE & PROVISION	82
83	SPACE & PROVISION	--	--	--					0.0	0.0	--	--	--	SPACE & PROVISION	84
					13.0		13.0		13.4						

CONNECTED LOAD = 39.5 KVA
DEMAND LOAD = 27.2 KVA
MIN AIC RATING = 10,000 AMPS SYMMETRICAL
MAIN BREAKER 150 AMPS
LOCATION CORRIDOR C13

NOTES:
1. + PROVIDE GFCI TYPE CIRCUIT BREAKER

WIRING PANEL SCHEDULE R2C (THREE SECTION)

120/208 VOLTS | 3 PHASE 4 WIRE | 225 AMP MAINS | SURFACE

CIRCUIT	DESCRIPTION	WIRE/ CONDUIT	POLE	AMP	A	A	B	B	C	C	AMP	POLE	WIRE/ CONDUIT	DESCRIPTION	CIRCUIT
1	REC CLASSROOM C254	#12-3/4"C	1	20 A	0.5	0.5					20 A	1	#12-3/4"C	REC CLASSROOM C254	2
3	REC E.L.A. C253	#12-3/4"C	1	20 A			1.1	0.5			20 A	1	#12-3/4"C	REC CLASSROOM C252	4
5	REC CLASSROOM C250	#12-3/4"C	1	20 A					0.5	0.5	20 A	1	#12-3/4"C	REC CLASSROOM C250	6
7	REC E.L.A. C249	#12-3/4"C	1	20 A	1.1	0.5					20 A	1	#12-3/4"C	REC CLASSROOM C248	8
9	REC STORAGE C247	#12-3/4"C	1	20 A			0.9	0.5			20 A	1	#12-3/4"C	REC CLASSROOM C246	10
11	REC CLASSROOM C246	#12-3/4"C	1	20 A					0.5	1.1	20 A	1	#10-3/4"C	REC E.L.A. C245	12
13	REC CLASSROOM C244	#10-3/4"C	1	20 A	0.5	0.5					20 A	1	#8-3/4"C	REC CLASSROOM C242	14
15	REC CLASSROOM C242	#8-3/4"C	1	20 A			0.5	1.1			20 A	1	#8-3/4"C	REC E.L.A. C241	16
17	REC CLASSROOM C240	#8-3/4"C	1	20 A					0.5	1.4	20 A	1	#12-3/4"C	REC CORRIDOR C20	18
19	REC CORRIDOR C20	#12-3/4"C	1	20 A	0.9	0.7					20 A	1	#12-3/4"C	REC SPECIAL ED. C215	20
21	REC E.L.A. C214	#12-3/4"C	1	20 A			0.5	0.9			20 A	1	#12-3/4"C	REC CLASSROOM C212	22
23	REC E.L.A. C201	#12-3/4"C	1	20 A					0.9	0.9	20 A	1	#12-3/4"C	REC WORKROOM C207	24
25	REC CLASSROOM C238	#12-3/4"C	1	20 A	1.3	1.3					20 A	1	#12-3/4"C	REC CLASSROOM C232	26
27	REC CLASSROOM C200	#12-3/4"C	1	20 A			0.9	0.9			20 A	1	#12-3/4"C	REC STORAGE C202	28
29	REC CORRIDOR C22	#10-3/4"C	1	20 A					0.9	0.2	20 A	1	#12-3/4"C	+ REC - EWC CORRIDOR C23	30
31	REC CORRIDOR C22	#10-3/4"C	1	20 A	0.5	1.1					20 A	1	#10-3/4"C	REC CLASSROOM C216	32
33	REC CLASSROOM C216	#10-3/4"C	1	20 A			0.5	0.5			20 A	1	#10-3/4"C	REC CLASSROOM C218	34
35	REC CLASSROOM C218	#10-3/4"C	1	20 A					0.5	1.1	20 A	1	#10-3/4"C	REC CLASSROOM C220	36
37	REC CLASSROOM C220	#10-3/4"C	1	20 A	0.5	0.5					20 A	1	#10-3/4"C	REC CLASSROOM C222	38
39	REC CLASSROOM C222	#10-3/4"C	1	20 A			0.5	0.9			20 A	1	#10-3/4"C	REC GRADE LEVEL STORAG...	40
41	REC CLASSROOM C224	#8-3/4"C	1	20 A					1.1	0.5	20 A	1	#8-3/4"C	REC CLASSROOM C224	42
43	REC CLASSROOM C226	#8-3/4"C	1	20 A	0.5	0.5					20 A	1	#8-3/4"C	REC CLASSROOM C226	44
45	REC CLASSROOM C228	#8-3/4"C	1	20 A			1.1	0.5			20 A	1	#8-3/4"C	REC CLASSROOM C228	46
47	REC CLASSROOM C230	#8-3/4"C	1	20 A					0.5	0.5	20 A	1	#8-3/4"C	REC CLASSROOM C230	48
49	TRAP PRIMER C243	#10-3/4"C	1	20 A	0.2	0.2					20 A	1	#12-3/4"C	TRAP PRIMER C251	50
51	TRAP PRIMER C213	#12-3/4"C	1	20 A			0.2	0.2			20 A	1	#12-3/4"C	TRAP PRIMER C206	52
53	TRAP PRIMER C219	#10-3/4"C	1	20 A					0.2	0.2	20 A	1	#12-3/4"C	TRAP PRIMER C227	54
55	LTS/REC ELEVATOR SHAFT	#10-3/4"C	1	20 A	0.9	0.4					20 A	1	#12-3/4"C	EF-10	56
57	REC EMR C256	#10-3/4"C	1	20 A			0.2	0.7			20 A	1	#12-3/4"C	EF-13	58
59	REC CORRIDOR C21	#12-3/4"C	1	20 A					0.7	0.4	20 A	1	#12-3/4"C	EF-14	60
61	EF-17	#12-3/4"C	1	20 A	0.4	0.4					20 A	1	#12-3/4"C	EF-15	62
63	+ REC - EWC CORRIDOR C23	#12-3/4"C	1	20 A			0.2	0.1			20 A	1	#12-3/4"C	SMOKE DAMPER	64
65	CORRIDOR C23	#12-3/4"C	1	20 A					0.4	1.4	20 A	2	#12-3/4"C	DSS-2	66
67	CORRIDOR C23	#12-3/4"C	1	20 A	0.4	1.4									68
69	REC ELEC. C210	#12-3/4"C	1	20 A			0.4	2.6			40 A	2	#8-3/4"C	DSS-3	70
71	TRAP PRIMER B200	#12-3/4"C	1	20 A					0.2	2.6					72
73	TRAP PRIMER C205	#12-3/4"C	1	20 A	0.2	1.4					20 A	2	#12-3/4"C	DSS-4	74
75	REC REFRIG. STORAGE C247	#12-3/4"C	1	20 A			0.2	1.4							76
77	REC REFRIG. STORAGE C211	#12-3/4"C	1	20 A					0.2	1.4	20 A	2	#12-3/4"C	DSS-6	78
79	REC REFRIG. STORAGE C223	#12-3/4"C	1	20 A	0.2	1.4									80
81	REC REFRIG. STORAGE C202	#12-3/4"C	1	20 A			0.2	0.4			15 A	2	#12-3/4"C	VRT UNITS	82
83	BEHAVIOR SPECIALIST...	#12-3/4"C	1	20 A					0.7	0.4					84
85	SOLAR MONITOR MODULE #1	3#12+#12G -3/4"C	3	20 A	0.1	0.1					20 A	3	3#12+#12G -3/4"C	SOLAR MONITOR MODULE #2	86
87							0.1	0.1							88
89									0.1	0.1					90
91	SOLAR MONITOR MODULE #3	3#12+#12G -3/4"C	3	20 A	0.1	0.1					20 A	3	3#12+#12G -3/4"C	SOLAR MONITOR MODULE #4	92
93							0.1	0.1							94
95									0.1	0.1					96
97	SPARE	--	1	0 A	0.0	0.0					0 A	1	--	SPARE	98
99	SPARE	--	1	0 A			0.0	0.0			0 A	1	--	SPARE	100
101	SPARE	--	1	0 A					0.0	0.0	20 A	1	--	SPARE	102
103	SPARE	--	1	20 A	0.0	0.0					20 A	1	--	SPARE	104
105	SPARE	--	1	20 A			0.0	0.0			20 A	1	--	SPARE	106
107	SPARE	--	1	20 A					0.0	0.0	20 A	1	--	SPARE	108
109	SPARE	--	1	20 A	0.0	0.0					20 A	1	--	SPARE	110
111	SPARE	--	1	20 A			0.0	0.0			20 A	1	--	SPARE	112
113	SPARE	--	1	20 A					0.0	0.0	20 A	1	--	SPARE	114
115	SPARE	--	1	20 A	0.0	0.0					20 A	1	--	SPARE	116
117	SPARE	--	1	20 A			0.0	0.0			20 A	1	--	SPARE	118
119	SPARE	--	1	20 A					0.0	0.0	20 A	1	--	SPARE	120
121	SPARE	--	1	20 A	0.0	0.0					20 A	1	--	SPARE	122
123	SPARE	--	1	20 A			0.0	0.0			20 A	1	--	SPARE	124
125	SPARE	--	1	20 A					0.0	0.0	20 A	1	--	SPARE	126
					19.2		18.8		20.7						

CONNECTED LOAD = 58.8 KVA
DEMAND LOAD = 44.4 KVA
MIN AIC RATING = 10,000 AMPS SYMMETRICAL
MAIN BREAKER 225 AMPS
LOCATION ELEC. C210

NOTES:
1. + PROVIDE GFCI TYPE CIRCUIT BREAKER

SCHEDULE KEY

PR	R1B	R2C
RD1		
R1A	R1C	

James Posey Associates
Engineering Your Vision
Mechanical & Electrical Engineers
jamesposey.com
tel 410-265-6100
fax 410-298-9820
3112 Lord Baltimore Drive
Baltimore, MD 21244

Professional Certification. I hereby certify that these documents were prepared or approved by me, and that I am a duly licensed professional engineer under the laws of the State of Maryland, License No. 24861, Expiration date: 02-24-2018.

JPA PROJECT NO. 6042-15

G+P
GRIMM AND PARKER
11720 Beltsville Drive
Suite 600
Calverton, MD 20705
Tel: 301.595.1000
www.grimmandparker.com

GP #21541

SCHEDULES

LANSDOWNE ELEMENTARY SCHOOL
2301 ALMA ROAD, BALTIMORE, MD

DATE	DESCRIPTION
10/7/16	ADD NO.1

E-6.5
11/17/16
BID SET

© 2016 James Posey Associates, Inc.

LIGHTING FIXTURE SCHEDULE

FIXTURE TYPE	DESCRIPTION	LAMP	MANUFACTURER	CATALOG NO.	VOLT	MOUNTING	NOTES
S1	PENDANT LIGHTING, CIRCLE CONFIGURATION	LED	DELRAY LIGHTING	UDC3SW35CRBDIM-W1	277	SUSPENDED	7
S2	PENDANT LIGHTING, CIRCLE CONFIGURATION	LED	DELRAY LIGHTING	UDC5SW35CRBDIM-W1	277	SUSPENDED	7
T	LED WALL SCONCE	LED	BEGA-US	33341	277	WALL @ 13'-6" AF, UON	--
U1	PENDANT LIGHTING, CIRCLE CONFIGURATION	LED	ALW LIGHTING	LP1/MR1SD-DX-DÉCOR/3500K-0/10V/1%-EXT/F-AL-277	277	SUSPENDED	--
X	LED EXIT SIGN, AC ONLY, GREEN LEDS, THERMOPLASTIC HOUSING	LED	DUAL-LITE LITHONIA COOPER / SURE-LITES	LX-U-G-B-E LQM-S-W-3-G-277 APX6-G	277	AS INDICATED	--
X1	LED EXIT SIGN, AC ONLY, GREEN LEDS, THERMOPLASTIC HOUSING, WITH PROTECTIVE WIRE GUARD	LED	DUAL-LITE LITHONIA COOPER / SURE-LITES	LX-U-G-B-E-WGLX LQM-S-W-3-G-277-ELAWG APX6-G	277	WALL @ 8'-0" AF	--
XM	LED "ON AIR" SIGN	LED	LITHONIA	LQM P 1 R 120/277 SW13	277	WALL @ 8'-0" AF	--
Y	THERMOPLASTIC LED EMERGENCY BATTERY LIGHT, WITH SELF-DIAGNOSTICS, WHITE FINISH	LED	DUAL-LITE LITHONIA COOPER / SURE-LITES	EV2I ELM2-LED-SD LEMSD	277	WALL @ 8'-0" AF	--
BB	EXTERIOR LED WALL SCONCE, CAST ALUMINUM HOUSING, GASKETED CLEAR GLASS LENS, TYPE III DISTRIBUTION, FULL CUTOFF, SILVER FINISH, UL WET LOCATION	LED INTEGRAL 5015 LUMENS	KIM	WD14D3-E35-60L-4k-277	277	WALL @ 12'-4" AG	2,4
CC	EXTERIOR 16" WIDE x 9" DEEP TRAPEZOIDAL COMPACT FLUORESCENT WALL PACK, FULL CUTOFF, CLEAR GLASS LENS, CAST ALUMINUM HOUSING, SILVER FINISH, UL WET LOCATION	LED INTEGRAL 3,200 LUMENS	HUBBELL HE WILLIAMS FOCAL POINT	TRP-30L-4K-035-3-U ---- IST-52CF-E1-2S-GM	277	WALL @ 8'-0" AG, UNLESS OTHERWISE NOTED	2,4
DD	POLE MOUNTED AREA LUMINAIRE, SINGLE HEAD PER POLE, IES TYPE IV LIGHTING DISTRIBUTION, INTERNAL HOUSE-SIDE SHIELD.	14,561LM LED / 4000K	KIM COOPER LIGHTING PHILLIPS GARDCO	1SA-ALT-4NFOP70-96L-4K-BL GLEON-AF-04-LED-E1-SL4-BK GL18-1-4-255LA-NW-277-BLP-HSRPA2	277	20' POLE	2
DD1	POLE MOUNTED AREA LUMINAIRE, SINGLE HEAD PER POLE, IES TYPE III LIGHTING DISTRIBUTION, INTERNAL HOUSE-SIDE SHIELD.	15,172LM LED / 4000K	KIM COOPER LIGHTING PHILLIPS GARDCO	1SA-ALT-3NFO70-96L-4K-BL GLEON-AF-04-LED-E1-SL3-BK GL18-1-3-125LA-NW-277-BLP-HSRPA2	277	20' POLE	2
DD2	SAME LUMINAIRE AS DD1, SHORTER POLE USED	15,172LM LED / 4000K	KIM COOPER LIGHTING PHILLIPS GARDCO	1SA-ALT-3NFO70-96L-4K-BL GLEON-AF-04-LED-E1-SL3-BK GL18-1-3-125LA-NW-277-BLP-HSRPA2	277	15' POLE	2
DD3	POLE MOUNTED AREA LUMINAIRE, DOUBLE HEAD PER POLE, IES TYPE III LIGHTING DISTRIBUTION, INTERNAL HOUSE-SIDE SHIELD.	15,172LM / HEAD LED 4000K	KIM COOPER LIGHTING PHILLIPS GARDCO	2SB-ALT-3NFO70-96L-4K-BL GLEON-AF-04-LED-E1-SL3-BK-EA-LH/HSS GL18-2-3-125LA-NW-277-BLP-HSRPA2	277	20' POLE	2
DD4	SAME LUMINAIRE AS DD3, SHORTER POLE USED	15,172LM / HEAD LED 4000K	KIM COOPER LIGHTING PHILLIPS GARDCO	2SB-ALT-3NFO70-96L-4K-BL GLEON-AF-04-LED-E1-SL3-BK-EA-LH/HSS GL18-2-3-125LA-NW-277-BLP-HSRPA2	277	15' POLE	2

GENERAL NOTES:

A. TAMPER-RESISTANT/TAMPER-PROOF HARDWARE IS PROHIBITED.

SPECIFIC NOTES:

1. PROVIDE FIXTURE WITH GENERATOR TRANSFER DEVICE.
2. VERIFY FINISH COLOR SELECTION WITH ARCHITECT PRIOR TO ORDER.
3. INSTALL BOTTOM OF FIXTURE FLUSH WITH BOTTOM OF STEEL JOISTS.
4. VERIFY EXACT MOUNTING HEIGHTS WITH ARCHITECTURAL ELEVATIONS.
5. NO SUBSTITUTIONS. PROVIDE FIXTURE OF MANUFACTURER AND CATALOG NUMBER AS LISTED.
6. REMOTE DRIVER FOR COVE LIGHT FIXTURE SHALL BE MOUNTED IN NEAR-BY ACCESSIBLE CEILING SPACE, UON.
7. 'S' SERIES FIXTURES SUSPENDED AT 10' 2".
8. CONTRACTOR TO PROVIDE NEMA 5-20P TO BE INSTALLED WITH FIXTURE.

LIGHTING FIXTURE SCHEDULE

FIXTURE TYPE	DESCRIPTION	LAMP	MANUFACTURER	CATALOG NO.	VOLT	MOUNTING	NOTES
A	2'x4' LED LENSED TROFFER, 0.156" THICK PRISMATIC LENS AND 0-10V DRIVER	3500K LED 5,450 LUMENS 110 LM/W	COLUMBIA COOPER/METALUX LITHONIA	LJT24-35LWG-FSA19-EDU 24GR-LD456A19/156-UNV-L835-CD1 2TL4-60L-FW-A19-EZ1-LP835	277	RECESSED/ GRID	--
A1	2'x2' LED LENSED TROFFER, 0.156" THICK PRISMATIC LENS, WITH 0-10V DRIVER	3500K LED 3,200 LUMENS 90 LM/W	COLUMBIA COOPER/METALUX LITHONIA	LJT22-35MLG-FSA19-ED 22GR-LD4-32-A19/156-UNV-L835-CD1 2TL2-33L-FW-A19-EZ1-LP835	277	RECESSED/ GRID	--
A4	2X4' LED TROFFER, STEEL HOUSING, WHITE REFLECTOR FINISH, ACRYLIC LENS, SEALED AND GASKETED, 0-10V DRIVER	3500K LED 5,450 LUMENS 110 LM/W	COLUMBIA COOPER/METALUX KENALL	LJT24-35HLG-FSA19-EDU-G2 24GR-LD456A19/156-UNV-L835-CD1-G2 CSEFL24-45L35K-DCC-1-DV-5F-5H-T-2	277	RECESSED/ GRID	--
A4G	SAME AS TYPE A4 WITH GENERATOR TRANSFER DEVICE	3500K LED 5,450 LUMENS 110 LM/W	COLUMBIA COOPER/METALUX KENALL	LJT24-35HLG-FSA19-EDU-G2-GTD 24GR-LD456A19/156-UNV-GTD2-L835-CD1-G2 CSEFL24-45L35K-DCC-1-DV-5F-5H-T-2	277	RECESSED/ GRID	1
AD	2'x4' LED LENSED TROFFER, 0.156" THICK PRISMATIC LENS, 0-10V DRIVER	3500K LED 5,450 LUMENS 110 LM/W	COLUMBIA COOPER/METALUX LITHONIA	LJT24-35HLG-FSA19-EDU 24GR-LD456A19/156-UNV-L835-CD1 2TL4-60L-FW-A19-EZ1-LP835	277	RECESSED/ GRID	--
B	1'x4' LED LENSED TROFFER, 0.156" THICK PRISMATIC LENS WITH 0-10V DRIVER	3500K LED 2,000 LUMENS 90 LM/W	COLUMBIA COOPER/METALUX LITHONIA	LLT14-35LWG-FS-A19F-EU 14GR-LD4-20-A19/156-UNV-L835-CD1 TL4-20L-A19-EZ1-LP835	277	RECESSED/ GRID	--
BG	1'x4' LED LENSED TROFFER, 0.156" THICK PRISMATIC LENS, GENERATOR TRANSFER DEVICE WITH 0-10V DRIVER	3500K LED 2,000 LUMENS 90 LM/W	COLUMBIA COOPER/METALUX LITHONIA	LLT14-35LWG-FS-A19F-EU PLUS GTD 14GR-LD4-20-A19/156-UNV-L835-GTD2-CD1 TL4-20L-A19-EZ1-LP835-GTD	277	RECESSED/ GRID	1
B1	1'x4' LED LENSED TROFFER, 0.156" THICK PRISMATIC LENS, FLANGED FOR INSTALLATION IN DRYWALL WITH 0-10V DRIVER	3500K LED 3,000 LUMENS 90 LM/W	COLUMBIA COOPER/METALUX LITHONIA	LLT14-35HLG-FS-A19F-EU PLUS FK14 14GR-LD4-32-A19/156-UNV-L835-CD1 TL4-30L-A19-EZ1-LP835-DGA14	277	RECESSED/ DRYWALL	--
B2	6"x4' LINEAR LED, 0.156" THICK PRISMATIC LENS, FLANGED FOR INSTALLATION IN DRYWALL WITH 0-10V DRIVER	3500K LED 2,524 LUMENS 108 LM/W	MARK LIGHTING	SL6L-LOP-4FT-FLP-FL-80CRI-35K-600LMF-277-ZT	277	RECESSED/ DRYWALL	--
B3	6"x6' LINEAR LED, 0.156" THICK PRISMATIC LENS, FLANGED FOR INSTALLATION IN DRYWALL WITH 0-10V DRIVER	3500K LED 3,786 LUMENS 108 LM/W	MARK LIGHTING	SL6L-LOP-6FT-FLP-FL-80CRI-35K-600LMF-277-ZT	277	RECESSED/ DRYWALL	--
B4	1'x2' SURFACE-MOUNT LED WRAPAROUND, 0-10V DRIVER	3500K LED 2,250 LUMENS 98 LM/W	LITHONIA	LBL2-20L-EZ1-LP835	277	CEILING MOUNT	--
D	4' LED INDUSTRIAL STRIP LIGHT, APERTURED REFLECTOR, PAINTED WHITE HOUSING WITH 0-10V DRIVER	3500K LED 5,000 LUMENS 115 LM/W	COLUMBIA COOPER/METALUX LITHONIA	LCR4-35ML-EU 4-SNLED-LD4-50SL-RM-UNV-L835-CD1 ZL1D-L48-FST-MVOLT-80CRI	277	SUSPENDED @ 10'-0"AF	6
F1	4' LONG VAPORTIGHT LED WALL BRACKET, FULLY ENCLOSED AND GASKETED, UL LISTED FOR WET LOCATION, WALL MOUNTED WITH 0-10V DRIVER	3500K LED 5,000 LUMENS 115 LM/W	COLUMBIA COOPER/METALUX LITHONIA	LXEM4-35ML-DFA-EU 4VT2-LD4-6DR-UNV-L835-CD1-WL FEM4 LED-4L-IMACD	277	WALL @ 2'-0" AF	--
G	4' LONG LINEAR LED PENDANT, 95% INDIRECT DISTRIBUTION, 9" WIDE x 2.5" TALL CURVED CROSS SECTION, PERFORATED METAL STRIPS IN HOUSING, ADJUSTABLE AIR CRAFT CABLE SUSPENSION, MATTE WHITE FINISH, 0-10V DIMMING DRIVER	3500K LED 5,000 LUMENS 95 LM/W	ALERA DAYOLIGHT PEERLESS	LCV-4-35-HL-PERF-CM-VARIES-EDU-MW STYSL1-DI-SI-35-SO-4-ACY-W-U-DIM10 7CRM7L-HI-4FT-R8-277-EZB-LP835-F1/VARIES-C210	277	SUSPENDED @ 7'-6" AF, UNLESS OTHERWISE NOTED	--
J	6" LED REMOTE PHOSPHOR DOWNLIGHT WITH OPEN SEMI-DIFFUSE REFLECTOR AND 0-10V DRIVER	2000 LUMEN 35K LED	PRESCOLITE COOPER INDY	LF6LEDG4-6LFLED7G4 35K -WT LD6A20-D010TR-ERM6A20-8-35-6LM0-H-WF L6-23-35-U-G3-L600H-PT-Q-WH	277	RECESSED	--
JH	SAME AS TYPE 'J' WITH HIGH LUMEN PACKAGE	3000 LUMEN 35K LED	PRESCOLITE COOPER INDY	LF6LED8G4-6LFLED8G4 35K -WT LD6A30-D010TR-ERM6A20-8-35-6LM0-H-WF L6-28-35-U-G3-L600H-PT-Q-WH	277	RECESSED	--
JM	6" LED DOWNLIGHT, .063 ALUMINUM HOUSING	3558 LUMEN 35K LED	DELRAY LIGHTING PHIILIPS	IL7710-1050-W35 BPK561 DLM3000-/840 PSU WB GR	277	SUSPENDED	--
JP	SAME AS TYPE 'J' WITH PENDANT MOUNTING	3000 LUMEN 35K LED	PRESCOLITE COOPER INDY	LCC6LED-V1-CM-30L-35K-8WFL45-WC-WH LSR6A-DE010-P-ERCM6A20-835-6LM0-AC120P SC6-20-35-U-PT-Q-WH	277	SUSPENDED	--
JS	SAME AS TYPE 'JP' WITH DIFFERENT LUMEN PACKAGE	2000 LUMEN 35K LED	PRESCOLITE COOPER INDY	LCC6LED-V1-CM-24L-35K-8WFL45-WC-WH LSR6A-DE010-P-ERCM6A20-835-6LM0-AC120P SC6-20-35-U-PT-Q-WH	277	SUSPENDED	--
K	700ma LED HIGH BAY WITH MEDIUM DISTRIBUTION AND 0-10V DIMMING DRIVER	11,000 LUMENS LED 40k	PHILIPS/STONCO HUBBELL FAIL-SAFE	HBL 064GL 70 NW UNV M P WT FGS HBL-60L-U-A-2-35K-W-070-CD-WH FHL-11L-30-2A-UNV	277	SUSPENDED	3
N	4' LED WALL FIXTURE WITH WITH 0-10V DRIVER	3500K LED 4,000 LUMENS 90 LM/W	LITHONIA LUMINAIRE METALUX	WL4-40L-EZ1-LP840 TSL9-450W-3500K-M7-120-277-CP-WHT-NO 4BCLED-LD440SLF-UNV-L835-CD-1	277	WALL @ 7'-6" AF, UON	--
R1	6" THEATRICAL FRESNEL, MANUAL FOCUS ADJUSTMENT, INTEGRAL COLOR FRAME CLIPS, ADJUSTABLE YOKE WITH C-CLAMP FOR PIPE MOUNTING, SAFETY CABLE, 4-WAY BARN DOORS, COLOR FRAME WITH 1 SET OF GELS (RED, BLUE, GREEN)	300W QUARTZ	ALTMAN	1KAF-MBF-510-6-BD-4	120	PIPE	--
R2	LIGHTING TRACK, 2-CIRCUIT, 8-FOOT SECTIONS	---	PRESCOLITE LITHONIA HALO	AKT8-WH L2T8-WH L642-P	120	SURFACE	--
R3	2.5" THEATRICAL FRESNEL, DIE-CAST ALUMINUM CONSTRUCTION, YOKE WITH C-CLAMP FOR TRACK/PIPE MOUNTING, GEL MEDIA FRAME, THREE-PLANE STAINLESS-STEEL BLADE ASSEMBLY.	3000K LED 515 LUMENS 39 LM/W	ETC LIGHTING	4M50L-1-T	120	PIPE	5

GENERAL NOTES:

A. TAMPER-RESISTANT/TAMPER-PROOF HARDWARE IS PROHIBITED.

SPECIFIC NOTES:

1. PROVIDE FIXTURE WITH GENERATOR TRANSFER DEVICE.
2. VERIFY FINISH COLOR SELECTION WITH ARCHITECT PRIOR TO ORDER.
3. INSTALL BOTTOM OF FIXTURE FLUSH WITH BOTTOM OF STEEL JOISTS.
4. VERIFY EXACT MOUNTING HEIGHTS WITH ARCHITECTURAL ELEVATIONS.
5. NO SUBSTITUTIONS. PROVIDE FIXTURE OF MANUFACTURER AND CATALOG NUMBER AS LISTED.
6. REMOTE DRIVER FOR COVE LIGHT FIXTURE SHALL BE MOUNTED IN NEAR-BY ACCESSIBLE CEILING SPACE, UON.
7. 'S' SERIES FIXTURES SUSPENDED AT 10' 2".

James Posey Associates
Engineering Your Vision
Mechanical & Electrical Engineers
jamesposey.com
3112 Lord Baltimore Drive
Baltimore, MD 21244
tel 410-265-6100
fax 410-298-9820

Professional Certification. I hereby certify that these documents were prepared or approved by me, and that I am a duly licensed professional engineer under the laws of the state of Maryland, License No. 24861, Expiration date: 02-24-2018.

STATE OF MARYLAND ★ PATRICK J. MARQUEZ No. 24861 ★ PROFESSIONAL ENGINEER

JPA PROJECT NO. 6542-15

GRIMM AND PARKER
11720 Beltsville Drive
Suite 600
Calverton, MD 20705
Tel: 301.595.1000
www.grimmandparker.com

GP #21541

LIGHTING FIXTURE SCHEDULE

LANSDOWNE ELEMENTARY SCHOOL
2301 ALMA ROAD, BALTIMORE, MD

DATE	DESCRIPTION

E-7.1

11/17/16
BID SET

© GRIMM AND PARKER, P.C. 2014
© 2016 James Posey Associates, Inc.

© GRIMM AND PARKER, P.C. 2014

LIGHTING CONTROL SCHEMES E-1.1A

Name	Number	Lighting Control Scheme
CORRIDOR	A10	L5
CORRIDOR	A11	L5
CORRIDOR	A12	L11
CORRIDOR	A13	L5
CORRIDOR	A14	L5
WAITING AREA	A100	L11
SECRETARY AREA	A101	L11
SECRETARY AREA	A102	L11
ASSISTANT PRINCIPAL	A103	L2
CONFERENCE	A104	L2
PRINCIPAL	A105	L2
WORK/RECORDS	A106	L2
ASSISTANT PRINCIPAL	A109	L2
SW/PSYCH OFF	A110	L2
SW/PSYCH OFF	A111	L2
GUIDANCE	A112	L2
GUIDANCE OFFICE	A113	L2
STORAGE	A114	L3
TOILET	A115	L3
TOILET	A116	L3
STORAGE	A117	L3
TOILET	A118	L3
TOILET	A119	L3
TREATMENT/ MEDICATION	A120	L6
NURSE OFFICE	A121	L6
RESTING AREA	A122	L6
EXAMINATION	A123	L2
WAITING AREA	A124	L11
COMMUNITY ACTIVITY ROOM	A125	L8
EQUIPMENT STORAGE ROOM	A127	L3
WOMEN	A128	L4
MEN	A129	L4
COMMUNITY CONDIMENT AREA-1	A130	L3
MECH.	A131	L13
CORRIDOR	B11	L5
TOILET	B100	L4
TOILET	B101	L4
LOCKER ROOM	B102	L3
TOILET	B103	L3
SERVICE CLOSET	B104	L3
OT/PT	B105	L2
WHITING	B106	L3
WORKSPACE	B107	L2
BUILDING SERVICES OFFICE	B108	L2
PE - LARGE EQUIPMENT STORAGE	B130	L3B
WIRE CLOSET	B138	L3
UNISEX TOILET	B139	L3
TV ROOM	B142	L2

LIGHTING CONTROL SCHEMES E-1.1B

Name	Number	Lighting Control Scheme
CORRIDOR	B12	L5
RECEIVING	B109	L5
MECH.	B110	L13
ELEC	B111	L13
AUX. ELEC	B111A	L13
BLDG OUTSIDE STOR	B112	L3B
PE - OUTDOOR EQUIPMENT STORAGE	B113	L3B
CAN WASH	B114	L3
LOCKER	B115	L3
TOILET	B116	L3
SERVICE	B117	L3
RECEIVING	B118	L5
NON-FOOD STORAGE	B119	L3
DRY STORAGE	B120	L3B
OFFICE	B121	L2
FOOD PREP	B123	L13
SERVING LINE	B124	L13
SERVING LINE	B125	L13
GENERAL FURNITURE STORAGE	B126	L3B
PLATFORM	B127	L15
CAFETERIA	B128	L15
GYMNASIUM	B129	L14
PE INSTRUCTOR OFFICE	B131	L2
R&P EQUIPMENT STORAGE ROOM	B132	L3A
VOCAL/CHORAL CLASSROOM	B133	L1
STORAGE	B134	L3
INSTRUMENTAL CLASSROOM	B135	L1
INSTRUMENT STORAGE/ LIBRARY	B136	L3B
ADA LIFT	B137	L3A

LIGHTING CONTROL SCHEMES E-1.1C

Name	Number	Lighting Control Scheme
ELEV.	--	L13
VESTIBULE	C10	L5
CORRIDOR	C11	L5
CORRIDOR	C12	L5
CORRIDOR	C13	L5
CORRIDOR	C14	L5
MEDIA	C100	L10
DIGITAL LEARNING AREA	C101	L1A
MAKER SPACE	C102	L1A
STORAGE	C103	L3B
ELEC.	C104	L13
MDF/SERVER	C105	L3B
MECH.	C106	L13
VIDEO PRODUCTION STUDIO	C107	L7
CONTROL ROOM	C108	L2
LIBRARIAN OFFICE	C109	L2
RESOURCE	C110	L2
ART CLASSROOM	C111	L1A
STORAGE	C112	L3A
KINDERGARTEN	C113	L1
TOILET	C114	L3
STORAGE	C115	L3
KINDERGARTEN	C116	L1A
TOILET	C117	L3
STORAGE	C118	L3
SPEECH AND LANGUAGE	C119	L2
KINDERGARTEN	C120	L1A
STORAGE	C121	L3
TOILET	C122	L3
MECH.	C123	L13
KINDERGARTEN	C124	L1
STORAGE	C125	L3
TOILET	C126	L3
KINDERGARTEN	C127	L1A
STORAGE	C128	L3
TOILET	C129	L3
COLLABORATIVE LEARNING	C130	L9
MECH.	C131	L13
PREKINDERGARTEN CLASSROOM	C132	L1A
STORAGE	C133	L3
TOILET	C134	L3
PREKINDERGARTEN CLASSROOM	C135	L1A
STORAGE	C136	L3
TOILET	C137	L3
MECH.	C138	L13
SERVICE	C139	L3
EARLY CHILDHOOD LEARNING	C140	L1A
STORAGE	C141	L3
TOILET	C142	L3
COLLABORATIVE LEARNING	C143	L9
CLASSROOM	C144	L1A
TOILET	C145	L3
E.L.A.	C146	L2
CLASSROOM	C147	L1A
TOILET	C148	L3
CLASSROOM	C149	L1A
TOILET	C150	L3
E.L.A.	C151	L2
CLASSROOM	C152	L1A
TOILET	C153	L3
MECHANICAL	C154	L13
GRADE LEVEL STORAGE	C155	L3B
CLASSROOM	C156	L1A
TOILET	C157	L3
E.L.A.	C158	L2
ENRICHMENT/REMEDIAL READING	C159	L1A
MECHANICAL	C160	L13
ESOL RESOURCE ROOM	C161	L1A
FACULTY LOUNGE	C162	L2
TOILET	C163	L3
TOILET	C164	L3
FACULTY DINING	C165	L2
SUPPLY	C166	L3B
STAIR	ST2	L5
STAIR	ST3	L5

LIGHTING CONTROL SCHEMES E-1.2C

Name	Number	Lighting Control Scheme
MECHANICAL	B200	L13
CORRIDOR	C20	L5
CORRIDOR	C21	L5
CORRIDOR	C22	L5
CORRIDOR	C23	L5
CLASSROOM	C200	L1A
E.L.A.	C201	L2
GRADE LEVEL STORAGE	C202	L3B
MEN'S TOILET	C203	L4
WOMEN'S TOILET	C204	L4
WIRE CLOSET	C205	L13
MECH.	C206	L13
WORKROOM	C207	L2
TOILET	C208	L4
TOILET	C209	L4
ELEC.	C210	L13
GRADE LEVEL STORAGE	C211	L3B
CLASSROOM	C212	L1A
MECH.	C213	L13
E.L.A.	C214	L2
SPECIAL EDUCATION	C215	L1A
CLASSROOM	C216	L1A
E.L.A.	C217	L2
CLASSROOM	C218	L1A
MECH.	C219	L13
CLASSROOM	C220	L1A
E.L.A.	C221	L2
CLASSROOM	C222	L1A
GRADE LEVEL STORAGE	C223	L3B
CLASSROOM	C224	L1A
E.L.A.	C225	L2
CLASSROOM	C226	L1A
MECH.	C227	L13
CLASSROOM	C228	L1A
E.L.A.	C229	L2
CLASSROOM	C230	L1A
COLLABORATIVE LEARNING	C231	L9
CLASSROOM	C232	L1A
MECH.	C234	L13
E.L.A.	C235	L2
SERVICE	C236	L13
TOILET	C237	L3
CLASSROOM	C238	L1A
COLLABORATIVE LEARNING	C239	L9
CLASSROOM	C240	L1A
E.L.A.	C241	L2
CLASSROOM	C242	L1A
MECH.	C243	L13
CLASSROOM	C244	L1A
E.L.A.	C245	L2
CLASSROOM	C246	L1A
GRADE LEVEL STORAGE	C247	L3B
CLASSROOM	C248	L1A
E.L.A.	C249	L2
CLASSROOM	C250	L1A
MECH.	C251	L13
CLASSROOM	C252	L1A
E.L.A.	C253	L2
CLASSROOM	C254	L1A
EMR	C256	L13
BEHAVIOR SPECIALIST OFFICE	C257	L2
UNISEX TOILET	C258	L3
STAIR	ST1	L5
STAIR	ST2	L5
STAIR	ST3	L5

James Posey Associates
Engineering your vision
Mechanical & Electrical Engineers
jamesposey.com
3112 Lord Baltimore Drive
Baltimore, MD 21244
tel 410-265-6100
fax 410-298-9820

Professional Certification. I hereby certify that these documents were prepared or approved by me, and that I am a duly licensed professional engineer under the laws of the state of Maryland. License No. 24361, Expiration date: 02-24-2018.

JPA PROJECT NO. 6548-15

GRIMM AND PARKER
11720 Beltsville Drive
Suite 600
Calverton, MD 20705
Tel: 301.595.1000
www.grimmandparker.com

GP #21541

LIGHTING CONTROLS SCHEME SCHEDULES

LANSDOWNE ELEMENTARY SCHOOL
2301 ALMA ROAD, BALTIMORE, MD

DATE	DESCRIPTION
10/7/16	ADD NO.1

E-7.2

11/17/16
BID SET

© 2016 James Posey Associates, Inc.

© GRIMM AND PARKER, P.C. 2014

GENERAL NOTES:

A. THIS DETAIL IS DIAGRAMTIC AND NOT EVERY ROOM, DEVICE, OR INSTANCE MAY BE SHOWN. PROVIDE COMPONENTS AS REQUIRED PER THE MANUFACTURER'S INSTALLATION INSTRUCTIONS. USE THIS DETAIL FOR GUIDANCE ON A TYPICAL LAYOUT FOR THE LIGHTING CONTROL SYSTEM. COORDINATE WITH FLOOR PLANS EXACT NUMBER OF DEVICES, AND PROVIDE CONNECTIONS AND ANY ADDITIONAL COMPONENTS FOR EVERY LIGHTING CONTROL DEVICE SHOWN ON THE LIGHTING FLOOR PLANS, AS APPLICABLE.

SPECIFIC NOTES:

1. PROVIDE COMMUNICATIONS CABLING TO CONNECT LIGHTING CONTROLS EQUIPMENT, DEVICES, AND COMPONENTS. CABLING SHALL BE PER LIGHTING CONTROLS MANUFACTURER'S REQUIREMENTS.
2. PROVIDE COMMUNICATIONS CABLING TO INTERCONNECT LIGHTING RELAY ROOM CONTROLLERS WITHIN THE SCHOOL.
3. CONNECT TO LIGHTING RELAY ROOM CONTROLLERS IN EVERY AREA AND EVERY FLOOR OF THE SCHOOL.

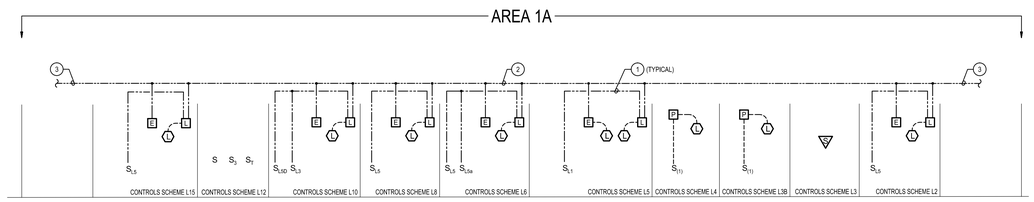

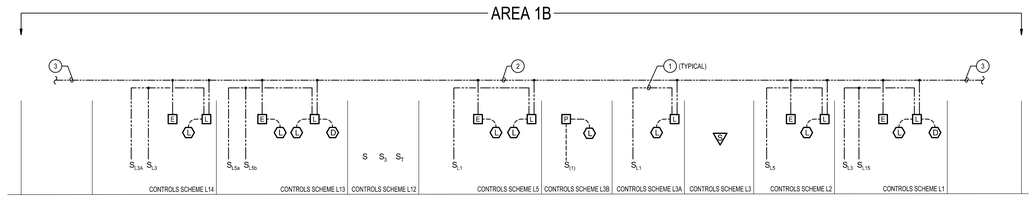

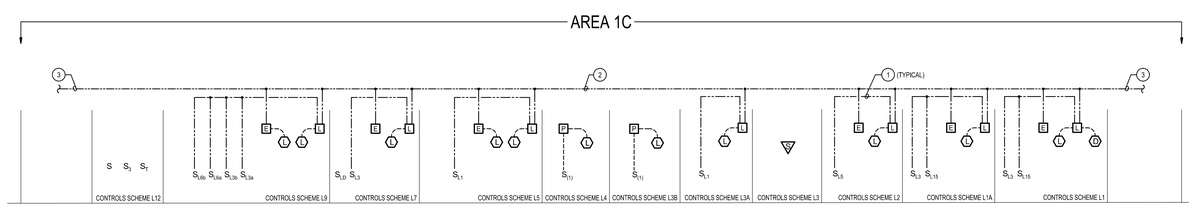

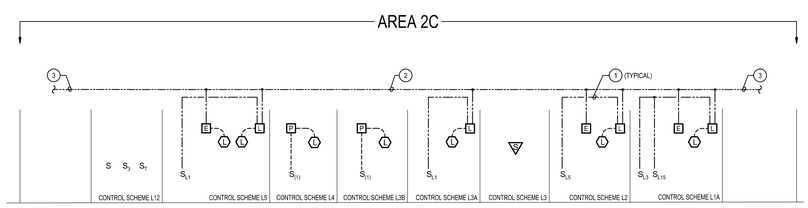

1 E-7.3 LIGHTING CONTROLS DIAGRAM
NETWORKED LIGHTING CONTROLS
NO SCALE

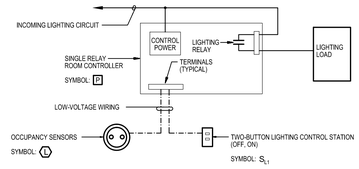

GENERAL NOTES:

A. PROVIDE CUSTOM ENGRAVING AS DIRECTED BY OWNER ON EACH BUTTON OF EACH DEVICE TO MATCH THE FUNCTIONS OF THE SPACE. DEVICE LABELS SHOWN ARE GENERIC IN NATURE AND DO NOT REPRESENT THE EXACT FINAL EXPECTED ENGRAVING.
B. EXACT LOCATION OF OCCUPANCY SENSOR TO BE DETERMINED BY LIGHTING CONTROL MANUFACTURER.
C. COORDINATE LOCATION OF WALL CONTROL STATION WITH ROOM ENTRY DOOR AND WALL MOUNTED EQUIPMENT.
D. PROVIDE SINGLE RELAY ROOM CONTROLLERS AS REQUIRED TO CONNECT TO NUMBER OF OCCUPANCY SENSORS INDICATED ON FLOOR PLANS.
E. OCCUPANCY SENSORS SHALL OPERATE IN VACANCY MODE, AND SHALL NOT ILLUMINATE UPON SPACE OCCUPANCY. AFTER 20 MINUTES OF SPACE VACANCY LIGHT FIXTURES SHALL TURN OFF.

2 E-7.3 LIGHTING CONTROLS DIAGRAM
TYPICAL SWITCH PACK / POWER PACK ROOM CONTROLLER
NO SCALE

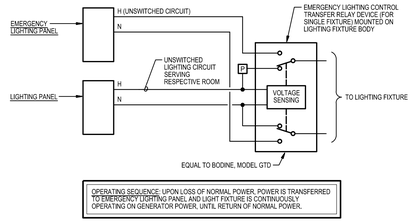

OPERATING SEQUENCE: UPON LOSS OF NORMAL POWER, POWER IS TRANSFERRED TO EMERGENCY LIGHTING PANEL AND LIGHT FIXTURE IS CONTINUOUSLY OPERATING ON GENERATOR POWER, UNTIL RETURN OF NORMAL POWER.

3 E-7.3 LIGHTING CONTROLS DIAGRAM
EMERGENCY LIGHTING CONTROL TRANSFER RELAY DEVICE
NO SCALE

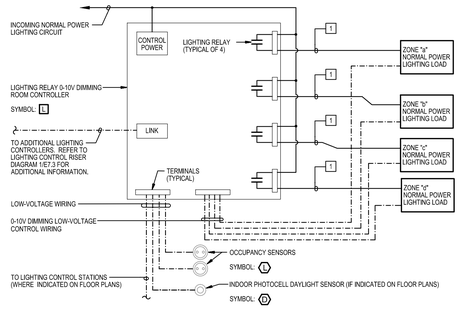

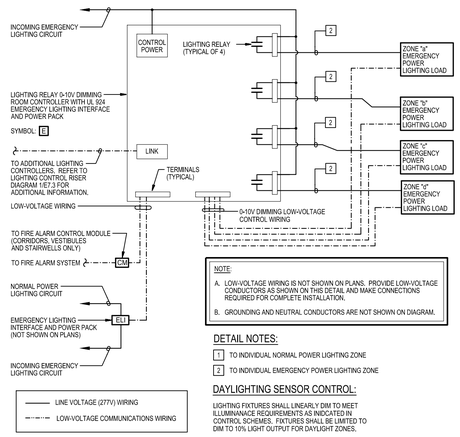

NOTE:
A. LOW-VOLTAGE WIRING IS NOT SHOWN ON PLANS. PROVIDE LOW-VOLTAGE CONDUCTORS AS SHOWN ON THIS DETAIL AND MAKE CONNECTIONS REQUIRED FOR COMPLETE INSTALLATION.
B. GROUNDING AND NEUTRAL CONDUCTORS ARE NOT SHOWN ON DIAGRAM.

DETAIL NOTES:
1 TO INDIVIDUAL NORMAL POWER LIGHTING ZONE
2 TO INDIVIDUAL EMERGENCY POWER LIGHTING ZONE

LINE VOLTAGE (277V) WIRING
LOW-VOLTAGE COMMUNICATIONS WIRING

DAYLIGHTING SENSOR CONTROL:
LIGHTING FIXTURES SHALL LINEARLY DIM TO MEET ILLUMINANACE REQUIREMENTS AS INDICATED IN CONTROL SCHEMES. FIXTURES SHALL BE LIMITED TO DIM TO 10% LIGHT OUTPUT FOR DAYLIGHT ZONES.

GENERAL NOTES (TYPICAL LIGHTING CONTROLS WIRING DIAGRAM):

A. REFER TO LIGHTING PLANS FOR EXACT QUANTITY OF LIGHTING FIXTURES.
B. UPON FIRE ALARM ACTIVATION OR SIGNAL, FIXTURES SHALL ILLUMINATE TO 100% LIGHT OUTPUT REGARDLESS OF OCCUPANCY AND SHALL REMAIN ILLUMINATED UNTIL CONDITION IS RESOLVED.
C. UPON LOSS OF POWER, LIGHT FIXTURES ON EMERGENCY POWER SHALL ILLUMINATE TO 100% LIGHT OUTPUT REGARDLESS OF OCCUPANCY UNTIL NORMAL POWER IS RESTORED.
D. NOT ALL ZONES OR EMERGENCY CONTROLLER WILL BE REQUIRED. REFER TO FLOOR PLANS FOR WIRING REQUIREMENTS WITHIN EACH SPACE.
E. ROOM CONTROLLERS, (EMERGENCY AND NORMAL POWER) SHALL BE NETWORKED TOGETHER AND CONNECTED TO A MASTER CONTROL HUB LOCATED IN THE FACILITIES MANAGER'S OFFICE.

4 E-7.3 LIGHTING CONTROLS DIAGRAM
TYPICAL FOUR-RELAY ROOM CONTROLLERS
NO SCALE

James Posey Associates
Engineering Your Vision
Mechanical & Electrical Engineers
jamesposey.com
3112 Lord Baltimore Drive
Baltimore, MD 21244
tel 410-265-6100
fax 410-298-9820

Professional Certification. I hereby certify that these documents were prepared or approved by me, and that I am a duly licensed professional engineer under the laws of the State of Maryland. License No. 24861. Expiration Date: 02-24-2018.

JPA PROJECT NO. 6542-15

11720 Beltsville Drive
Suite 600
Calverton, MD 20705
Tel: 301.595.1000
www.grimmandparker.com
GRIMM AND PARKER

GP #21541

LIGHTING CONTROLS DIAGRAMS
LANSDOWNE ELEMENTARY SCHOOL
2301 ALMA ROAD, BALTIMORE, MD

DATE	DESCRIPTION

E-7.3
11/17/16
BID SET

November 10, 2016 11:10 a.m.
Drawing: T:\6542-15\D-DRAWINGS\E542-7.3.DWG zeyes

© 2016 James Posey Associates, Inc.

© GRIMM AND PARKER, P.C. 2014

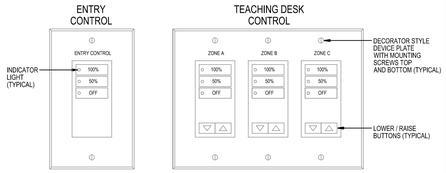

SWITCH TYPE: S_{L3} SWITCH TYPE: S_{L15}

CONTROL SCHEME APPLIES TO THE FOLLOWING TYPICAL SPACES:

CLASSROOM SPACES WITH DAYLIGHT HARVESTING.

OPERATIONAL SEQUENCE:

A. INITIAL ENTRY INTO SPACE SHALL REQUIRE MANUAL ACTIVATION OF LIGHTING FIXTURES THROUGH LOCAL LIGHTING CONTROL STATION.
B. LIGHTING CONTROL STATIONS SHALL PROVIDE THE SCENES AS SHOWN ABOVE. SCENES ARE DEFINED AS:

ENTRY CONTROL
1. 100%: LIGHTING FIXTURES IN SPACE SHALL TURN ON TO 100% LIGHT OUTPUT. DAYLIGHT ZONES 'e', 'f', AND 'g' LIGHTING FIXTURES SHALL TURN ON TO A LIGHT OUTPUT IN ORDER TO MAINTAIN A MINIMUM 40 FOOT-CANDLES ON THE WORKPLANE.
2. 50%: LIGHTING FIXTURES IN SPACE SHALL TURN ON TO 50% LIGHT OUTPUT. DAYLIGHT ZONES 'e', 'f', AND 'g' LIGHTING FIXTURES SHALL TURN ON TO A LIGHT OUTPUT IN ORDER TO MAINTAIN A MINIMUM 20 FOOT-CANDLES ON THE WORKPLANE.
3. OFF: LIGHTING FIXTURES IN SPACE SHALL TURN OFF.

TEACHING DESK CONTROL (ZONE 'e' AND DAYLIGHT ZONE 'e'; TYPICAL FOR ZONE 'e' AND DAYLIGHT ZONE 'f'; TYPICAL FOR ZONE 'c' AND DAYLIGHT ZONE 'g')
1. 100%: ZONES 'a' AND 'e' LIGHTING FIXTURES SHALL TURN ON TO 100% LIGHT OUTPUT. DAYLIGHT ZONE 'e' LIGHTING FIXTURE(S) SHALL TURN ON TO A LIGHT OUTPUT IN ORDER TO MAINTAIN A MINIMUM 40 FOOT-CANDLES ON THE WORKPLANE.
2. 50%: ZONES 'a' AND 'e' LIGHTING FIXTURES SHALL TURN ON TO 50% LIGHT OUTPUT. DAYLIGHT ZONE 'e' LIGHTING FIXTURE(S) SHALL TURN ON TO A LIGHT OUTPUT IN ORDER TO MAINTAIN A MINIMUM 20 FOOT-CANDLES ON THE WORKPLANE.
3. OFF: ZONES 'a' AND 'e' LIGHTING FIXTURES SHALL TURN OFF.
4. MANUAL LOWER BUTTON SHALL LOWER LIGHT OUTPUT OF ZONES 'a' AND 'e' LIGHTING FIXTURES. IF LIGHTING FIXTURES ARE TURNED OFF, THEY SHALL REMAIN OFF.
5. MANUAL RAISE BUTTON SHALL RAISE LIGHT OUTPUT OF ZONES 'a' AND 'e' LIGHTING FIXTURES UNTIL LIGHT OUTPUT REACHES 100%.

C. WHEN OCCUPANCY IS NOT DETECTED FOR 15 MINUTES, LIGHTING FIXTURES SHALL TURN OFF. MANUAL REACTIVATION SHALL BE REQUIRED.

OCCUPANCY STATUS FOR HVAC CONTROLS:

X. ANY OCCUPANCY SENSOR WITHIN THE SPACE SHALL HAVE AN INTERFACE (AUXILIARY CONTACTS) TO SIGNAL OCCUPANCY STATUS TO HVAC CONTROLS.
Y. CONTACTS SHALL CLOSE UPON DETECTION OF OCCUPANCY.
Z. AFTER 5 SECONDS OF UNDETECTED OCCUPANCY, CONTACTS SHALL OPEN.

1 / E-7.4 DIAGRAM
LIGHTING CONTROLS SCHEME 'L1'
NO SCALE

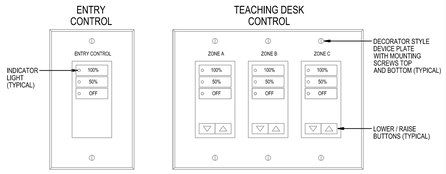

SWITCH TYPE: S_{L3} SWITCH TYPE: S_{L15}

CONTROL SCHEME APPLIES TO THE FOLLOWING TYPICAL SPACES:

CLASSROOM SPACES.

OPERATIONAL SEQUENCE:

A. INITIAL ENTRY INTO SPACE SHALL REQUIRE MANUAL ACTIVATION OF LIGHTING FIXTURES THROUGH LOCAL LIGHTING CONTROL STATION.
B. LIGHTING CONTROL STATIONS SHALL PROVIDE THE SCENES AS SHOWN ABOVE. SCENES ARE DEFINED AS:

ENTRY CONTROL
1. 100%: LIGHTING FIXTURES IN SPACE SHALL TURN ON TO 100% LIGHT OUTPUT.
2. 50%: LIGHTING FIXTURES IN SPACE SHALL TURN ON TO 50% LIGHT OUTPUT.
3. OFF: LIGHTING FIXTURES IN SPACE SHALL TURN OFF.

TEACHING DESK CONTROL (ZONE 'a'; TYPICAL FOR ZONE 'b'; TYPICAL FOR ZONE 'c')
1. 100%: ZONE 'a' LIGHTING FIXTURES SHALL TURN ON TO 100% LIGHT OUTPUT.
2. 50%: ZONE 'a' LIGHTING FIXTURES SHALL TURN ON TO 50% LIGHT OUTPUT.
3. OFF: ZONE 'a' LIGHTING FIXTURES SHALL TURN OFF.
4. MANUAL LOWER BUTTON SHALL LOWER LIGHT OUTPUT OF ZONE 'a' LIGHTING FIXTURES. IF LIGHTING FIXTURES ARE TURNED OFF, THEY SHALL REMAIN OFF.
5. MANUAL RAISE BUTTON SHALL RAISE LIGHT OUTPUT OF ZONE 'a' LIGHTING FIXTURES UNTIL LIGHT OUTPUT REACHES 100%.

C. WHEN OCCUPANCY IS NOT DETECTED FOR 15 MINUTES, LIGHTING FIXTURES SHALL TURN OFF. MANUAL REACTIVATION SHALL BE REQUIRED.

OCCUPANCY STATUS FOR HVAC CONTROLS:

X. ANY OCCUPANCY SENSOR WITHIN THE SPACE SHALL HAVE AN INTERFACE (AUXILIARY CONTACTS) TO SIGNAL OCCUPANCY STATUS TO HVAC CONTROLS.
Y. CONTACTS SHALL CLOSE UPON DETECTION OF OCCUPANCY.
Z. AFTER 5 SECONDS OF UNDETECTED OCCUPANCY, CONTACTS SHALL OPEN.

1A / E-7.4 DIAGRAM
LIGHTING CONTROLS SCHEME 'L1A'
NO SCALE

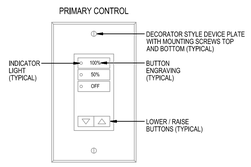

SWITCH TYPE: S_{L5}

CONTROL SCHEME APPLIES TO THE FOLLOWING TYPICAL SPACES:

E.L.A., OFFICES, CONFERENCE ROOMS, SUPPORT SPACES.

OPERATIONAL SEQUENCE:

A. INITIAL ENTRY INTO THE SPACE SHALL REQUIRE MANUAL ACTIVATION OF LIGHTING FIXTURES THROUGH LOCAL LIGHTING CONTROL STATION.
B. LIGHTING CONTROL STATION(S) SHALL PROVIDE THE SCENES AS SHOWN ABOVE. SCENES ARE DEFINED AS:

ENTRY CONTROL
1. 100%: LIGHTING FIXTURES SHALL TURN ON TO 100% LIGHT OUTPUT.
2. 50%: LIGHTING FIXTURES SHALL TURN ON TO 50% LIGHT OUTPUT.
3. OFF: LIGHTING FIXTURES SHALL TURN OFF.
4. MANUAL LOWER BUTTON SHALL LOWER LIGHT OUTPUT OF LIGHTING FIXTURES. IF LIGHTING FIXTURES ARE TURNED OFF, THEY SHALL REMAIN OFF.
5. MANUAL RAISE BUTTON SHALL RAISE LIGHT OUTPUT OF LIGHTING FIXTURES UNTIL LIGHT OUTPUT REACHES 100%.

C. WHEN OCCUPANCY IS NOT DETECTED FOR 15 MINUTES, LIGHTING FIXTURES SHALL TURN OFF. MANUAL REACTIVATION SHALL BE REQUIRED.

OCCUPANCY STATUS FOR HVAC CONTROLS:

X. ANY OCCUPANCY SENSOR WITHIN THE SPACE SHALL HAVE AN INTERFACE (CLOSED CONTACTS) TO PASS ALONG OCCUPANCY STATUS TO HVAC CONTROLS.
Y. CONTACT CLOSURE SHALL CLOSE UPON DETECTION OF OCCUPANCY.
Z. AFTER 5 SECONDS OF UNDETECTED OCCUPANCY, THE CONTACT CLOSURE SHALL OPEN.

2 / E-7.4 DIAGRAM
LIGHTING CONTROLS SCHEME 'L2'
NO SCALE

SWITCH TYPE:

CONTROL SCHEME APPLIES TO THE FOLLOWING TYPICAL SPACES:

SMALL STORAGE ROOMS, SERVICE (CUSTODIAL), SINGLE-OCCUPANT TOILET ROOMS

OPERATIONAL SEQUENCE:

A. INITIAL ENTRY INTO SPACE SHALL REQUIRE MANUAL ACTIVATION OF LIGHTING FIXTURES THROUGH LOCAL LIGHTING CONTROL STATION.
B. LIGHTING CONTROL STATION IS A LINE-VOLTAGE DUAL TECHNOLOGY LIGHTING CONTROL OCCUPANCY SENSOR SWITCH. SCENES ARE DEFINED AS:

ENTRY CONTROL
1. ON/OFF: IF LIGHTING FIXTURES IN SPACE ARE TURNED OFF, LIGHTING FIXTURES SHALL TURN ON TO 100% LIGHT OUTPUT. IF THE LIGHTING FIXTURES IN SPACE ARE TURNED ON, LIGHTING FIXTURES SHALL TURN OFF.

C. WHEN OCCUPANCY IS NOT DETECTED FOR 15 MINUTES, LIGHTING FIXTURES SHALL TURN OFF. MANUAL REACTIVATION SHALL BE REQUIRED.

3 / E-7.4 DIAGRAM
LIGHTING CONTROLS SCHEME 'L3'
NO SCALE

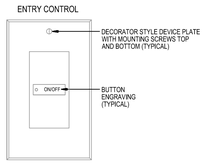

SWITCH TYPE: S_{L1}

CONTROL SCHEME APPLIES TO THE FOLLOWING TYPICAL SPACES:

STORAGE ROOMS, ADA LIFT B137

OPERATIONAL SEQUENCE:

A. INITIAL ENTRY INTO SPACE SHALL REQUIRE MANUAL ACTIVATION OF LIGHTING FIXTURES THROUGH LOCAL LIGHTING CONTROL STATION.
B. LIGHTING CONTROL STATION IS A LOW-VOLTAGE SINGLE-BUTTON CONTROL SWITCH. SCENES ARE DEFINED AS:

ENTRY CONTROL
1. ON/OFF: IF LIGHTING FIXTURES ARE TURNED OFF, MANUAL ACTIVATION OF BUTTON SHALL TURN ON LIGHTING FIXTURES TO 100% LIGHT OUTPUT. IF THE FIXTURES ARE TURNED ON, MANUAL ACTIVATION OF BUTTON SHALL TURN SHALL TURN OFF LIGHTING FIXTURES.

C. WHEN OCCUPANCY IS NOT DETECTED FOR 15 MINUTES, FIXTURES SHALL TURN OFF. MANUAL REACTIVATION SHALL BE REQUIRED.

3A / E-7.4 DIAGRAM
LIGHTING CONTROLS SCHEME 'L3A'
NO SCALE

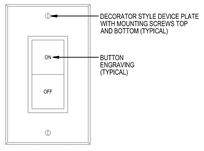

SWITCH TYPE: $S_{(1)}$

CONTROL SCHEME APPLIES TO THE FOLLOWING TYPICAL SPACES:

LARGE STORAGE ROOMS

OPERATIONAL SEQUENCE:

A. INITIAL ENTRY INTO SPACE SHALL REQUIRE MANUAL ACTIVATION OF LIGHTING FIXTURES THROUGH LOCAL LIGHTING CONTROL STATION.
B. LIGHTING CONTROL STATION IS A LOW-VOLTAGE TWO-BUTTON CONTROL SWITCH. SCENES ARE DEFINED AS:

ENTRY CONTROL
1. ON: LIGHTING FIXTURES SHALL TURN ON TO 100% LIGHT OUTPUT.
2. OFF: LIGHTING FIXTURES SHALL TURN OFF.

C. WHEN OCCUPANCY IS NOT DETECTED FOR 15 MINUTES, LIGHTING FIXTURES SHALL TURN OFF. MANUAL REACTIVATION SHALL BE REQUIRED.

3B / E-7.4 DIAGRAM
LIGHTING CONTROLS SCHEME 'L3B'
NO SCALE

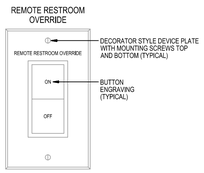

SWITCH TYPE: $S_{(1)}$

CONTROL SCHEME APPLIES TO THE FOLLOWING TYPICAL SPACES:

MULTI-OCCUPANT TOILET ROOMS

OPERATIONAL SEQUENCE:

A. LIGHTING FIXTURES SHALL PROVIDE FULL LIGHT OUTPUT AUTOMATICALLY AFTER OCCUPANCY IS DETECTED.
B. LIGHTING FIXTURES CONNECTED TO GENERATOR CIRCUIT SHALL HAVE INTEGRAL EMERGENCY LIGHTING CONTROL TRANSFER RELAY DEVICE. REFER TO LIGHTING CONTROLS DIAGRAM 3/E-7.3 FOR CONNECTIONS.
C. IF OCCUPANCY IS NOT DETECTED FOR 15 MINUTES, LIGHTING FIXTURES SHALL TURN OFF. LIGHTING FIXTURES SHALL RETURN TO FULL LIGHT OUTPUT AFTER OCCUPANCY IS DETECTED.

REMOTE RERSTROOM OVERRIDE: REMOTE LIGHTING CONTROL STATION SHALL OVERRIDE CONTROL SCHEME AND TURN ON LIGHTING FIXTURES IN RESPECTIVE RESTROOM TO 100% LIGHT OUTPUT REGARDLESS OF OCCUPANCY. AFTER 15 MINUTES FIXTURES SHALL RESUME NORMAL PROGRAMMING AS DESCRIBED ABOVE. REMOTE RESTROOM SWITCH NOT INDICATED ON FLOOR PLANS. PROVIDE REMOTE LIGHTING CONTROL OVERRIDE STATION IN NEAREST ELECTRICAL OR CUSTODIAL CLOSET. SWITCH SHALL NOT BE MOUNTED ADJACENT TO OTHER WALL SWITCHES AND SHALL BE CLEARLY IDENTIFIED.

4 / E-7.4 DIAGRAM
LIGHTING CONTROLS SCHEME 'L4'
NO SCALE

GENERAL NOTES:

A. COORDINATE EXACT ENGRAVING OF BUTTONS ON LIGHTING CONTROL STATIONS WITH OWNER/ARCHITECT PRIOR TO ORDERING DEVICES.

B. UPON FIRE ALARM IS ACTIVATION OR SIGNAL, LIGHTING FIXTURES ON EMERGENCY POWER SHALL ILLUMINATE TO 100% LIGHT OUTPUT REGARDLESS OF OCCUPANCY. ONCE FIRE ALARM IS DEACTIVATED, LIGHTING FIXTURES SHALL RETURN TO ORIGINAL PROGRAMMING.

C. SEE LIGHTING FLOOR PLANS FOR LIGHTING FIXTURE ZONES.

D. SEE LIGHTING FLOOR PLANS FOR NUMBER AND TYPES OF CONTROL STATIONS UTILIZED.

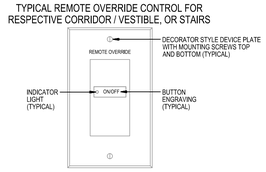

SWITCH TYPE: S_{L1}

CONTROL SCHEME APPLIES TO THE FOLLOWING TYPICAL SPACES:

CORRIDORS, VESTIBULES, STAIRWELLS, RECEIVING B109

OPERATIONAL SEQUENCE:

A. EACH CORRIDOR AND STAIRS WILL ACT INDEPENDENTLY.
B. LIGHTING FIXTURES SHALL PROVIDE FULL LIGHT OUTPUT AUTOMATICALLY AFTER OCCUPANCY IS DETECTED.
C. CORRIDORS AND LOBBIES: WHEN OCCUPANCY IS NOT DETECTED FOR 30 MINUTES, LIGHTING FIXTURES SHALL TURN OFF. LIGHTING FIXTURES SHALL RETURN TO FULL LIGHT OUTPUT AFTER OCCUPANCY IS DETECTED.
D. STAIRS: WHEN OCCUPANCY IS NOT DETECTED FOR 30 MINUTES, LIGHTING FIXTURES SHALL DIM TO 50% LIGHT OUTPUT. LIGHTING FIXTURES SHALL RETURN TO FULL LIGHT OUTPUT AFTER OCCUPANCY IS DETECTED.
E. UPON FIRE ALARM ACTIVATION OR SIGNAL, ALL FIXTURES IN STAIRS SHALL ILLUMINATE TO 100% LIGHT OUTPUT REGARDLESS OF OCCUPANCY AND SHALL REMAIN ILLUMINATED UNTIL CONDITION IS RESOLVED.

REMOTE OVERRIDE: REMOTE LIGHTING CONTROL STATION (SWITCH) SHALL OVERRIDE CONTROL SCHEME AND TURN ON LIGHTING FIXTURES IN RESPECTIVE CORRIDOR OR STAIRS TO 100% LIGHT OUTPUT FOR 30 MINUTES REGARDLESS OF OCCUPANCY. AFTER 30 MINUTES, LIGHTING FIXTURES SHALL RESUME NORMAL PROGRAMMING AS DESCRIBED ABOVE. SWITCH IS NOT INDICATED ON FLOOR PLANS. PROVIDE SWITCH IN NEAREST ELECTRICAL OR CUSTODIAL CLOSET. SWITCH SHALL NOT BE MOUNTED ADJACENT TO OTHER WALL SWITCHES AND SHALL BE CLEARLY IDENTIFIED.

5 / E-7.4 DIAGRAM
LIGHTING CONTROLS SCHEME 'L5'
NO SCALE

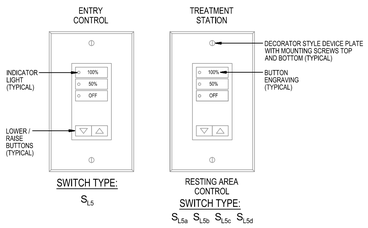

SWITCH TYPE: S_{L5} RESTING AREA CONTROL SWITCH TYPE: S_{L5a} S_{L5b} S_{L5c} S_{L5d}

CONTROL SCHEME APPLIES TO THE FOLLOWING TYPICAL SPACES:

TREATMENT/MEDICATION A120, NURSE OFFICE A121, RESTING AREA A122

OPERATIONAL SEQUENCE:

A. INITIAL ENTRY INTO THE SPACE SHALL REQUIRE MANUAL ACTIVATION OF LIGHTING FIXTURES THROUGH LOCAL LIGHTING CONTROL STATION.
B. LIGHTING CONTROL STATIONS SHALL PROVIDE THE SCENES AS SHOWN ABOVE. SCENES ARE DEFINED AS:

PRIMARY CONTROL
1. 100%: LIGHTING FIXTURES SHALL TURN ON TO 100% LIGHT OUTPUT.
2. 50%: LIGHTING FIXTURES SHALL TURN ON TO 50% LIGHT OUTPUT.
3. OFF: LIGHTING FIXTURES SHALL TURN OFF.
4. MANUAL LOWER BUTTON SHALL LOWER LIGHT OUTPUT OF LIGHTING FIXTURES. IF LIGHTING FIXTURES ARE TURNED OFF, THEY SHALL REMAIN OFF.
5. MANUAL RAISE BUTTON SHALL RAISE LIGHT OUTPUT OF LIGHTING FIXTURES UNTIL LIGHT OUTPUT REACHES 100%.

RESTING AREA CONTROL
1. 100%: LIGHTING FIXTURES IN ZONE SHALL TURN ON TO 100% LIGHT OUTPUT.
2. 50%: LIGHTING FIXTURES IN ZONE SHALL TURN ON TO 50% LIGHT OUTPUT.
3. OFF: LIGHTING FIXTURES IN ZONE SHALL TURN OFF.
4. MANUAL LOWER BUTTON SHALL LOWER LIGHT OUTPUT OF LIGHTING FIXTURES. IF LIGHTING FIXTURES ARE TURNED OFF, THEY SHALL REMAIN OFF.
5. MANUAL RAISE BUTTON SHALL RAISE LIGHT OUTPUT OF LIGHTING FIXTURES UNTIL LIGHT OUTPUT REACHES 100%.

C. IF OCCUPANCY IS NOT DETECTED FOR 15 MINUTES, LIGHTING FIXTURES SHALL TURN OFF. MANUAL REACTIVATION SHALL BE REQUIRED.

OCCUPANCY STATUS FOR HVAC CONTROLS:

X. ANY OCCUPANCY SENSOR WITHIN THE SPACE SHALL HAVE AN INTERFACE (CLOSED CONTACTS) TO PASS ALONG OCCUPANCY STATUS TO HVAC CONTROLS.
Y. CONTACT CLOSURE SHALL CLOSE UPON DETECTION OF OCCUPANCY.
Z. AFTER 5 SECONDS OF UNDETECTED OCCUPANCY, THE CONTACT CLOSURE SHALL OPEN.

6 / E-7.4 DIAGRAM
LIGHTING CONTROLS SCHEME 'L6'
NO SCALE

James Posey Associates
Engineering Your Vision
Mechanical & Electrical Engineers
jamesposey.com
3112 Lord Baltimore Drive
Baltimore, MD 21244
tel 410-265-6100
fax 410-298-9820

Professional Certification. I hereby certify that these documents were prepared or approved by me, and that I am a duly licensed professional engineer under the laws of the State of Maryland. License No. 24861. Expiration Date: 02-24-2018.

JPA PROJECT NO. 6542-15

11720 Beltsville Drive
Suite 600
Calverton, MD 20705
Tel: 301.595.1000
www.grimmandparker.com
GRIMM AND PARKER

GP #21541

LIGHTING CONTROLS DIAGRAMS

LANSDOWNE ELEMENTARY SCHOOL
2301 ALMA ROAD, BALTIMORE, MD

DATE	DESCRIPTION

E-7.4
11/17/16
BID SET

November 10, 2016 11:10 a.m.
Drawing: S:\6542-15\B-DRAWINGS\6542-7-E.DWG ZCHAES

© 2016 James Posey Associates, Inc.

GENERAL NOTES:

A. COORDINATE EXACT ENGRAVING OF BUTTONS ON LIGHTING CONTROL STATIONS WITH OWNER/ARCHITECT PRIOR TO ORDERING DEVICES.

B. UPON FIRE ALARM IS ACTIVATION OR SIGNAL, LIGHTING FIXTURES ON EMERGENCY POWER SHALL ILLUMINATE TO 100% LIGHT OUTPUT REGARDLESS OF OCCUPANCY. ONCE FIRE ALARM IS DEACTIVATED, LIGHTING FIXTURES SHALL RETURN TO ORIGINAL PROGRAMMING.

C. SEE LIGHTING FLOOR PLANS FOR LIGHTING FIXTURE ZONES.

D. SEE LIGHTING FLOOR PLANS FOR NUMBER AND TYPES OF CONTROL STATIONS UTILIZED.

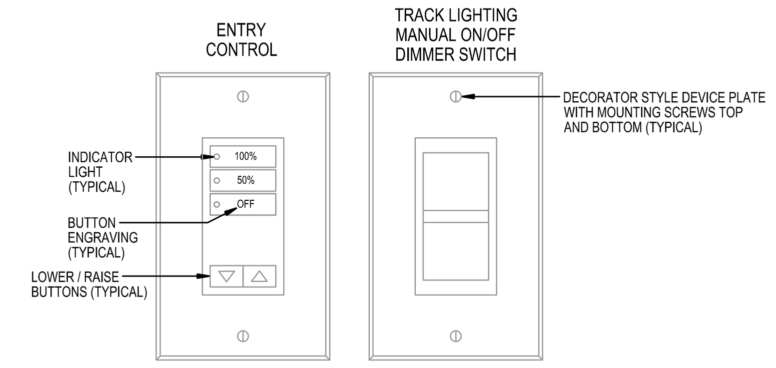

SWITCH TYPE: S_{L5}

SWITCH TYPE: S_{LD}

CONTROL SCHEME APPLIES TO THE FOLLOWING TYPICAL SPACES:

MEDIA PRODUCTION ROOM.

OPERATIONAL SEQUENCE:

A. INITIAL ENTRY INTO SPACE SHALL REQUIRE MANUAL ACTIVATION OF LIGHTING FIXTURES THROUGH LOCAL LIGHTING CONTROL STATION.
B. ENTRY LIGHTING CONTROL STATION SHALL CONTROL LIGHTING FIXTURES IN THE SPACE, EXCEPT TRACK LIGHTING.
C. WALL STATION SHALL PROVIDE THE SCENES AS SHOWN ABOVE. SCENES ARE DEFINED AS:

ENTRY CONTROL
1. 100%: TYPE 'D' LIGHTING FIXTURES SHALL TURN ON TO 100% LIGHT OUTPUT.
2. 50%: TYPE 'D' LIGHTING FIXTURES SHALL TURN ON TO 50% LIGHT OUTPUT.
3. OFF: LIGHTING FIXTURES SHALL TURN OFF.
4. MANUAL RAISE/LOWER BUTTONS SHALL RAISE AND LOWER LIGHT OUTPUT OF TYPE 'D' LIGHTING FIXTURES.

TRACK LIGHTING MANUAL ON/OFF DIMMER SWITCH
1. ON/OFF/MANUAL DIMMER: SHALL TURN TRACK LIGHTING ON/OFF AND MANUALLY DIMMING TRACK LIGHTS WITH A SLIDE DIMMER. SWITCH SHALL CONTROL TRACK LIGHTING ZONE INDICATED BY THE LOWERCASE LETTER.

D. WHEN OCCUPANCY IS NOT DETECTED FOR 15 MINUTES, LIGHTING FIXTURES SHALL TURN OFF. MANUAL REACTIVATION SHALL BE REQUIRED.

OCCUPANCY STATUS FOR HVAC CONTROLS:

X. ANY OCCUPANCY SENSOR WITHIN THE SPACE SHALL HAVE AN INTERFACE (CLOSED CONTACTS) TO PASS ALONG OCCUPANCY STATUS TO HVAC CONTROLS.
Y. CONTACT CLOSURE SHALL CLOSE UPON DETECTION OF OCCUPANCY.
Z. AFTER 5 SECONDS OF UNDETECTED OCCUPANCY, THE CONTACT CLOSURE SHALL OPEN.

7 / E-7.5 DIAGRAM
LIGHTING CONTROLS SCHEME 'L7'
NO SCALE

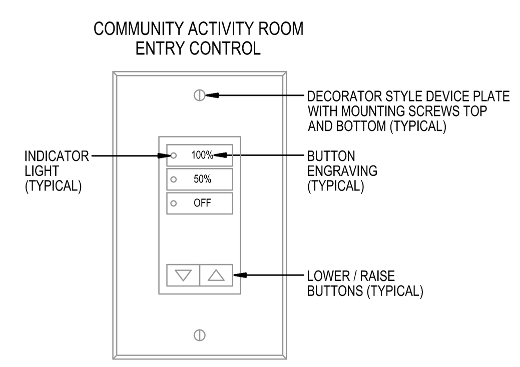

SWITCH TYPE: S_{L5}

CONTROL SCHEME APPLIES TO THE FOLLOWING TYPICAL SPACES:

COMMUNITY ACTIVITY ROOM A125

OPERATIONAL SEQUENCE:

A. INITIAL ENTRY INTO SPACE SHALL REQUIRE MANUAL ACTIVATION OF LIGHTING FIXTURES THROUGH LOCAL LIGHTING CONTROL STATION.
B. LIGHTING CONTROL STATIONS SHALL PROVIDE THE SCENES AS SHOWN ABOVE. SCENES ARE DEFINED AS:

ENTRY CONTROL
1. 100%: LIGHTING FIXTURES SHALL TURN ON TO 100% LIGHT OUTPUT.
2. 50%: LIGHTING FIXTURES SHALL TURN ON TO 50% LIGHT OUTPUT.
3. OFF: LIGHTING FIXTURES SHALL TURN OFF.
4. MANUAL LOWER BUTTON SHALL LOWER LIGHT OUTPUT OF THE LIGHTING FIXTURES. IF LIGHTING FIXTURES ARE TURNED OFF, THEY SHALL REMAIN OFF.
6. MANUAL RAISE BUTTON SHALL RAISE LIGHT OUTPUT OF THE LIGHTING FIXTURES UNTIL LIGHT OUTPUT REACHES 100%.

C. IF OCCUPANCY IS NOT DETECTED FOR 15 MINUTES, LIGHTING FIXTURES SHALL TURN OFF. MANUAL REACTIVATION SHALL BE REQUIRED.

OCCUPANCY STATUS FOR HVAC CONTROLS:

X. ANY OCCUPANCY SENSOR WITHIN THE SPACE SHALL HAVE AN INTERFACE (AUXILIARY CONTACTS) TO SIGNAL OCCUPANCY STATUS TO HVAC CONTROLS.
Y. CONTACTS SHALL CLOSE UPON DETECTION OF OCCUPANCY.
Z. AFTER 5 SECONDS OF UNDETECTED OCCUPANCY, CONTACTS SHALL OPEN.

8 / E-7.5 DIAGRAM
LIGHTING CONTROLS SCHEME 'L8'
NO SCALE

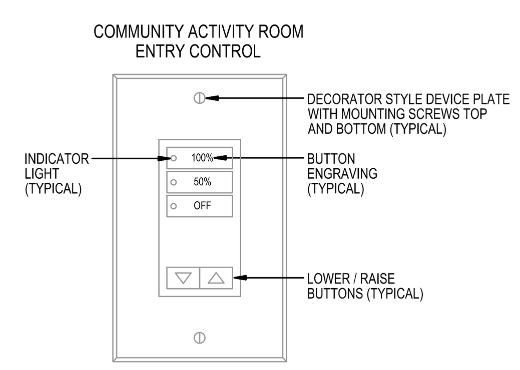

SWITCH TYPE: S_{L5}

CONTROL SCHEME APPLIES TO THE FOLLOWING TYPICAL SPACES:

COLLABORATIVE LEARNING C130, C143, C231, C239

OPERATIONAL SEQUENCE:

A. INITIAL ENTRY INTO SPACE SHALL REQUIRE MANUAL ACTIVATION OF LIGHTING FIXTURES THROUGH LOCAL LIGHTING CONTROL STATION.
B. LIGHTING CONTROL STATIONS SHALL PROVIDE THE SCENES AS SHOWN ABOVE. SCENES ARE DEFINED AS:

ENTRY CONTROL
1. 100%: LIGHTING FIXTURES SHALL TURN ON TO 100% LIGHT OUTPUT. IN ROOMS C130 AND C143, LIGHTING FIXTURES IN SPACE SHALL MAINTAIN 50 FOOT-CANDLES ON THE WORKPLANE.
2. 50%: LIGHTING FIXTURES SHALL TURN ON TO 50% LIGHT OUTPUT. IN ROOMS C130 AND C143, LIGHTING FIXTURES IN SPACE SHALL MAINTAIN 25 FOOT-CANDLES ON THE WORKPLANE.
5. OFF: LIGHTING FIXTURES SHALL TURN OFF.
6. MANUAL LOWER BUTTON SHALL LOWER LIGHT OUTPUT OF THE LIGHTING FIXTURES. IF LIGHTING FIXTURES ARE TURNED OFF, THEY SHALL REMAIN OFF.
6. MANUAL RAISE BUTTON SHALL RAISE LIGHT OUTPUT OF THE LIGHTING FIXTURES UNTIL LIGHT OUTPUT REACHES 100%.

C. IF OCCUPANCY IS NOT DETECTED FOR 15 MINUTES, LIGHTING FIXTURES SHALL TURN OFF. MANUAL REACTIVATION SHALL BE REQUIRED.

OCCUPANCY STATUS FOR HVAC CONTROLS:

X. ANY OCCUPANCY SENSOR WITHIN THE SPACE SHALL HAVE AN INTERFACE (AUXILIARY CONTACTS) TO SIGNAL OCCUPANCY STATUS TO HVAC CONTROLS.
Y. CONTACTS SHALL CLOSE UPON DETECTION OF OCCUPANCY.
Z. AFTER 5 SECONDS OF UNDETECTED OCCUPANCY, CONTACTS SHALL OPEN.

9 / E-7.5 DIAGRAM
LIGHTING CONTROLS SCHEME 'L9'
NO SCALE

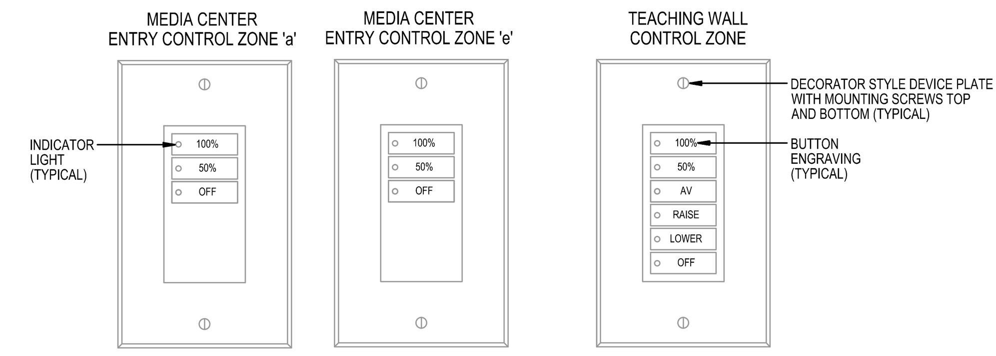

SWITCH TYPE: S_{L3a}

SWITCH TYPE: S_{L3e}

SWITCH TYPE: S_{L6e}, S_{L6g}

CONTROL SCHEME APPLIES TO THE FOLLOWING TYPICAL SPACES:

MEDIA CENTER.

OPERATIONAL SEQUENCE:

A. INITIAL ENTRY INTO SPACE SHALL REQUIRE MANUAL ACTIVATION OF LIGHTING FIXTURES THROUGH LOCAL LIGHTING CONTROL STATION.
B. LIGHTING CONTROL STATIONS SHALL PROVIDE THE SCENES AS SHOWN ABOVE. SCENES ARE DEFINED AS:

ENTRY CONTROL ZONE 'a'
1. 100%: DAYLIGHT ZONES 'a', 'b', 'c', AND 'd' LIGHTING FIXTURES SHALL TURN ON TO 100% LIGHT OUTPUT. DAYLIGHT ZONES SHALL MAINTAIN 50 FOOT-CANDLES ON THE WORKPLANE.
2. 50%: DAYLIGHT ZONES 'a', 'b', 'c', AND 'd' LIGHTING FIXTURES SHALL TURN ON TO 50% LIGHT OUTPUT. DAYLIGHT ZONES SHALL MAINTAIN 25 FOOT-CANDLES ON THE WORKPLANE.
3. OFF: DAYLIGHT ZONES 'a', 'b', 'c', AND 'd' LIGHTING FIXTURES SHALL TURN OFF.

ENTRY CONTROL ZONE 'e'
1. 100%: ZONES 'e', 'f', 'g', AND 'h' LIGHTING FIXTURES SHALL TURN ON TO 100% LIGHT OUTPUT.
2. 50%: ZONES 'e', 'f', 'g', AND 'h' LIGHTING FIXTURES SHALL TURN ON TO 50% LIGHT OUTPUT.
3. OFF: ZONES 'e', 'f', 'g', AND 'h' LIGHTINGFIXTURES SHALL TURN OFF.
4. MANUAL RAISE/LOWER BUTTONS SHALL RAISE AND LOWER LIGHT OUTPUT OF ZONE 'b' LIGHTING FIXTURES.

TEACHING CONTROL ZONE 'e'
1. 100%: ZONE 'e' AND ZONE 'f' LIGHTING FIXTURES SHALL TURN ON TO 100% LIGHT OUTPUT.
2. 50%: ZONE 'e' AND ZONE 'f' LIGHTING FIXTURES SHALL TURN ON TO 50% LIGHT OUTPUT.
3. AV: ZONE 'e' LIGHTING FIXTURES SHALL TURN OFF AND ZONE 'f' LIGHTING FIXTURES SHALL TURN ON TO 50% LIGHT OUTPUT.
4. MANUAL RAISE/LOWER BUTTONS SHALL RAISE AND LOWER THE ZONE(S). IF A ZONE IS TURNED OFF, IT SHALL REMAIN OFF.
5. OFF: ZONE 'e' AND ZONE 'f' LIGHTING FIXTURES SHALL TURN OFF.

TEACHING CONTROL ZONE 'g'
1. 100%: ZONE 'g' AND ZONE 'h' LIGHTING FIXTURES SHALL TURN ON TO 100% LIGHT OUTPUT.
2. 50%: ZONE 'g' AND ZONE 'h' LIGHTING FIXTURES SHALL TURN ON TO 50% LIGHT OUTPUT.
3. AV: ZONE 'g' LIGHTING FIXTURES SHALL TURN OFF AND ZONE 'h' LIGHTING FIXTURES SHALL TURN ON TO 50% LIGHT OUTPUT.
4. MANUAL RAISE/LOWER BUTTONS SHALL RAISE AND LOWER THE ZONE(S). IF A ZONE IS TURNED OFF, IT SHALL REMAIN OFF.
5. OFF: ZONE 'g' AND ZONE 'h' LIGHTING FIXTURES SHALL TURN OFF.

C. WHEN OCCUPANCY IS NOT DETECTED FOR 15 MINUTES, LIGHTING FIXTURES SHALL TURN OFF. MANUAL REACTIVATION SHALL BE REQUIRED.

OCCUPANCY STATUS FOR HVAC CONTROLS:

X. ANY OCCUPANCY SENSOR WITHIN THE SPACE SHALL HAVE AN INTERFACE (AUXILIARY CONTACTS) TO SIGNAL OCCUPANCY STATUS TO HVAC CONTROLS.
Y. CONTACTS SHALL CLOSE UPON DETECTION OF OCCUPANCY.
Z. AFTER 5 SECONDS OF UNDETECTED OCCUPANCY, CONTACTS SHALL OPEN.

10 / E-7.5 DIAGRAM
LIGHTING CONTROLS SCHEME 'L10'
NO SCALE

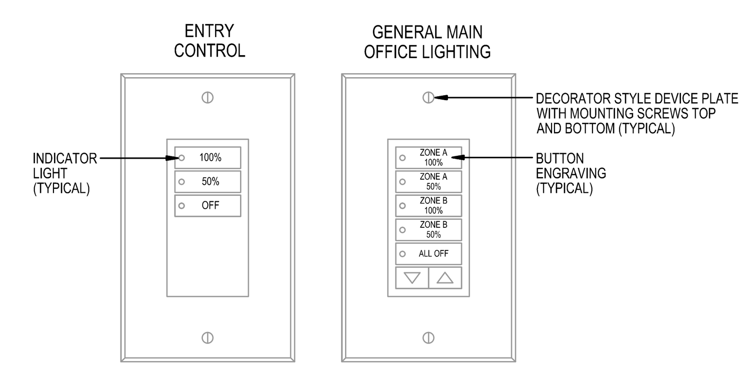

SWITCH TYPE: S_{L3}

SWITCH TYPE: S_{L5D} (MAIN OFFICE ONLY)

CONTROL SCHEME APPLIES TO THE FOLLOWING TYPICAL SPACES:

WAITING/SEATING AREAS

OPERATIONAL SEQUENCE:

A. LIGHTING FIXTURES SHALL TURN ON TO 50% LIGHT OUTPUT ONCE OCCUPANCY IS DETECTED.
B. LIGHTING CONTROL STATIONS SHALL PROVIDE THE SCENES AS SHOWN ABOVE. SCENES ARE DEFINED AS:

ENTRY CONTROL
1. 100%: LIGHTING FIXTURES SHALL TURN ON TO 100% LIGHT OUTPUT.
2. 50%: LIGHTING FIXTURES SHALL TURN ON TO 50% LIGHT OUTPUT.
3. OFF: LIGHTING FIXTURES SHALL TURN OFF.

GENERAL MAIN OFFICE LIGHTING (MAIN OFFICE ONLY)
4. ZONE A 100%: LIGHTING FIXTURES IN ZONE 'a' SHALL TURN ON TO 100% LIGHT OUTPUT.
5. ZONE A 50%: LIGHTING FIXTURES IN ZONE 'a' SHALL TURN ON TO 50% LIGHT OUTPUT.
6. ZONE B 100%: LIGHTING FIXTURES IN ZONE 'b' SHALL TURN ON TO 100% LIGHT OUTPUT.
7. ZONE B 50%: LIGHTING FIXTURES IN ZONE 'b' SHALL TURN ON TO 50% LIGHT OUTPUT.
8. ALL OFF: LIGHTING FIXTURES IN ZONE 'a' AND ZONE 'b' SHALL TURN OFF.
9. MANUAL RAISE/LOWER BUTTONS: SHALL RAISE AND LOWER LIGHT OUTPUT OF LIGHTING FIXTURES IN ZONE "b".

C. WHEN OCCUPANCY IS NOT DETECTED FOR 15 MINUTES, LIGHTING FIXTURES SHALL TURN OFF.

11 / E-7.5 DIAGRAM
LIGHTING CONTROLS SCHEME 'L11'
NO SCALE

CONTROL SCHEME APPLIES TO THE FOLLOWING TYPICAL SPACES:

EXTERIOR BUILDING-MOUNTED LIGHTING, AND PARKING LOT LIGHTING.

OPERATIONAL SEQUENCE:

A. EXTERIOR LIGHTING:

EXTERIOR BUILDING MOUNTED LIGHTING:
1. AT DUSK, PHOTOCELL SHALL TURN ON LIGHTING FIXTURES TO 100% LIGHT OUTPUT.
2. AT DAWN, PHOTOCELL SHALL TURN OFF LIGHTING FIXTURES.

PARKING LOT LIGHTING:
1. AT DUSK, PHOTOCELL SHALL TURN ON LIGHTING FIXTURES TO 100% LIGHT OUTPUT.
2. LIGHTING FIXTURES SHALL TURN OFF AT MIDNIGHT OR TIME COORDINATED WITH THE OWNER.

12 / E-7.5 DIAGRAM
LIGHTING CONTROLS SCHEME 'L12'
NO SCALE

SWITCH TYPE: S OR S_T OR S_3

CONTROL SCHEME APPLIES TO THE FOLLOWING TYPICAL SPACES:

MECHANICAL AND ELECTRICAL SPACES, KITCHEN/FOOD PREP SPACES, AND ELEVATOR EQUIPMENT ROOM.

OPERATIONAL SEQUENCE:

A. INITIAL ENTRY INTO THE SPACE SHALL REQUIRE MANUAL ACTIVATION OF FIXTURES THROUGH LOCAL LINE-VOLTAGE TOGGLE SWITCH.

13 / E-7.5 DIAGRAM
LIGHTING CONTROLS SCHEME 'L13'
NO SCALE

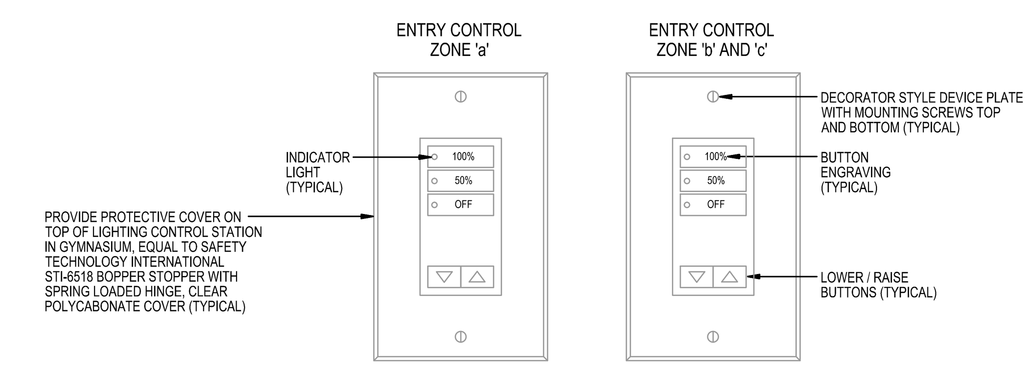

SWITCH TYPE: S_{L5a}

SWITCH TYPE: S_{L5b}

CONTROL SCHEME APPLIES TO THE FOLLOWING TYPICAL SPACES:

GYMNASIUM

OPERATIONAL SEQUENCE:

A. LIGHTING FIXTURES SHALL PROVIDE 30% LIGHT OUTPUT AFTER OCCUPANCY IS DETECTED.
B. LIGHTING CONTROL STATIONS SHALL PROVIDE THE SCENES AS SHOWN ABOVE. SCENES ARE DEFINED AS:

ENTRY CONTROL ZONE 'a':
1. 100%: DAYLIGHT ZONE 'a' SHALL TURN ON LIGHTING FIXTURES TO 100% LIGHT OUTPUT. ZONE 'a' SHALL TURN ON LIGHTING FIXTURES TO 100% LIGHT OUTPUT. DAYLIGHT ZONES SHALL MAINTAIN 50 FOOT-CANDLES ON THE WORKPLANE.
2. 50%: DAYLIGHT ZONE 'a' SHALL TURN ON LIGHTING FIXTURES TO 50% LIGHT OUTPUT. ZONE 'a' SHALL TURN ON LIGHTING FIXTURES TO 50% LIGHT OUTPUT. DAYLIGHT ZONES SHALL MAINTAIN 25 FOOT-CANDLES ON THE WORKPLANE.
3. MANUAL RAISE BUTTON SHALL RAISE LIGHT OUTPUT OF THE LIGHTING FIXTURES IN THE ZONE UNTIL LIGHTING FIXTURES REACH 100% LIGHT OUTPUT.
4. MANUAL LOWER BUTTON SHALL LOWER LIGHT OUTPUT OF THE LIGHTING FIXTURES IN THE ZONE. IF A ZONE IS TURNED OFF, IT SHALL REMAIN OFF.
5. OFF: DAYLIGHT ZONE 'a' LIGHTING FIXTURES SHALL TURN OFF.

ENTRY CONTROL ZONE 'b' AND 'c':
1. 100%: DAYLIGHT ZONE 'b' AND ZONE 'c' SHALL TURN ON LIGHTING FIXTURES TO 100% LIGHT OUTPUT. ZONE 'b' SHALL TURN ON LIGHTING FIXTURES TO 100% LIGHT OUTPUT. DAYLIGHT ZONES SHALL MAINTAIN 50 FOOT-CANDLES ON THE WORKPLANE.
2. 50%: DAYLIGHT ZONE 'b' AND ZONE 'c' SHALL TURN ON LIGHTING FIXTURES TO 50% LIGHT OUTPUT. ZONE 'b' SHALL TURN ON LIGHTING FIXTURES TO 50% LIGHT OUTPUT. DAYLIGHT ZONES SHALL MAINTAIN 25 FOOT-CANDLES ON THE WORKPLANE.
3. MANUAL RAISE BUTTON SHALL RAISE LIGHT OUTPUT OF THE LIGHTING FIXTURES IN THE ZONE UNTIL LIGHTING FIXTURES REACH 100% LIGHT OUTPUT.
4. MANUAL LOWER BUTTON SHALL LOWER LIGHT OUTPUT OF THE LIGHTING FIXTURES IN THE ZONE. IF A ZONE IS TURNED OFF, IT SHALL REMAIN OFF.
5. OFF: DAYLIGHT ZONE 'b' AND ZONE 'c' LIGHTING FIXTURES SHALL TURN OFF.

C. IF OCCUPANCY IS NOT DETECTED FOR 15 MINUTES, LIGHTING FIXTURES SHALL TURN OFF UNTIL OCCUPANCY IS DETECTED.

OCCUPANCY STATUS FOR HVAC CONTROLS:

X. ANY OCCUPANCY SENSOR WITHIN THE SPACE SHALL HAVE AN INTERFACE (AUXILIARY CONTACTS) TO SIGNAL OCCUPANCY STATUS TO HVAC CONTROLS.
Y. CONTACTS SHALL CLOSE UPON DETECTION OF OCCUPANCY.
Z. AFTER 5 SECONDS OF UNDETECTED OCCUPANCY, CONTACTS SHALL OPEN.

14 / E-7.5 DIAGRAM
LIGHTING CONTROLS SCHEME 'L14'
NO SCALE

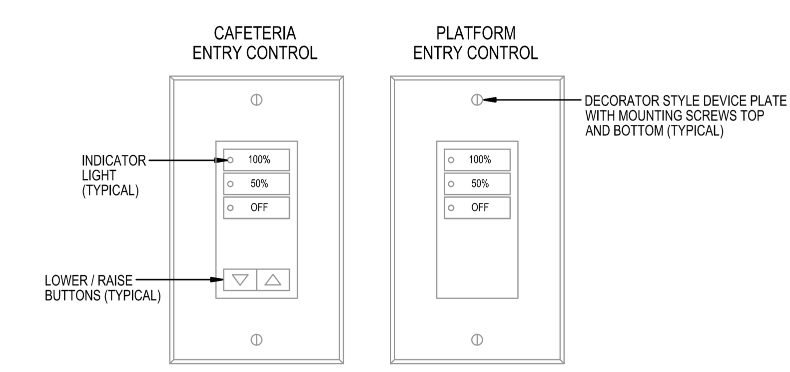

SWITCH TYPE: S_{L5}

SWITCH TYPE: S_{L3A}

CONTROL SCHEME APPLIES TO THE FOLLOWING TYPICAL SPACES:

CAFETERIA AND PLATFORM.

OPERATIONAL SEQUENCE:

A. INITIAL ENTRY INTO SPACE SHALL REQUIRE MANUAL ACTIVATION OF LIGHTING FIXTURES THROUGH LOCAL LIGHTING CONTROL STATION.
B. ENTRY LIGHTING CONTROL STATION SHALL CONTROL LIGHTING FIXTURES IN THE SPACE, EXCEPT TRACK LIGHTING.
C. WALL STATION SHALL PROVIDE THE SCENES AS SHOWN ABOVE. SCENES ARE DEFINED AS:

CAFETERIA ENTRY CONTROL
1. 100%: ZONES 'a', 'b' & 'c' LIGHTING FIXTURES SHALL TURN ON TO 100% LIGHT OUTPUT.
2. 50%: ZONES 'a', 'b' & 'c' LIGHTING FIXTURES SHALL TURN ON TO 50% LIGHT OUTPUT.
3. MANUAL RAISE BUTTON SHALL RAISE LIGHT OUTPUT OF THE LIGHTING FIXTURES IN ZONES 'a', 'b' & 'c' UNTIL LIGHTING FIXTURES REACH 100% LIGHT OUTPUT.
4. MANUAL LOWER BUTTON SHALL LOWER LIGHT OUTPUT OF THE LIGHTING FIXTURES IN ZONES 'a', 'b' & 'c'. IF ZONES ARE TURNED OFF, ZONES SHALL REMAIN OFF.
5. OFF: LIGHTING FIXTURES SHALL TURN OFF.

PLATFORM ENTRY CONTROL
1. 100%: ZONE 'd' LIGHTING FIXTURES SHALL TURN ON TO 100% LIGHT OUTPUT.
2. 50%: ZONE 'd' LIGHTING FIXTURES SHALL TURN ON TO 50% LIGHT OUTPUT.
3. OFF: ZONE 'd' LIGHTING FIXTURES SHALL TURN OFF.

D. WHEN OCCUPANCY IS NOT DETECTED FOR 15 MINUTES, LIGHTING FIXTURES SHALL TURN OFF. MANUAL REACTIVATION SHALL BE REQUIRED.

OCCUPANCY STATUS FOR HVAC CONTROLS:

X. ANY OCCUPANCY SENSOR WITHIN THE SPACE SHALL HAVE AN INTERFACE (AUXILIARY CONTACTS) TO SIGNAL OCCUPANCY STATUS TO HVAC CONTROLS.
Y. CONTACTS SHALL CLOSE UPON DETECTION OF OCCUPANCY.
Z. AFTER 5 SECONDS OF UNDETECTED OCCUPANCY, CONTACTS SHALL OPEN.

15 / E-7.5 DIAGRAM
LIGHTING CONTROLS SCHEME 'L15'
NO SCALE

James Posey Associates
Engineering Your Vision
Mechanical & Electrical Engineers
jamesposey.com
tel 410-265-6100
fax 410-298-9820
3112 Lord Baltimore Drive
Baltimore, MD 21244

Professional Certification. I hereby certify that these documents were prepared or approved by me, and that I am a duly licensed professional engineer under the laws of the state of Maryland, License No. 24861, Expiration date: 02-24-2018.

JPA PROJECT NO. 6542-15

11720 Beltsville Drive
Suite 600
Calverton, MD 20705
Tel: 301.595.1000
www.grimmandparker.com
G+P GRIMM AND PARKER

GP #21541

LIGHTING CONTROLS DIAGRAMS

LANSDOWNE ELEMENTARY SCHOOL
2301 ALMA ROAD, BALTIMORE, MD

DATE	DESCRIPTION

E-7.5

11/17/16
BID SET

© GRIMM AND PARKER, P.C. 2014
© 2016 James Posey Associates, Inc.

© GRIMM AND PARKER, P.C. 2014

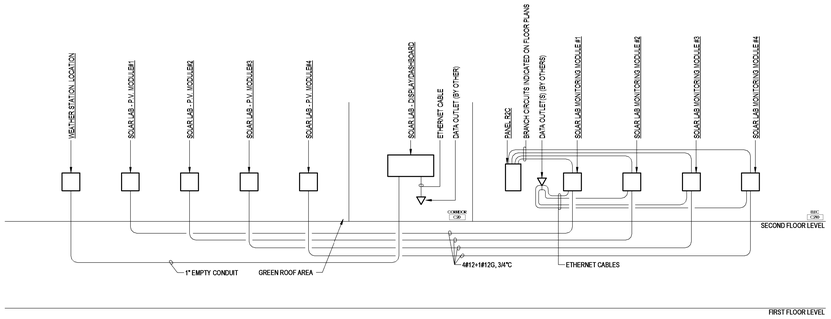

1 / E-8.1 **DIAGRAM**

SOLAR LAB - INTERCONNECTION DIAGRAM

NO SCALE

BASE BID: PROVIDE ONLY EMPTY CONDUITS TO/FROM LOCATIONS OF DEVICES INDICATED. PROVIDE PULL CORDS FOR ENTIRE LENGTH OF CONDUIT RUN(S).

ALTERNATE #3: PROVIDE ENTIRE SYSTEM AS INDICATED.

SPECIFIC NOTES:

1. SOLAR LAB - P.V. MODULE #1
   - P.V. ARRAY: SUNIVA #OPT 265
   - MICROINVERTER: ENPHASE M215 OR EQUAL
   - MOUNT MICROINVERTER IN NEMA 4X ENCLOSURE
   - MOUNTING STRUCTURE: REFER TO DETAIL 11/E5.2
2. SOLAR LAB - P.V. MODULE #2
   - P.V. ARRAY: SUNIVA #OPT 265
   - MICROINVERTER: ENPHASE M215 OR EQUAL
   - MOUNT MICROINVERTER IN NEMA 4X ENCLOSURE
   - MOUNTING STRUCTURE: REFER TO DETAIL 11/E5.2
3. SOLAR LAB - P.V. MODULE #3
   - P.V. ARRAY: SUNIVA #OPT 265
   - MICROINVERTER: ENPHASE M215 OR EQUAL
   - MOUNT MICROINVERTER IN NEMA 4X ENCLOSURE
   - MOUNTING STRUCTURE: REFER TO DETAIL 11/E5.2
4. SOLAR LAB - P.V. MODULE #4
   - P.V. ARRAY: SUNIVA #OPT 265
   - MICROINVERTER: ENPHASE M215 OR EQUAL
   - MOUNT MICROINVERTER IN NEMA 4X ENCLOSURE
   - MOUNTING STRUCTURE: REFER TO DETAIL 12/E5.2

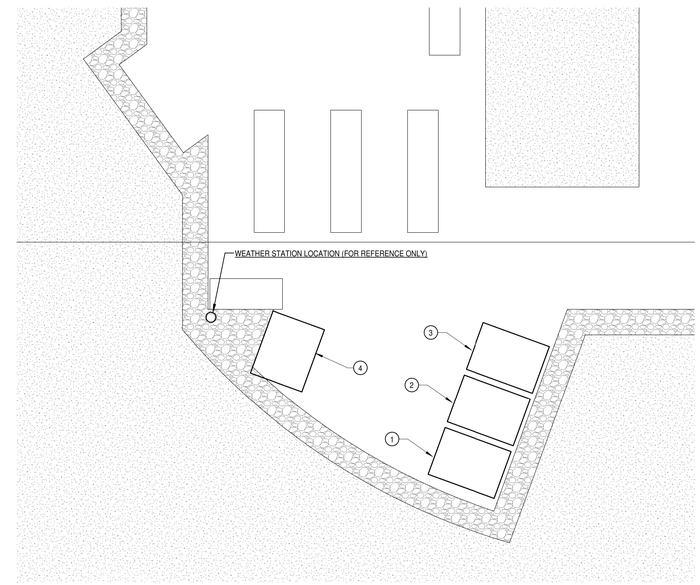

2 / E-8.1 **ROOF PLAN - ALTERNATE**

SCALE: 1/4" = 1'-0"

James Posey Associates
Engineering your vision
Mechanical & Electrical Engineers
jamesposey.com
3112 Lord Baltimore Drive
Baltimore, MD 21244
tel 410-265-6100
fax 410-298-9820

Professional Certification. I hereby certify that these documents were prepared or approved by me, and that I am a duly licensed professional engineer under the laws of the state of Maryland. License No. 28401. Expiration date: 02-24-2018.

JPA PROJECT NO. 5648-15

GRIMM AND PARKER
11720 Beltsville Drive
Suite 600
Calverton, MD 20705
Tel: 301.595.1000
www.grimmandparker.com

GP #21541

ALTERNATES

LANSDOWNE ELEMENTARY SCHOOL
2301 ALMA ROAD, BALTIMORE, MD

DATE	DESCRIPTION

KEYPLAN
NOT TO SCALE

NORTH

8 4 0 8 16
SCALE: 1/8" = 1'-0"

E-8.1

11/17/16
BID SET

© 2016 James Posey Associates, Inc.

© GRIMM AND PARKER, P.C. 2014

GENERAL NOTES:

1. GENERAL NOTES ON THIS DRAWING SHALL APPLY TO ALL TECHNOLOGY DRAWINGS ON THIS PROJECT. CAREFULLY READ ALL GENERAL NOTES PRIOR TO COMMENCEMENT OF WORK.
2. ANY MATERIALS & DEVICES NOT SPECIFICALLY MENTIONED IN THESE SPECIFICATIONS OR INDICATED ON THESE CONTRACT DRAWINGS THAT ARE REQUIRED FOR A COMPLETE FINISHED AND OPERATING SYSTEM INSTALLATION SHALL BE PROVIDED BY THE CONTRACTOR AT NO ADDITIONAL COST TO THE OWNER.
3. WHERE THE TERM "PROVIDE" IS USED ON THE DRAWINGS, IT SHALL BE DEFINED AS FOLLOWS: FURNISH, INSTALL, & MAKE ALL FINAL CONNECTIONS FOR THE EQUIPMENT INDICATED.
4. CABLE ROUTES ILLUSTRATED ARE DIAGRAMMATIC. EXACT ROUTING SHALL BE DETERMINED IN FIELD BY THE CONTRACTOR & DOCUMENTED FOR FUTURE REFERENCE BY THE OWNER.
5. ALL WORK SHALL BE IN ACCORDANCE WITH THE LATEST EDITION OF THE NATIONAL ELECTRICAL CODE & LOCAL AMENDMENTS.
6. REFER TO ELECTRICAL DRAWINGS & DIVISION 16 SPECIFICATIONS FOR ELECTRICAL ROUGH-IN, CONDUITS & BOXES. ANY CONDUIT, BOXES, & ASSOCIATED ROUGH-IN NOT INCLUDED IN DIVISION 26 SHALL BE PROVIDED UNDER DIVISION 27.

ABBREVIATIONS:

A	AMPERE, AMPERES
AMP	AMPERE, AMPERES
AFF	ABOVE FINISHED FLOOR
AFG	ABOVE FINISHED GRADE
AIC	AMPERE INTERRUPTING CAPACITY
AWG	AMERICAN WIRE GAUGE
C	CONDUIT
CAP	CAPACITY
CB	CIRCUIT BREAKER
CKT	CIRCUIT
CND	CONDUIT
COMP	COMPUTER
CTX	CONNECT TO EXISTING
DIA	DIAMETER
DWG	DRAWING
EC	ELECTRICAL CONTRACTOR
ETR	EXISTING TO REMAIN
EWC	ELECTRIC WATER COOLER
EX	EXISTING
EXIST	EXISTING
FACP	FIRE ALARM CONTROL PANEL
FLA	FULL LOAD AMPERES
FRM	FRAME
GFI	GROUND FAULT INTERRUPTING
G	GROUND
GND	GROUND
IDF	INTERMEDIATE DISTRIBUTION FRAME
IMC	INTERMEDIATE METAL CONDUIT
KCMIL	THOUSAND CIRCULAR MILS
KVA	KILOVOLT-AMPERES
KW	KILOWATT
LRA	LOCKED ROTOR AMPERES
MCA	MINIMUM CIRCUIT AMPACITY
MCB	MAIN CIRCUIT BREAKER
MCP	MOTOR CIRCUIT PROTECTOR
MDF	MAIN DISTRIBUTION FRAME
MDP	MAIN DISTRIBUTION PANEL
MFS	MAXIMUM FUSE SIZE
MH	MOUNTING HEIGHT/MANHOLE
MIN	MINIMUM
MLO	MAIN LUGS ONLY
MTD	MOUNTED
NEC	NATIONAL ELECTRICAL CODE
NEMA	NATIONAL ELECTRICAL MANUFACTURER'S ASSOCIATION
NFSS	NONFUSED SAFETY SWITCH
NIC	NOT IN CONTRACT
NO	NUMBER
OC	ON CENTER
P	POLE, POLES
Ø	PHASE
PNL	PANEL
PVC	POLYVINYL CHLORIDE
REC	RECEPTACLE
RECEPT	RECEPTACLE
RGS	RIGID GALVANIZED STEEL
RM	ROOM
RX	REMOVE EXISTING
TTB	TELEPHONE TERMINAL BOARD
TYP	TYPICAL
TTB	TELEPHONE TERMINAL BOARD
UG	UNDERGROUND
UON	UNLESS OTHERWISE NOTED
UPS	UNINTERRUPTABLE POWER SUPPLY
V	VOLT, VOLTS
W	WATTSWIRE, WIRES
WG	WIREGUARD
WP	WEATHERPROOF
XFMR	TRANSFORMER

TECHNOLOGY LEGEND:

NOTE: ALL MOUNTING HEIGHTS AND LOCATIONS OF EQUIPMENT SHALL BE COORDINATED IN THE FIELD BY THE CONTRACTOR PRIOR TO ROUGH-IN.

DATA

- DATA OUTLET: SUBSCRIPT DENOTES QUANTITY. M.H. 18" AFF. SEE DETAILS 4/T-5.2
- DATA OUTLET CEILING MOUNTED - REFER TO DETAILS 11,12/T-5.2.
- INTERCOM ADMIN TELEPHONE CONSOLE AND OUTLET
- WIRELESS DATA OUTLET ABOVE CEILING DATA OUTLET WITH 10 FEET OF CAT 6 CABLING COILED ABOVE CEILING FOR CONNECTION TO WIRELESS ACCESS POINT (BY OWNER'S VENDOR) REFER TO DETAIL 11,12/T-5.2.
- EXTERIOR WIRELESS DATA OUTLET IN RECESS CD J-BOX.
- FLOOR BOX WITH DATA OUTLET
- TELEPHONE OUTLET: M.H. 18" AFF. SEE DETAILS ON DRAWING T-5.2.
- PROJECT LOW/HIGH OUTLET. SEE DETAILS ON DRAWING T-5.2. PROVIDE CEILING MOUNT PROJECTOR HIGH OUTLET UNDER BASE BID. PROVIDE WALL MOUNT PROJECTOR OUTLET FOR INTERACTIVE WHITE BOARD UNDER ALTERNATE. REFER TO DETAIL THIS SHEET FOR ADDITIONAL INFORMATION.
- WALL MOUNTED 12" WIDE BY 4" DEEP BASKET TYPE CABLE TRAY AND CLEARANCE SPACE. MOUNTING HEIGHT SHALL BE 3" TO BOTTOM OF TRAY ABOVE LAY-IN CEILING UNLESS OTHERWISE NOTED. REFER TO ARCHITECTURAL REFLECTED CEILING PLANS FOR CEILING HEIGHTS.
- VIDEO OUTLET. SEE DETAILS ON DRAWING T-5.2.
- EQUIPMENT RACK/CABINET.
- ADMINISTRATIVE DROP
- HANDHOLE/EXTERIOR J-BOX - REFER TO DETAIL 2/T-0.2
- PULLBOX: SIZE AS INDICATED
- JUNCTION BOX, WALL MOUNTED
- CONDUIT, CONDUIT SLEEVE - SIZE AND QUANTITY AS INDICATED.
- JUNCTION BOX

SECURITY

- SECURITY SYSTEM SIREN - CEILING MOUNTED.
- DOOR CONTACTS
- CEILING/FIXED MOUNTED CCTV CAMERA. SEE DETAILS & SCHEDULE ON DRAWING T-5.4.
- WALL MOUNTED CCTV CAMERA. SEE DETAILS AND SCHEDULE ON DRAWING T-5.4.
- CORNER WALL MOUNTED CCTV CAMERA. SEE DETAILS AND SCHEDULE ON DRAWING T-5.4.
- PAN/TILT/ZOOM CCTV CAMERA. SEE DETAILS AND SCHEDULE ON DRAWING T-5.4.
- CCTV CAMERA POWER SUPPLY
- SECURITY SYSTEM KEYPAD; MOUNT AT 4'-0" AFF.
- CARD READER
- VIDEO DOOR STATION
- VIDEO ENTRY MASTER DOOR CONTROL STATION
- CARD READER - REFER TO ACCESS CONTROL SYSTEM CARD READER DETAIL - SHEET T-5.4. FOR ADDITIONAL INFORMATION.
- MOTION DETECTOR

SOUND SYSTEM

- VOLUME CONTROL. WALL MOUNTED AT 4'-0" AFF UON.
- MICROPHONE OUTLET; DESKTOP, WALL MOUNTED AT 1'-6" AFF UON # INDICATES QUANTITY OF MICROPHONE JACKS IN FACE PLATE SEE DETAILS ON DRAWING T-5.4.
- MICROPHONE FLOOR BOX OUTLET
- SOUND SYSTEM AUXILIARY INPUT JACK & MICROPHONE INPUT JACK COMBO; MOUNT AT 1'-6" AFF UON. SEE DETAIL 8/T-5.2.
- SPEAKER; CEILING MOUNTED, WALL MOUNTED AT 7'-6" AFF UON WP - WEATHERPROOF, H - HORN TYPE, V - INTEGRAL VOLUME CONTROL, P - HIGH PERFORMANCE TYPE
- CLOCK; WALL MOUNTED; CEILING MOUNTED; SUBSCRIPT "D" INDICATES DOUBLE FACE; WALL MOUNTED CLOCKS WITH SUBSCRIPT "D" SHALL BE CANTILEVER MOUNTED @ 7'-6" AFF; WALL MOUNTED CLOCKS WITH NO SUBSCRIPT SHALL BE SINGLE FACE SEMI-RECESSED; MOUNTED @ 7'-6" AFF. ALL CLOCKS SHALL BE DIGITAL TYPE (UON). SUBSCRIPT "WG" INDICATES WIREGUARD.

MISCELLANEOUS:

- DENOTES REFERENCE TO DRAWING NOTE
- DENOTES REFERENCE TO REVISIONS TO DRAWING

CONVENTIONS:

- DETAIL NUMBER
- DRAWING NUMBER WHERE DETAIL IS LOCATED
- #/E#.# DETAIL REFERENCE: DETAIL NUMBER/DRAWING NUMBER

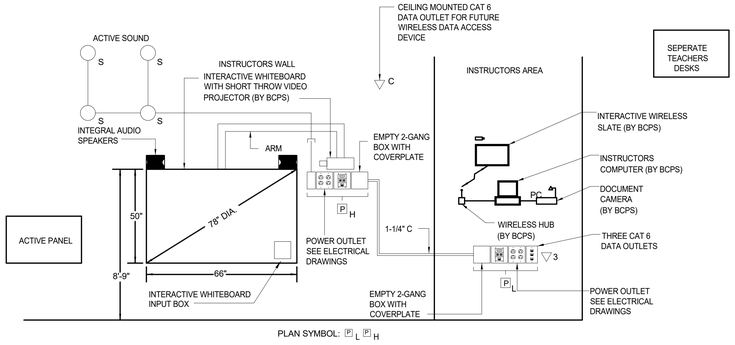

INTERACTIVE WHITEBOARD PROVISIONS DETAIL

Professional Certification:
I hereby certify that these documents were prepared or approved by me, & I am a duly licensed professional engineer under the laws of the State of Maryland License No. 22088, Expiration: 10-14-2016

Wright Engineering, LLC
Consulting Engineers
853 Ripple Stream Court
Joppa, MD 21085
P (410) 877-6297 F (866) 635-0374
www.wrightengineering.net

11720 Beltsville Drive
Suite 600
Calverton, MD 20705
Tel: 301.595.1000
www.grimmandparker.com

GRIMM AND PARKER

GP #21541

SYMBOLS, LEGENDS AND ABBREVIATIONS - TELECOM

LANSDOWNE ELEMENTARY SCHOOL
2301 ALMA ROAD, BALTIMORE, MD

DATE	DESCRIPTION

T-0.1

11/17/16
BID SET

© GRIMM AND PARKER, P.C. 2014

© GRIMM AND PARKER, P.C. 2014

DRAWING NOTES:

1. 4-WAY 4" PVC CONCRETE ENCASED COMMUNICATIONS DUCTBANK.
2. PROVIDE 1" CONDUIT FROM SIGN TO IDF.
3. PROVIDE EXTERIOR JUNCTION BOX/HANDHOLE. REFER TO DETAIL #2 THIS SHEET.
4. COORDINATE EXACT LOCATION WITH TELEPHONE AND CABLE TV UTILITIES.

GENERAL NOTES:

1. INFORMATION SHOWN ON THIS DRAWING PERTAINING TO EXISTING CONDITIONS HAS BEEN OBTAINED FROM AVAILABLE BUILDING DRAWINGS OR GENERAL FIELD OBSERVATIONS AND MAY NOT INDICATE ACTUAL EXISTING CONDITIONS IN DETAIL OR DIMENSION. THE CONTRACTOR IS RESPONSIBLE FOR DETERMINING THE ACTUAL EXISTING CONDITIONS PRIOR TO FABRICATION OR PERFORMANCE OF ANY WORK. SHOULD CONDITIONS BE DISCOVERED THAT PREVENT EXECUTION OF THE OF THE WORK AS INDICATED, THE CONTRACTOR SHALL IMMEDIATELY NOTIFY THE ARCHITECT IN WRITING AND AWAIT DIRECTION BEFORE PROCEEDING WITH THE WORK.

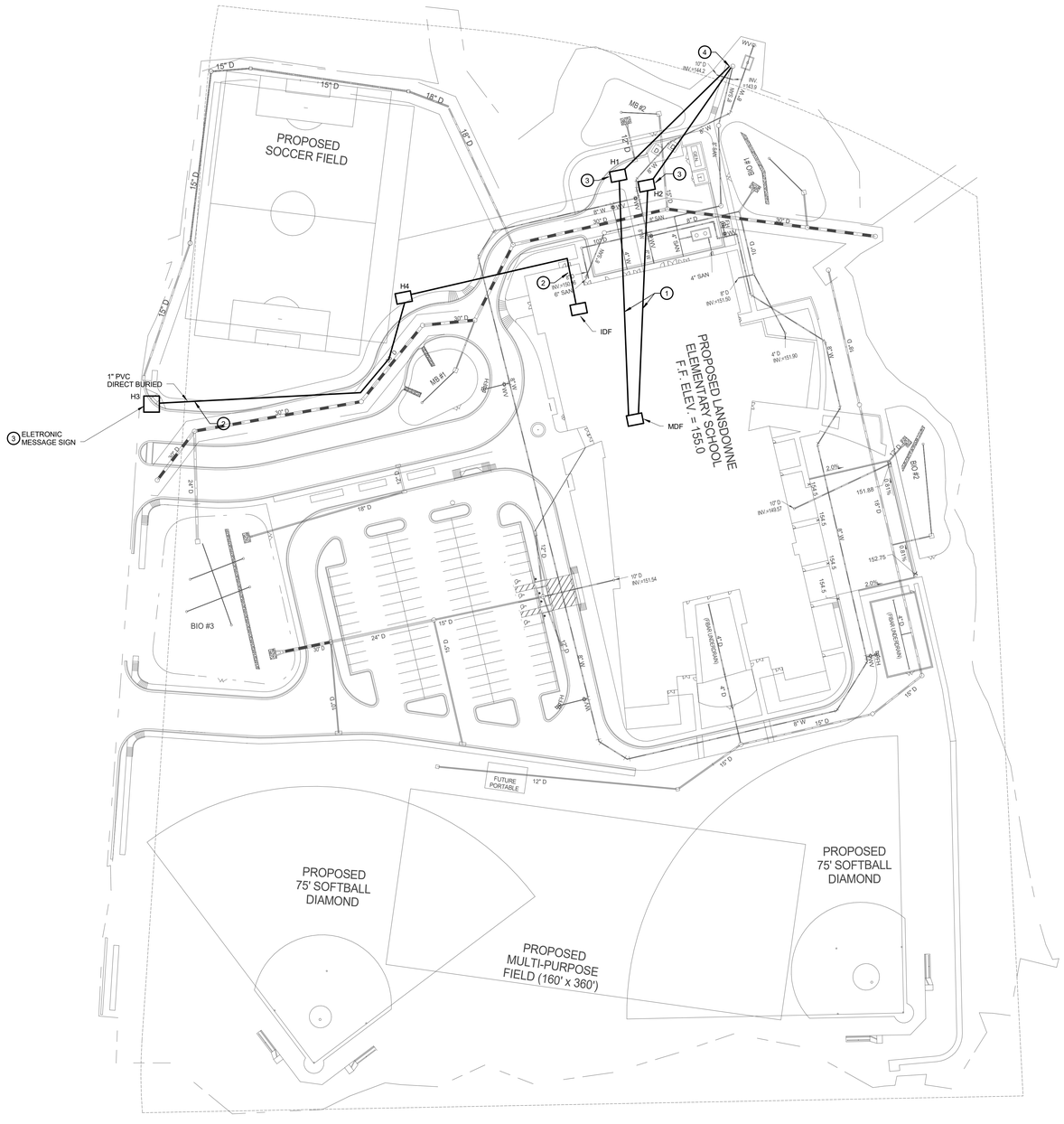

1 SITE PLAN - TELECOM
1" = 50'-0"

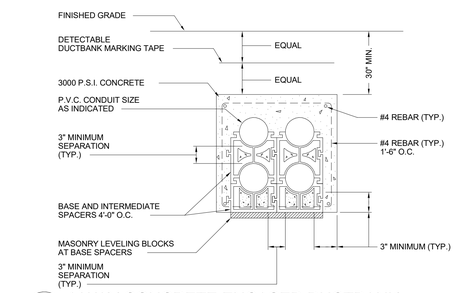

1 4-WAY CONCRETE ENCASED DUCTBANK
NO SCALE

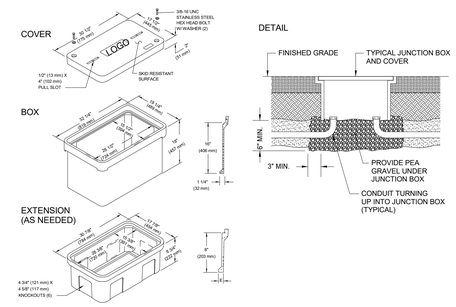

2 EXTERIOR JUNCTION BOX DETAIL
NO SCALE

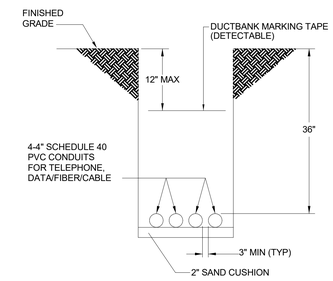

NOTE: COORDINATE EXCAVATION OF TRENCH AND INSTALLATION OF CONDUITS WITH UTILITY COMPANIES IN ADVANCE.

3 TRENCH DETAIL - INCOMING SERVICES
NO SCALE

0 50 75 100 150

STATE OF MARYLAND JAMES WALLIS WRIGHT No. 22868 PROFESSIONAL ENGINEER

Professional Certification:
I hereby certify that these documents were prepared or approved by me, & I am a duly licensed professional engineer under the laws of the State of Maryland License No. 22868, Expiration: 10-14-2016

Wright Engineering, LLC
Consulting Engineers
853 Ripple Stream Court
Joppa, MD 21085
P (410) 877-6297 F (866) 635-0374
www.wrightengineering.net

PROFESSIONAL ENGINEERING SERVICES ONLY
THIS PLAN IS NOT INTENDED FOR CONSTRUCTION PURPOSES UNTIL IT IS SIGNED AND SEALED BY THE ENGINEER RESPONSIBLE FOR ITS PREPARATION.

11720 Beltsville Drive
Suite 600
Calverton, MD 20705
Tel: 301.595.1000
www.grimmandparker.com

GRIMM AND PARKER
GP #21541

SITE PLAN - TELECOM
LANSDOWNE ELEMENTARY SCHOOL
2301 ALMA ROAD, BALTIMORE, MD

DATE	DESCRIPTION

T-0.2
09/29/16
BID SET

© GRIMM AND PARKER, P.C. 2014

© GRIMM AND PARKER, P.C. 2014

KEYED NOTES:

1. PROVIDE WALL MOUNTED SECURITY CAMERA 42" MONITOR, BRACKET, AND OUTLET.
2. CONNECT TO SYSTEMS FURNITURE.
3. MOUNT ABOVE COUNTER.
4. PROVIDE INTERCOM DIGITAL DISPLAY MOUNT 12" BELOW CEILING.
5. PROVIDE INTERCOM ADMIN TELEPHONE CONSOLE AND OUTLET.
6. PROVIDE DESKTOP MICROPHONE AND MIC OUTLET.

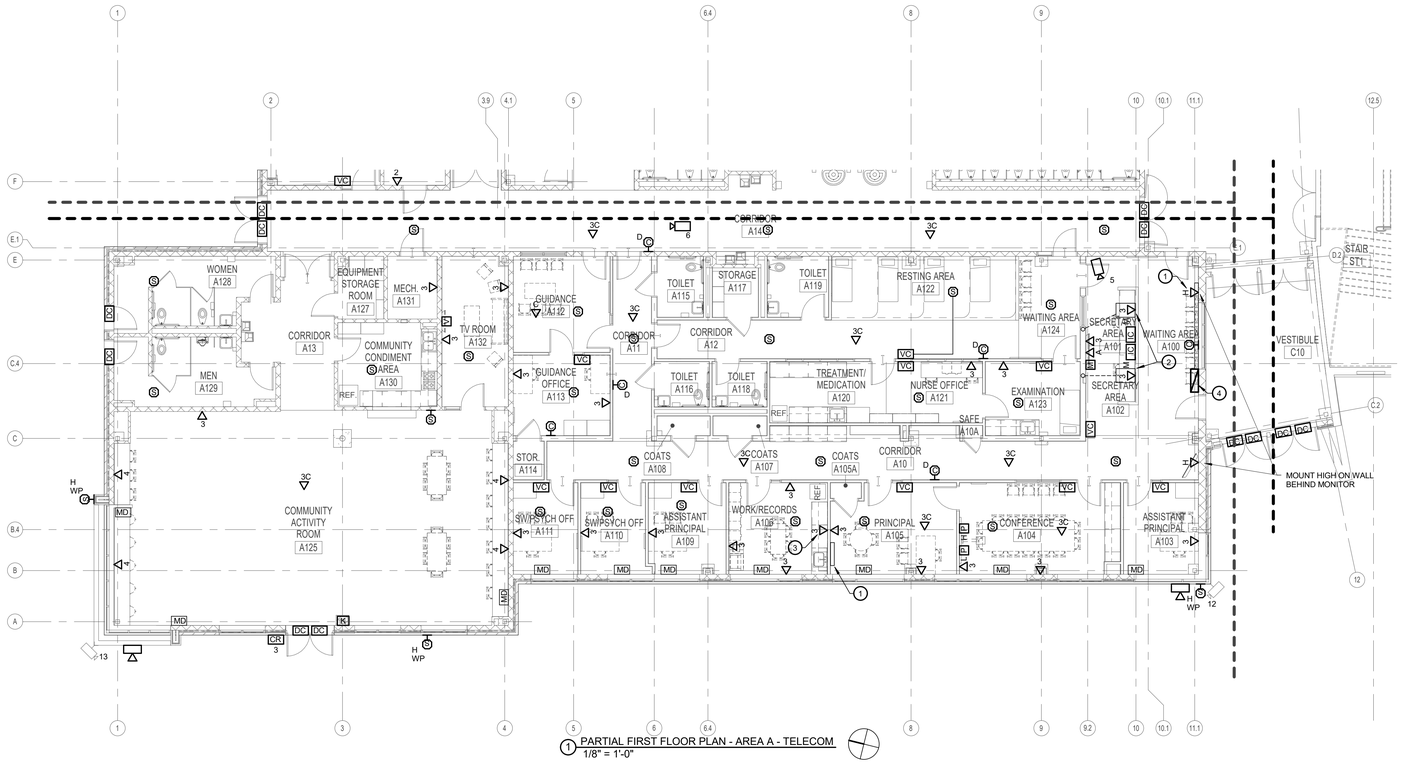

1 PARTIAL FIRST FLOOR PLAN - AREA A - TELECOM
1/8" = 1'-0"

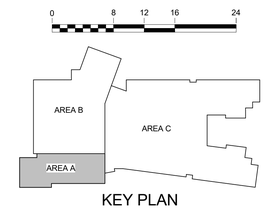

KEY PLAN

STATE OF MARYLAND
JAMES WALLIS WRIGHT
No. 22088
PROFESSIONAL ENGINEER

Professional Certification:
I hereby certify that these documents were prepared or approved by me, & I am a duly licensed professional engineer under the laws of the State of Maryland License # 22088, Expiration: 10-14-2016

Wright Engineering, LLC
Consulting Engineers
853 Ripple Stream Court
Joppa, MD 21085
P (410) 877-6297 F (866) 635-0374
www.wrightengineering.net

THIS DOCUMENT IS THE PROPERTY OF WRIGHT ENGINEERING, LLC. REPRODUCTION OR USE FOR ANY PURPOSE OTHER THAN THAT AUTHORIZED BY WRIGHT ENGINEERING, LLC IS PROHIBITED.

11720 Beltsville Drive
Suite 600
Calverton, MD 20705
Tel: 301.595.1000
www.grimmandparker.com
GRIMM AND PARKER

GP #21541

PARTIAL FIRST FLOOR PLAN - AREA A - TELECOM

LANSDOWNE ELEMENTARY SCHOOL
2301 ALMA ROAD, BALTIMORE, MD

DATE	DESCRIPTION

T-1.1A
09/29/16
BID SET

© GRIMM AND PARKER, P.C. 2014

© GRIMM AND PARKER, P.C. 2014

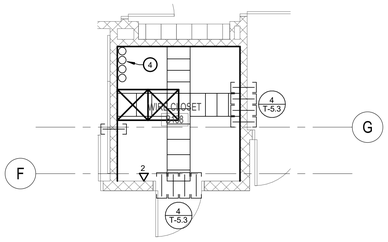

2 IDF WIRE CLOSET B138
1/4" = 1'-0"

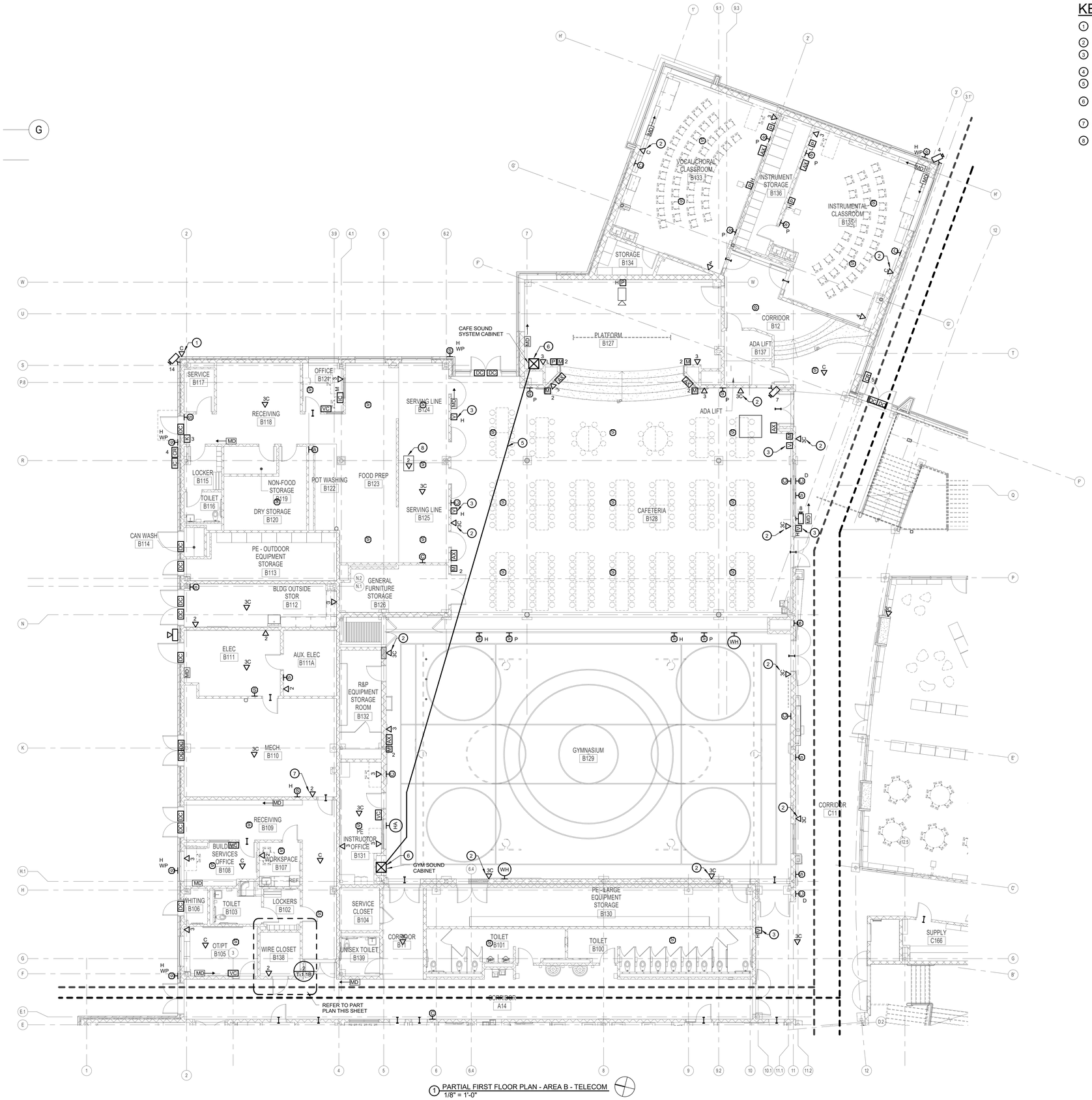

1 PARTIAL FIRST FLOOR PLAN - AREA B - TELECOM
1/8" = 1'-0"

KEYED NOTES:

1. PROVIDE WIFI OUTLET IN 12"x12" OUTDOOR WIFI ENCLOSURE. COORDINATE EXACT LOCATION IN FIELD.
2. MOUNT ON WALL 8' AFF.
3. MOUNT HIGH ON WALL. REFER TO ARCHITECTURAL DRAWINGS.
4. (4) 4" C TO MDF C105.
5. PROVIDE (3) CAT5 SHIELDED CABLES IN 1" C FROM CAFE SOUND CABINET TO GYM SOUND CABINET.
6. PROVIDE PA OVERRIDE OF LOCAL SOUND SYSTEM. PROVIDE OVERRIDE CABLING FROM LOCAL SOUND SYSTEM TO PA CABINET IN MDF ROOM C105.
7. CONNECT TO ATC PANEL. COORDINATE EXACT LOCATION.
8. PROVIDE UNDER CASHIERS STATION.

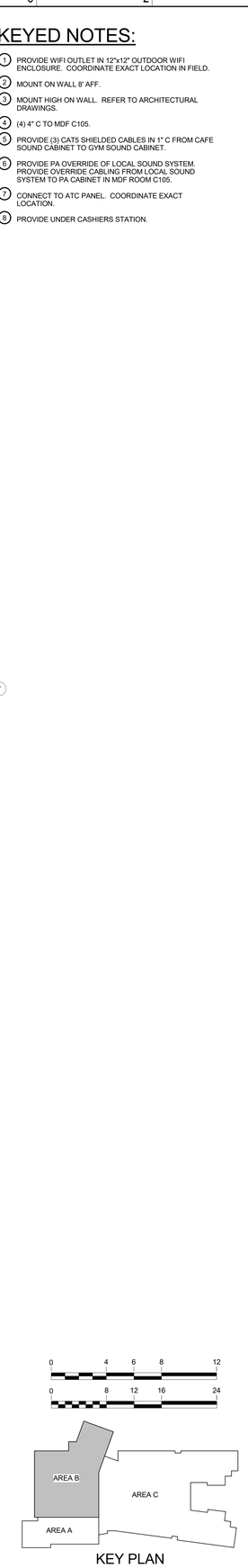

KEY PLAN

STATE OF MARYLAND
JAMES WALLIS WRIGHT
No. 22868
PROFESSIONAL ENGINEER

Professional Certification:
I hereby certify that these documents were prepared or approved by me, & I am a duly licensed professional engineer under the laws of the State of Maryland License No. 22868, Expiration: 10-14-2016

Wright Engineering, LLC
Consulting Engineers
853 Ripple Stream Court
Joppa, MD 21085
P (410) 877-6297 F (866) 635-0374
www.wrightengineering.net

THIS DOCUMENT IS THE PROPERTY OF WRIGHT ENGINEERING, LLC. THE REPRODUCTION, ALTERATION OR USE FOR ANY PURPOSE OTHER THAN THAT AUTHORIZED BY WRIGHT ENGINEERING, LLC IS PROHIBITED.

11720 Beltsville Drive
Suite 600
Calverton, MD 20705
Tel: 301.595.1000
www.grimmandparker.com
GRIMM AND PARKER

GP #21541

PARTIAL FIRST FLOOR PLAN - AREA B - TELECOM

LANSDOWNE ELEMENTARY SCHOOL
2301 ALMA ROAD, BALTIMORE, MD

DATE	DESCRIPTION

T-1.1B
09/29/16
BID SET

© GRIMM AND PARKER, P.C. 2014

© GRIMM AND PARKER, P.C. 2014

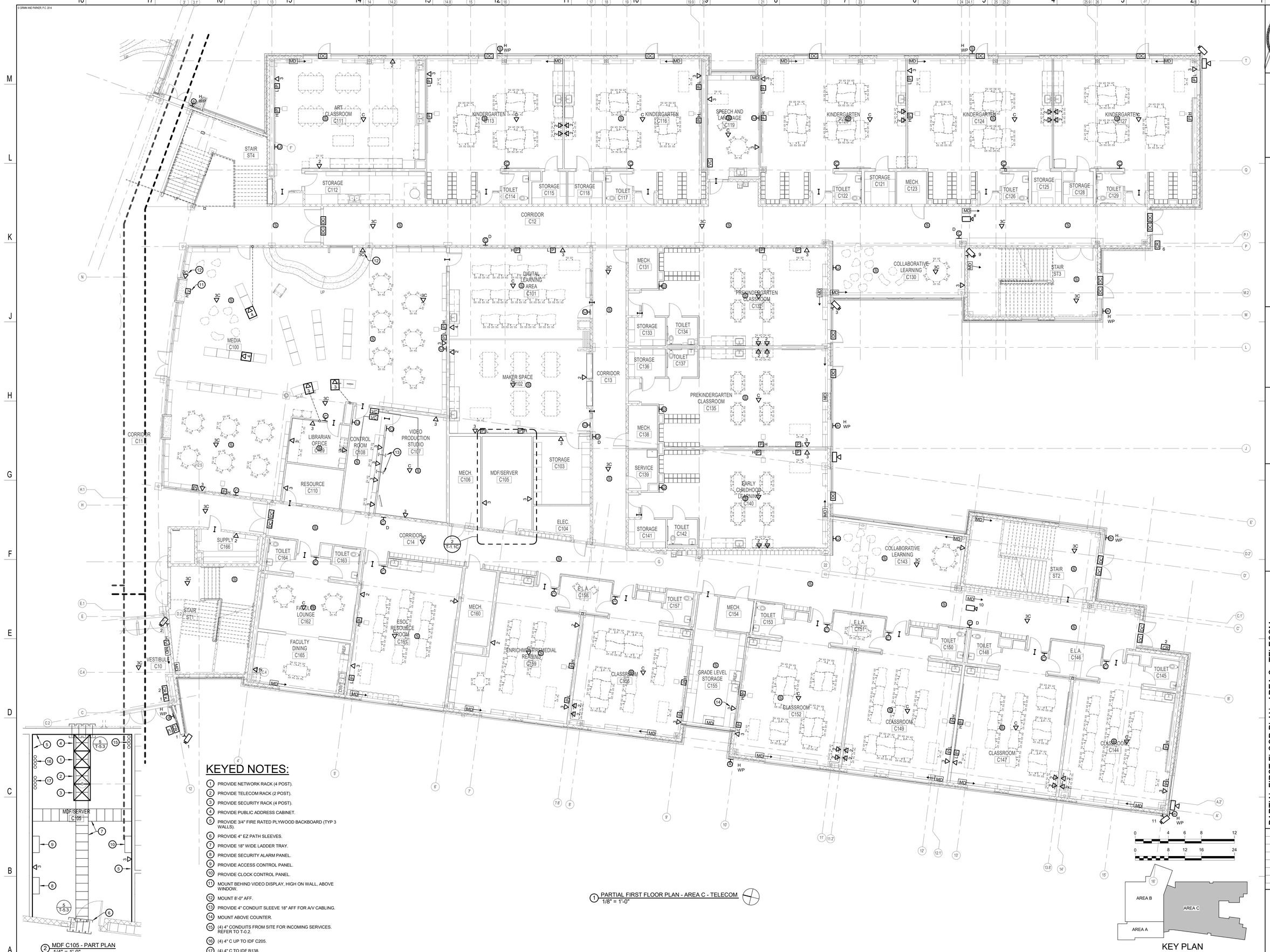

KEYED NOTES:

1. PROVIDE NETWORK RACK (4 POST).
2. PROVIDE TELECOM RACK (2 POST).
3. PROVIDE SECURITY RACK (4 POST).
4. PROVIDE PUBLIC ADDRESS CABINET.
5. PROVIDE 3/4" FIRE RATED PLYWOOD BACKBOARD (TYP 3 WALLS).
6. PROVIDE 4" EZ PATH SLEEVES.
7. PROVIDE 18" WIDE LADDER TRAY.
8. PROVIDE SECURITY ALARM PANEL.
9. PROVIDE ACCESS CONTROL PANEL.
10. PROVIDE CLOCK CONTROL PANEL.
11. MOUNT BEHIND VIDEO DISPLAY, HIGH ON WALL, ABOVE WINDOW.
12. MOUNT 8'-0" AFF.
13. PROVIDE 4" CONDUIT SLEEVE 18" AFF FOR A/V CABLING.
14. MOUNT ABOVE COUNTER.
15. (4) 4" CONDUITS FROM SITE FOR INCOMING SERVICES. REFER TO T-0.2.
16. (4) 4" C UP TO IDF C205.
17. (4) 4" C TO IDF B138.

1 PARTIAL FIRST FLOOR PLAN - AREA C - TELECOM
1/8" = 1'-0"

2 MDF C105 - PART PLAN
1/4" = 1'-0"

STATE OF MARYLAND JAMES WALLIS WRIGHT No. 22608 PROFESSIONAL ENGINEER

Professional Certification:
I hereby certify that these documents were prepared or approved by me, & I am a duly licensed professional engineer under the laws of the State of Maryland License No. 22608, Expiration: 10-14-2016

Wright Engineering, LLC
Consulting Engineers
853 Ripple Stream Court
Joppa, MD 21085
P (410) 877-6297 F (866) 635-0374
www.wrightengineering.net

THIS DOCUMENT IS THE PROPERTY OF WRIGHT ENGINEERING, LLC. THE REPRODUCTION, ALTERATION OR USE FOR ANY PURPOSE OTHER THAN THAT AUTHORIZED BY WRIGHT ENGINEERING, LLC IS FORBIDDEN.

11720 Beltsville Drive
Suite 600
Calverton, MD 20705
Tel: 301.595.1000
www.grimmandparker.com
GRIMM AND PARKER

GP #21541

PARTIAL FIRST FLOOR PLAN - AREA C - TELECOM

LANSDOWNE ELEMENTARY SCHOOL
2301 ALMA ROAD, BALTIMORE, MD

DATE	DESCRIPTION

T-1.1C
09/29/16
BID SET

© GRIMM AND PARKER, P.C. 2014

© GRIMM AND PARKER, P.C. 2014

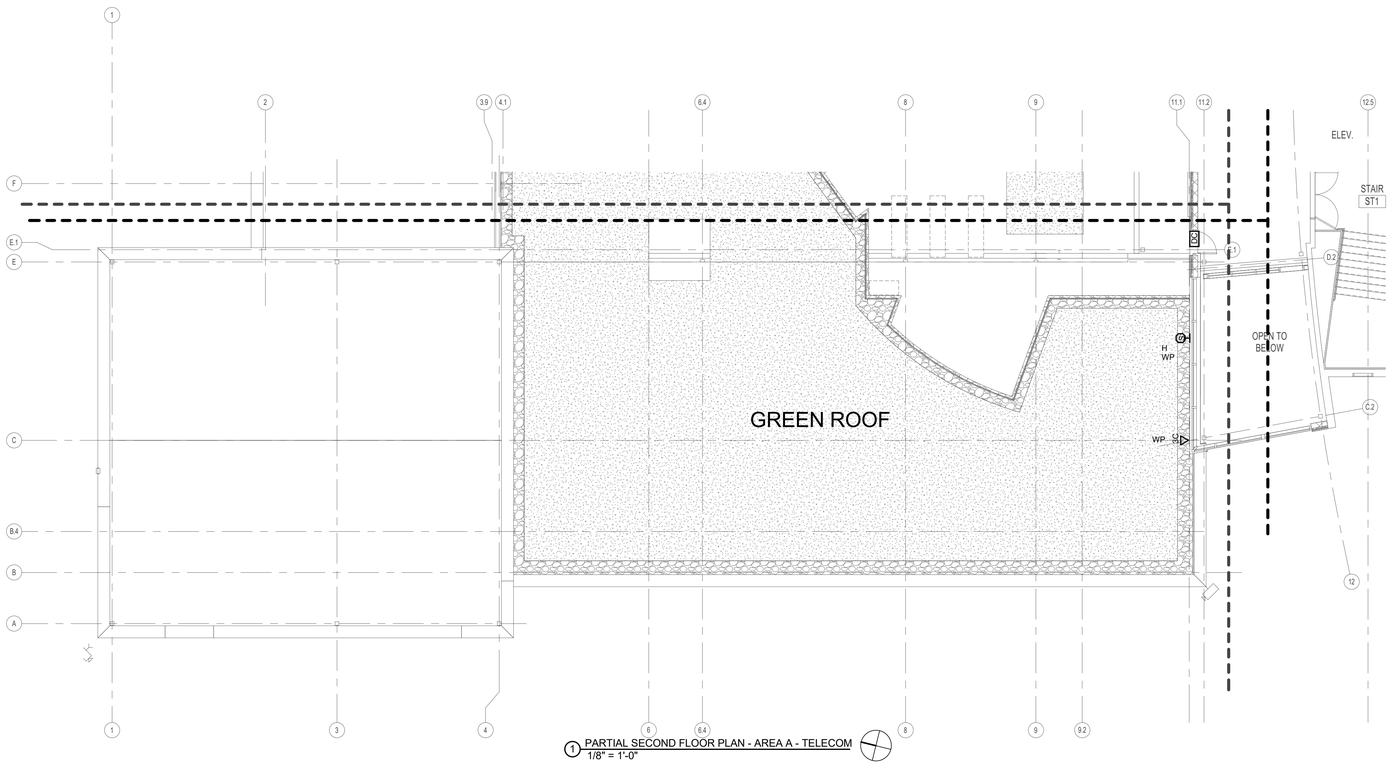

1 PARTIAL SECOND FLOOR PLAN - AREA A - TELECOM
1/8" = 1'-0"

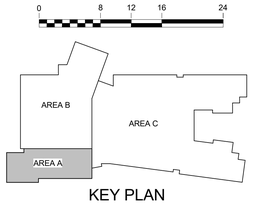

KEY PLAN

STATE OF MARYLAND
JAMES WALLIS WRIGHT
No. 22868
PROFESSIONAL ENGINEER

Professional Certification:
I hereby certify that these documents were prepared or approved by me, & I am a duly licensed professional engineer under the laws of the State of Maryland License #22868, Expiration: 10-14-2016

Wright Engineering, LLC
Consulting Engineers
853 Ripple Stream Court
Joppa, MD 21085
P (410) 877-6297 F (866) 635-0374
www.wrightengineering.net

PROFESSIONAL ENGINEERING SERVICES ONLY
THIS DOCUMENT IS NOT INTENDED FOR ARCHITECTURAL SERVICES
THIS DOCUMENT IS NOT INTENDED FOR CONSTRUCTION PURPOSES UNLESS SIGNED AND SEALED

11720 Beltsville Drive
Suite 600
Calverton, MD 20705
Tel: 301.595.1000

www.grimmandparker.com

GRIMM AND PARKER

GP #21541

PARTIAL SECOND FLOOR PLAN - AREA A - TELECOM

LANSDOWNE ELEMENTARY SCHOOL
2301 ALMA ROAD, BALTIMORE, MD

DATE	DESCRIPTION

T-1.2A

09/29/16
BID SET

© GRIMM AND PARKER, P.C. 2014

© GRIMM AND PARKER, P.C. 2014

KEYED NOTES:

1. CONNECT TO ATC PANEL. COORDINATE EXACT LOCATION.
2. MOUNT BEHIND VIDEO DISPLAY.

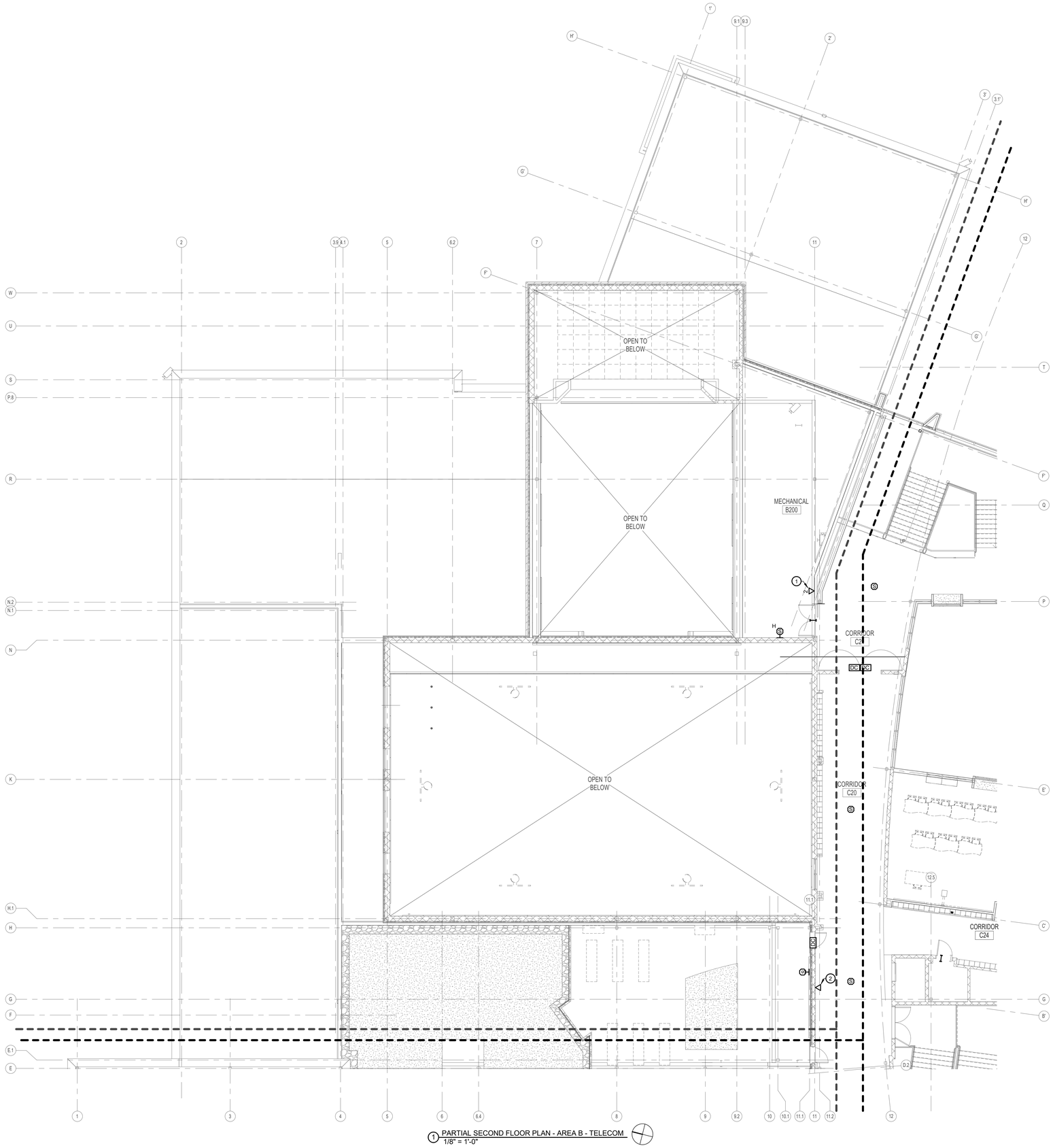

1 PARTIAL SECOND FLOOR PLAN - AREA B - TELECOM
1/8" = 1'-0"

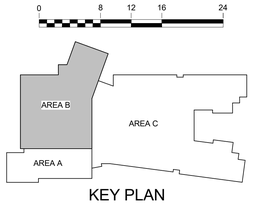

KEY PLAN

STATE OF MARYLAND
JAMES WALLIS WRIGHT
No. 22868
PROFESSIONAL ENGINEER

Professional Certification:
I hereby certify that these documents were prepared or approved by me, & I am a duly licensed professional engineer under the laws of the State of Maryland License # 22868, Expiration: 10-14-2016

Wright Engineering, LLC
Consulting Engineers
853 Ripple Stream Court
Joppa, MD 21085
P (410) 877-6297 F (866) 635-0374
www.wrightengineering.net

PROPRIETARY INFORMATION: THIS DOCUMENT IS THE PROPERTY OF WRIGHT ENGINEERING, LLC. THE USE OF THIS DOCUMENT IS LIMITED TO THE PROJECT SPECIFIED HEREIN. REPRODUCTION IN WHOLE OR IN PART IS PROHIBITED WITHOUT THE WRITTEN CONSENT OF WRIGHT ENGINEERING, LLC.

11720 Baltsville Drive
Suite 600
Calverton, MD 20705
Tel: 301.595.1000

www.grimmandparker.com

GRIMM AND PARKER

GP #21541

PARTIAL SECOND FLOOR PLAN - AREA B - TELECOM

LANSDOWNE ELEMENTARY SCHOOL
2301 ALMA ROAD, BALTIMORE, MD

DATE	DESCRIPTION

T-1.2B

09/29/16
BID SET

© GRIMM AND PARKER, P.C. 2014

© GRIMM AND PARKER, P.C. 2014

KEYED NOTES:

1. PROVIDE TELECOM RACK (2 POST).
2. PROVIDE 18" WIDE LADDER TRAY.
3. PROVIDE 4" EZ PATH SLEEVES.
4. PROVIDE 3/4" FIRE RATED PLYWOOD (3 WALLS).
5. MOUNT ABOVE COUNTER.
6. (4) 4" C DOWN TO MDF C105.
7. (1) 4" C UP TO ROOF.
8. PROVIDE FM ANTENNA ON ROOF. REFER TO DETAIL SHEET T-5.1.

1 PARTIAL SECOND FLOOR PLAN - AREA C - TELECOM
1/8" = 1'-0"

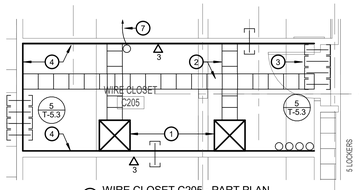

2 WIRE CLOSET C205 - PART PLAN
1/4" = 1'-0"

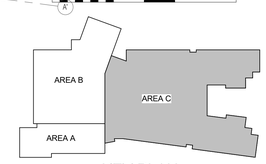

KEY PLAN

STATE OF MARYLAND
JAMES WALLIS WRIGHT
No. 22086
PROFESSIONAL ENGINEER

Professional Certification:
I hereby certify that these documents were prepared or approved by me, & I am a duly licensed professional engineer under the laws of the State of Maryland License No. 22086, Expiration: 10-14-2016

Wright Engineering, LLC
Consulting Engineers
853 Ripple Stream Court
Joppa, MD 21085
P (410) 877-6297 F (866) 635-0374
www.wrightengineering.net

THIS DOCUMENT IS THE PROPERTY OF WRIGHT ENGINEERING, LLC. THE REPRODUCTION, ALTERATION OR USE FOR ANY PURPOSE OTHER THAN THAT AUTHORIZED BY WRIGHT ENGINEERING, LLC IS FORBIDDEN.

11720 Beltsville Drive
Suite 600
Calverton, MD 20705
Tel: 301.595.1000
www.grimmandparker.com
GRIMM AND PARKER

GP #21541

PARTIAL SECOND FLOOR PLAN - AREA C - TELECOM

LANSDOWNE ELEMENTARY SCHOOL
2301 ALMA ROAD, BALTIMORE, MD

DATE	DESCRIPTION

T-1.2C

09/29/16
BID SET

© GRIMM AND PARKER, P.C. 2014

© GRIMM AND PARKER, P.C. 2014

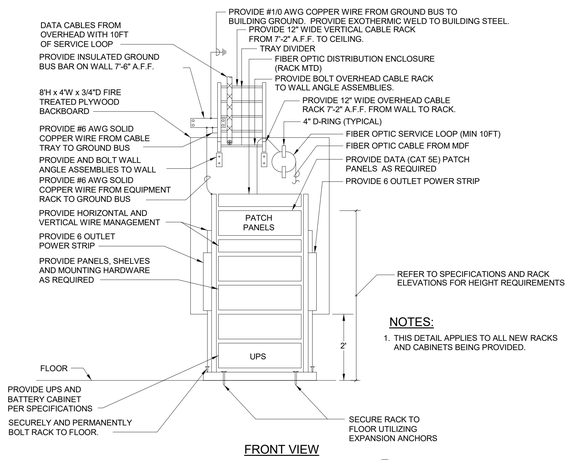

FRONT VIEW

NOTES:

1. THIS DETAIL APPLIES TO ALL NEW RACKS AND CABINETS BEING PROVIDED.

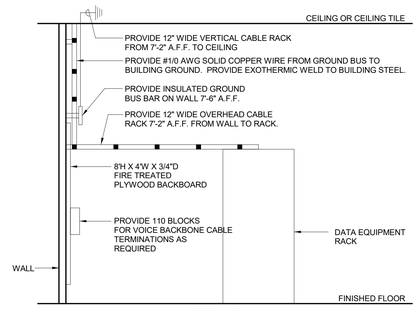

SIDE VIEW

1 EQUIPMENT RACK DETAIL

NO SCALE

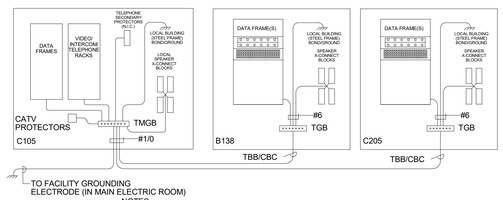

NOTES:
TGB = TELECOMMUNICATIONS GROUNDING BUSBAR
TMGB = TELECOMMUNICATIONS MAIN GROUNDING BUSBAR
TBB = TELECOMMUNICATIONS BONDING BACKBONE
ALL BONDING CABLE IS #6AWG STRANDED COPPER
W/GREEN JACKET WITH TELECOM ROOM
INNERCLOSET BONDING CABLE STRAPPED TO INTERCOM
BACKBONE CABLE AS A COUPLED BONDING CONDUCTOR (CBC) SHALL BE #1/0 AWG
PRIMARY TELEPHONE UTILITY (C.O.) PROTECTION BY VERIZON
(LOCATED IN MAIN ELECTRICAL ROOM) (NOT ILLUSTRATED)
LOUDSPEAKER CIRCUIT SHIELDS ARE GROUNDED AT TGB'S OR
TMGB RESPECTIVELY CAFETERIA, GYMNASIUM, AUDITORIUM &
MISC. SOUND SYSTEM CABINETS ARE LOCALLY GROUNDED V/A
AC POWER SYSTEM (NOT ILLUSTRATED)

2 TELECOMMUNICATIONS GROUNDING AND BONDING SYSTEM DIAGRAM

NO SCALE

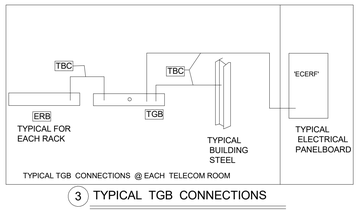

3 TYPICAL TGB CONNECTIONS

TELECOMMUNICATIONS GROUNDING LEGEND

ALL CONDUCTORS SHALL BE GREEN INSULATED SOLID COPPER CONDUCTORS.

TBC	TELECOMMUNICATIONS BONDING CONDUCTOR #6 AWG UNLESS OTHERWISE NOTED.
MBC	TELECOMMUNICATIONS MAIN BONDING CONDUCTOR #2 / 0 AWG.
TBB	TELECOMMUNICATIONS BONDING BACKBONE # 2 / 0 AWC
TGB	TELECOMMUNICATIONS GROUND BAR MOUNTED ON BACKBOARD, SEE DETAIL.
TMGB	TELECOMMUNICATIONS MAIN GROUND BAR MOUNTED ON BACKBOARD , SEE DETAIL.
ERB	EQUIPMENT RACK BUSBER. MOUNT ON THE REAR SIDE OF EACH RACK, AT THE TOP, SEE DETAIL

TELECOMMUNICATIONS GROUNDING SYSTEM DIAGRAM

SCALE : NONE

NOTES:
1. RUN ALL GROUND CONDUCTORS IN THIS SYSTEM IN TELECOM PRIMARY AND SECONDARY PATHWAYS TO EXTEND FEASIBLE.

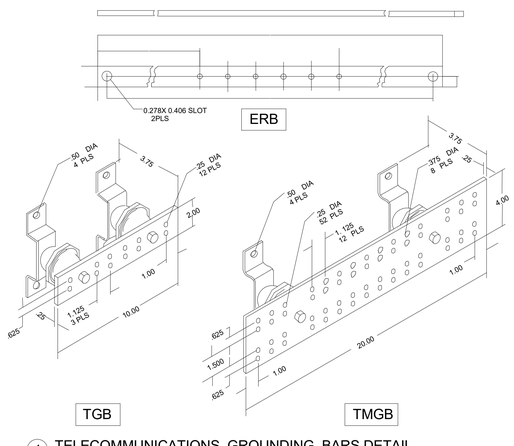

4 TELECOMMUNICATIONS GROUNDING BARS DETAIL

SCALE: NONE

NOTES:
1. TYPICAL RUSBARS,INSULATORS AND BACKBOARD MOUNT BRACKETS SHOWN HERE REFLECT TIA STANDARDS-COMPLIANT DIMENSIONS.
2. MOUNT BACKBOARD-MOUNTED BUSBARS @ 6'-6" A-F UNLESS DIRECTED OTHERWISE BY OWNER

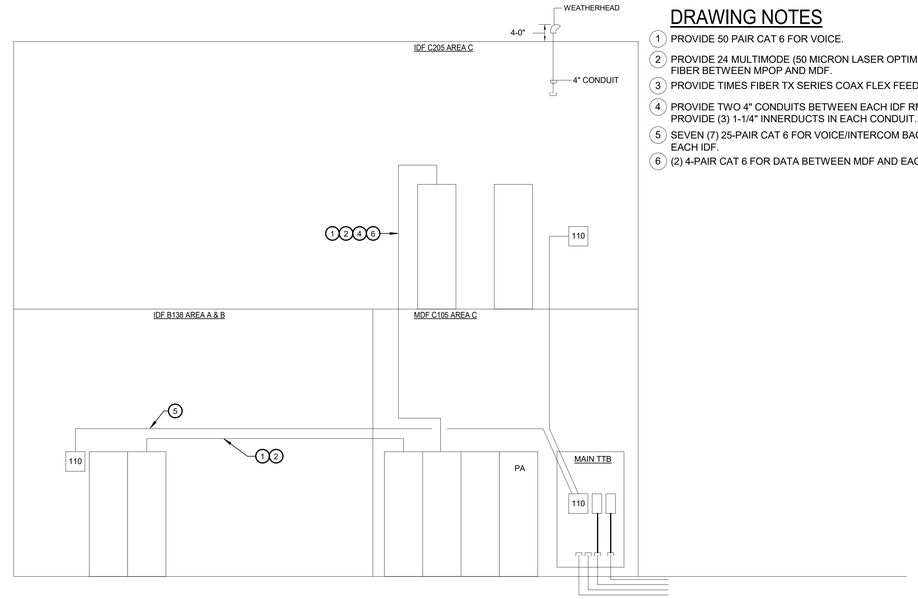

5 TELECOM RISER

NO SCALE

DRAWING NOTES

1. PROVIDE 50 PAIR CAT 6 FOR VOICE.
2. PROVIDE 24 MULTIMODE (50 MICRON LASER OPTIMIZED OM3) AND 12 STRAND SINGLEMODE FIBER BETWEEN MPOP AND MDF.
3. PROVIDE TIMES FIBER TX SERIES COAX FLEX FEEDER CABLE.
4. PROVIDE TWO 4" CONDUITS BETWEEN EACH IDF RM AND MDF RM C105. PROVIDE (3) 1-1/4" INNERDUCTS IN EACH CONDUIT.
5. SEVEN (7) 25-PAIR CAT 6 FOR VOICE/INTERCOM BACKBONE BETWEEN MDF AND EACH IDF.
6. (2) 4-PAIR CAT 6 FOR DATA BETWEEN MDF AND EACH IDF.

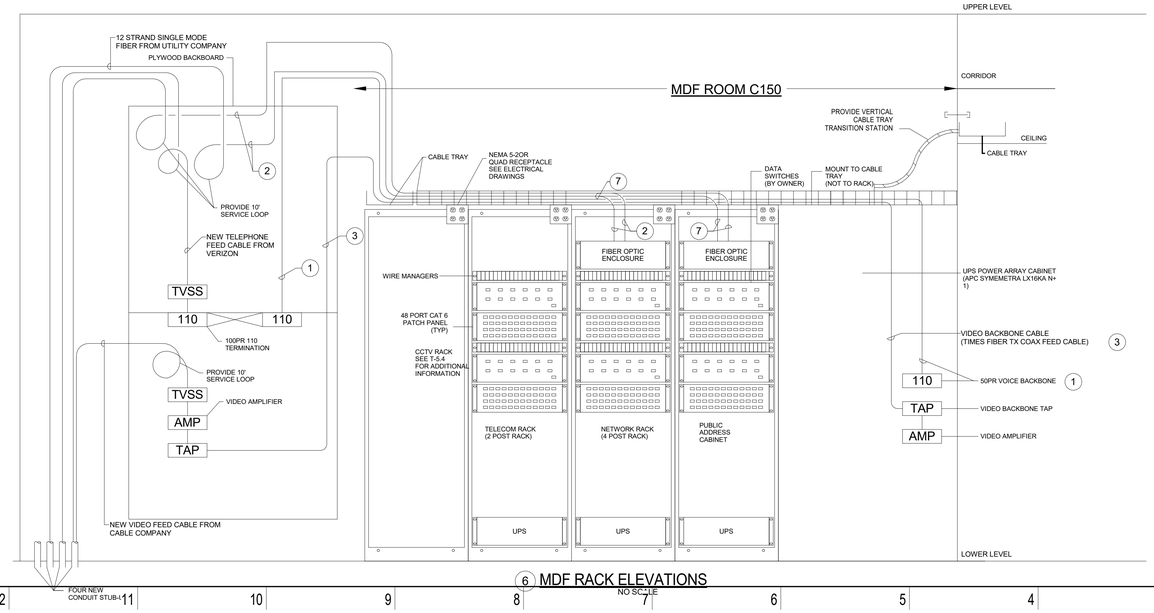

6 MDF RACK ELEVATIONS

NO SCALE

Professional Certification:
I hereby certify that these documents were prepared or approved by me, & I am a duly licensed professional engineer under the laws of the State of Maryland License # 22088, Expiration: 10-14-2016

Wright Engineering, LLC
Consulting Engineers
853 Ripple Stream Court
Joppa, MD 21085
P (410) 877-6297 F (866) 635-0374
www.wrightengineering.net

11720 Baltsville Drive
Suite 600
Calverton, MD 20705
Tel: 301.595.1000
www.grimmandparker.com

GRIMM AND PARKER

GP #21541

RISERS - TELECOM

LANSDOWNE ELEMENTARY SCHOOL
2301 ALMA ROAD, BALTIMORE, MD

DATE	DESCRIPTION

T-4.1

09/29/16
BID SET

© GRIMM AND PARKER, P.C. 2014

© GRIMM AND PARKER, P.C. 2014

1 CAFETERIA/MULTIPURPOSE AUXILIARY SOUND SYSTEMS DETAIL

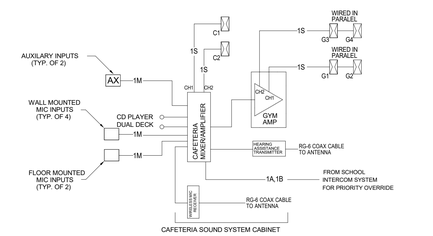

2 LOCAL SOUND OVERRIDE DETAIL

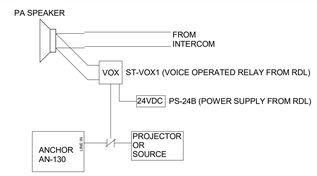

3 TYPICAL SYSTEM CLOCK WIRING

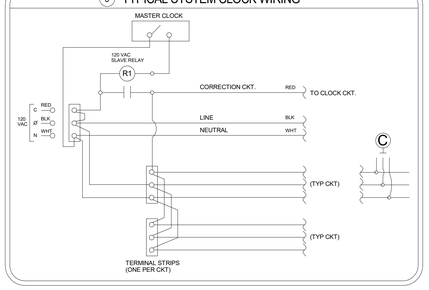

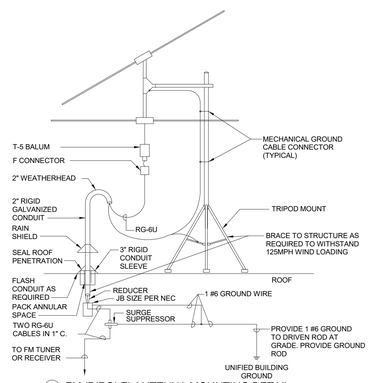

4 FM (DIPOLE) ANTENNA MOUNTING DETAIL

CONTRACTOR SHALL SUBMIT A ROOF PENETRATION DETAIL TO BCPS FOR APPROVAL PRIOR TO INSTALLATION

5 TYPICAL WIRING DETAIL

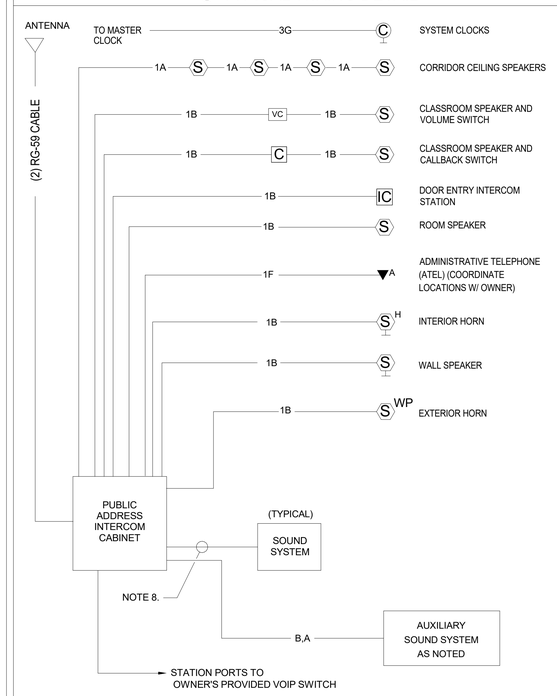

TYPICAL WIRING NOTES

1. DO NOT RUN 120VAC IN ANY CONDUIT CONTAINING AUDIO CIRCUITS,
2. TAPE ALL UNUSED SPEAKER LEADS, CONNECT SHIELDS ONLY WHERE SHOWN
3. DO NOT RUN MICROPHONE AND SPEAKER CABLES IN THE SAME CONDUIT.
4. ALL WIRING/CABLE TO BE IDENTIFIED, MARKED, & LEDGERED BY CONTRACTOR.
5. TYPICAL WIRING FOR EACH CLASSROOM AND CORRIDORS
6. ALL ROOM SPEAKERS REQUIRE INDIVIDUAL HOME RUNS UNLESS OTHERWISE NOTED.
7. ALL ADMIN TELPHONES REQUIRE HOME RUN FROM ASSOCIATED SUB-CABINET TO MAIN CABINET.
8. SOUND SYSTEM WIRING HOMERUN TO SOUND SYSTEM MAIN DISTRIBUTION EQUIPMENT LOCATION SS-MDEL. 20/3 (1 PAIR SHIELDED) PLENUM RATED AUDIO CABLE (TYPICAL), ONE CABLE PER ADMIN TELEPHONE & SPEAKER ZONE SHOWN ON THE FLOOR PLANS PLUS FOUR (4) SPARE CABLES TERMINATED AT BOTH EQUIP. LOCATIONS.

REF.	CABLE	DESCRIPTION	CONDUCTORS	SHIELDING
A	*25293B	1 TWISTED, SHIELDED PAIR.	#18 AWG STRANDED	FOIL W/BARE DRAIN WIRE.
B	*25359B	1 TWISTED SHIELDED PAIR + 1 TWISTED PAIR.	#20 AWG STRANDED	FOIL W/BARE DRAIN WIRE.
C	*25510	2 PAIR INDIVIDUALLY SHIELDED.	#22 AWG STRANDED TINNED.	COMMON DRAIN WIRE
D	*25225	2 TWISTED CONDUCTORS	#16 AWG	NONE
F	*D253652	3 TWISTED SHIELDED PAIR	#22 AWG	OVERWALL
G		CLOCK CIRCUIT	#14 AWG	NONE
I	*25302	(2) 3 CONDUCTORS	#20 AWG	OVERALL
M	*25292B	1 TWISTED, SHIELDED PAIR.	#20 AWG STRANDED	FOIL W/BARE DRAIN WIRE.
S	*25226B	1 TWISTED PAIR	#14 AWG STRANDED	NONE
T	*25294B	1 TWISTED, SHIELDED PAIR.	#16 AWG	FOIL W/BARE DRAIN WIRE.

NOTES:

1. USE ONLY THE CABLE LISTED OR EQUAL, APPROVED BY EQUAL
2. * - WEST PENN CABLE
3. DO NOT RUN MICROPHONE AND SPEAKER CABLES IN THE SAME CONDUIT.

6 TYPICAL PUBLIC ADDRESS RACK DETAIL

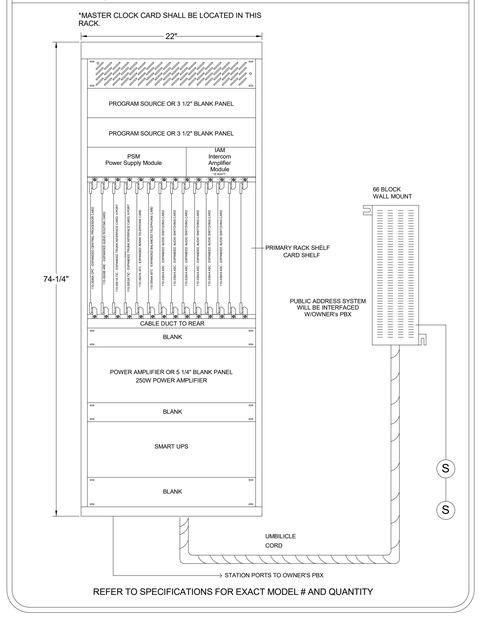

REFER TO SPECIFICATIONS FOR EXACT MODEL # AND QUANTITY

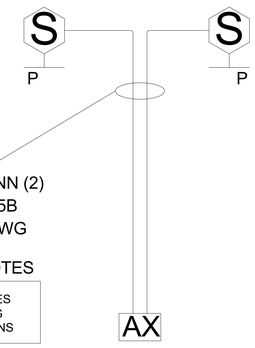

DRAWING NOTES

RECEPTACLE USES STEREO SPRING CLIP TERMINATIONS

7 CLASSROOM HI-PERFORMANCE LOUDSPEAKERS DETAIL

NO SCALE

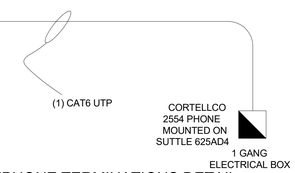

DRAWING NOTES

CONNECT WHT/BLU PAIR TO TIP RING ON SUTTLE 630AD4
TAPE OTHER PAIRS BACK FOR FUTURE USE

8 CLASSROOM DESK TELEPHONE TERMINATIONS DETAIL

NO SCALE

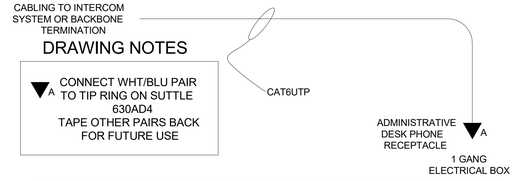

DRAWING NOTES

A CONNECT WHT/BLU PAIR TO TIP RING ON SUTTLE 630AD4
TAPE OTHER PAIRS BACK FOR FUTURE USE

9 ADMINISTRATIVE TELEPHONE TERMINATIONS DETAIL

NO SCALE

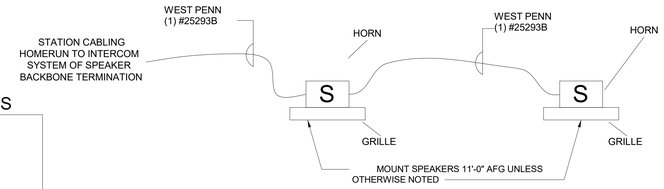

DRAWING NOTES

H S WP HORN TYPE LOUDSPEAKER (TAP XFMR 2W@25V) SURFACE MOUNT
ALL SPEAKER CABLING WP#25293B PLENUM 2C/18AWG SHIELDED

ALL SHIELDS ARE CONTINUOUS AND SPLICE THROUGH EACH SPEAKER ENCLOSURE AND ARE ISOLATED FROM GROUND

10 OUTDOOR HORN TERMINATIONS DETAIL

NO SCALE

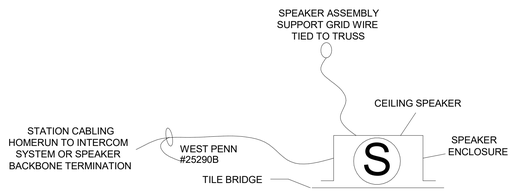

DRAWING NOTES

CEILING SPEAKER (TAP XFMR 1/2W@25V YELLOW AND BLACK)

ALL SPEAKER CABLING WP#25290B PLENUM 2C/22AWG SHIELDED

11 CLASSROOM SPEAKER TERMINATION DETAIL

NO SCALE

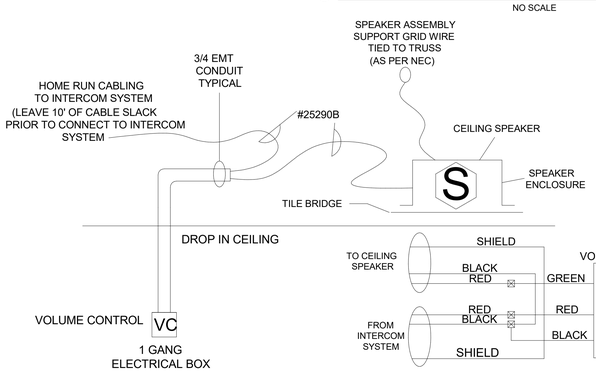

DRAWING NOTES

S CEILING SPEAKER (TAP XFMR 1/2W@25V)

VC VOLUME CONTROL

ALL SPEAKER/ VOLUME CONTROL CABLING WP#25290B PLENUM 2C/22AWG SHIELDED

12 SPEAKER & VOLUME CONTROL TERMINATIONS DETAIL

NO SCALE

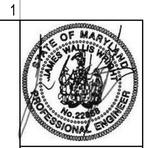

Professional Certification: I hereby certify that these documents were prepared or approved by me, & I am a duly licensed professional engineer under the laws of the State of Maryland License No. 22608, Expiration: 10-14-2016

Wright Engineering, LLC
Consulting Engineers
853 Ripple Stream Court
Joppa, MD 21085
P (410) 877-6297 F (866) 635-0374
www.wrightengineering.net

THIS DOCUMENT IS THE PROPERTY OF WRIGHT ENGINEERING, LLC. REPRODUCTION OR USE FOR ANY PURPOSE OTHER THAN THAT AUTHORIZED BY WRIGHT ENGINEERING, LLC IS PROHIBITED.

11720 Beltsville Drive
Suite 600
Calverton, MD 20705
Tel: 301.595.1000
www.grimmandparker.com

GRIMM AND PARKER

GP #21541

DETAILS - TELECOM

LANSDOWNE ELEMENTARY SCHOOL
2301 ALMA ROAD, BALTIMORE, MD

DATE	DESCRIPTION

T-5.1

09/29/16
BID SET

© GRIMM AND PARKER, P.C. 2014

© GRIMM AND PARKER, P.C. 2014

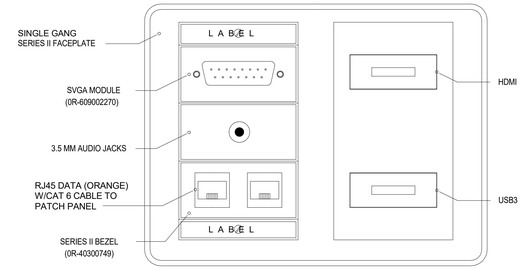

1 TYPICAL PROJECTOR HIGH OUTLET DETAIL P H

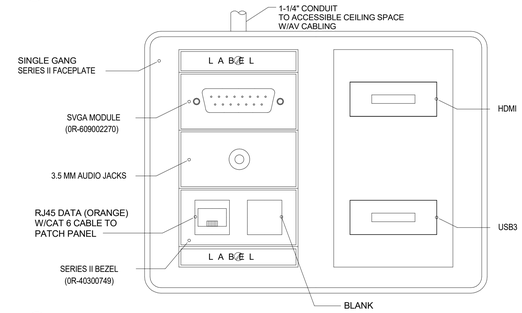

2 TYPICAL PROJECTOR LOW OUTLET DETAIL P L

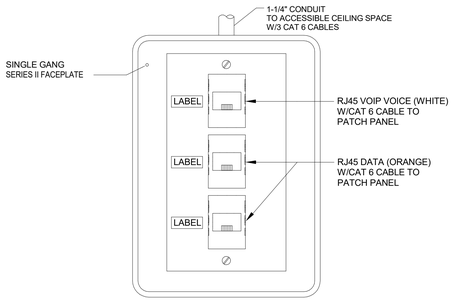

3 TYPICAL TEACHER/CLERICAL OUTLET ▽3

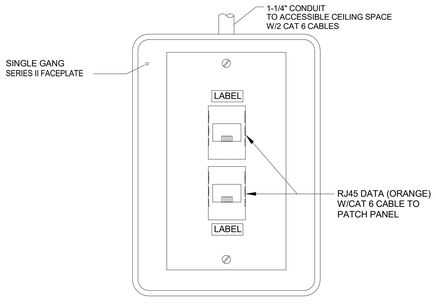

4 TYPICAL STUDENT OUTLET ▽2

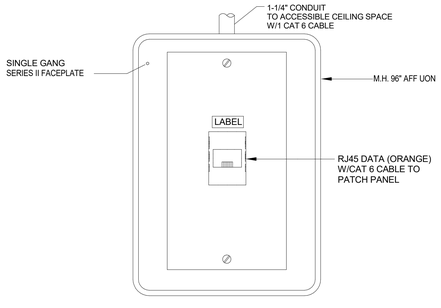

5 TYPICAL VIDEO OUTLET DETAIL V

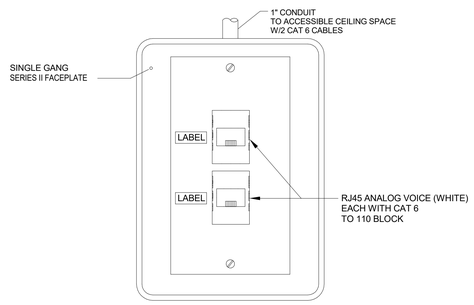

6 TYPICAL TELEPHONE OUTLET ▼2

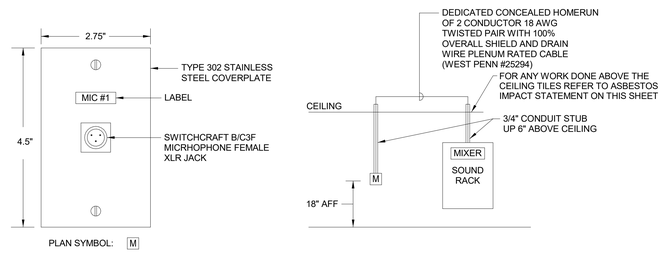

7 MICROPHONE OUTLET DETAIL

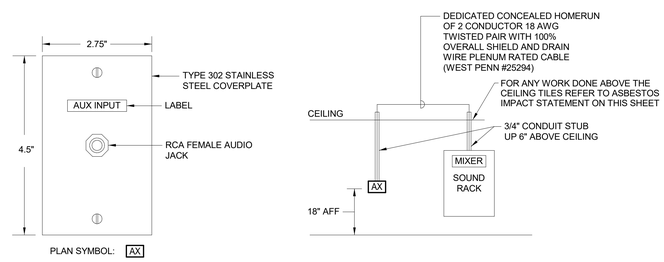

8 AUXILIARY JACK DETAIL

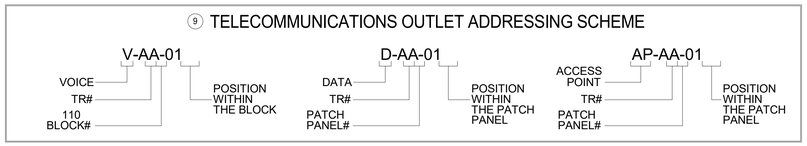

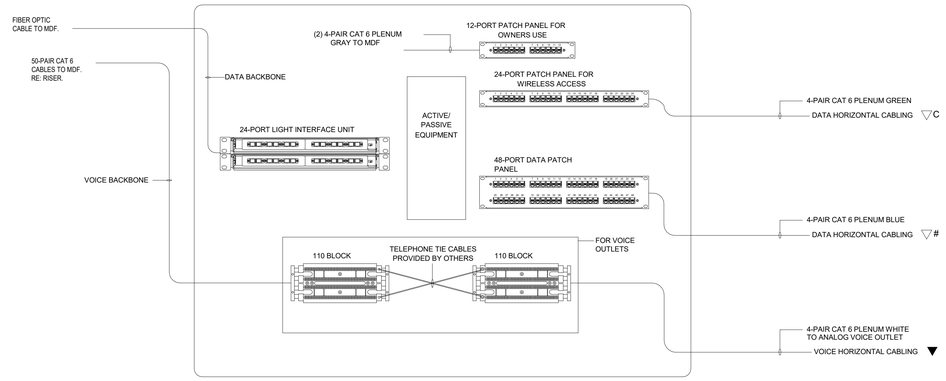

10 TYPICAL CROSS-CONNECTION IN MDF/IDF
NOT TO SCALE

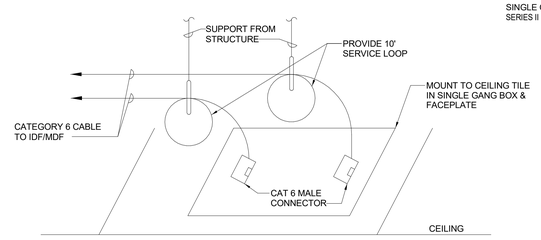

11 WIRELESS ACCESS CONNECTION DETAIL
NO SCALE

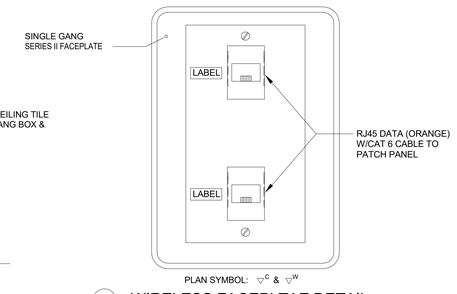

12 WIRELESS FACEPLTAE DETAIL

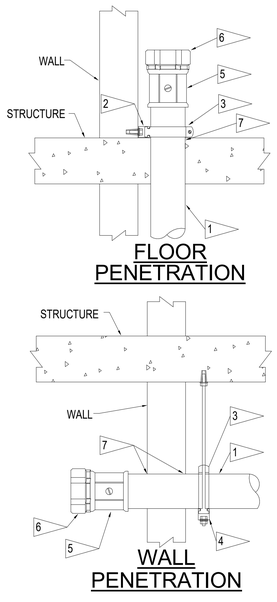

KEYNOTES:

1. 4" EMT CONDUIT, USE COMPRESSION COUPLINGS AND FITTINGS UNLESS OTHERWISE NOTED.
2. 1-1/2"x1-1/2" 12 GA. KINDORF CHANNEL - ANCHOR SECURELY TO WALL.
3. 4" EMT STRAPS (KINDORF #C-105-4).
4. KINDORF CHANNEL AND STRAP SUPPORT - ANCHOR SECURELY TO DECK ABOVE.
5. 4" DIE CAST SET SCREW CONNECTOR (RACO #2646). FOR ALL CONDUIT SMALLER THAN 4", USE COMPRESSION CONNECTOR.
6. 4" PLASTIC INSULATING BUSHING (RACO #1416). INSTALL INSULATING, BONDING AND GROUNDING BUSHING AT CLOSET END OF CONDUIT.
7. FIRESTOP AS REQUIRED BY FIRE CODE.

GENERAL NOTES:

1. PENETRATE TELECOMMUNICATIONS ROOM 4" TO 8" MAXIMUM.
2. SIMILAR FOR ALL SIZE EMT CONDUITS.

13 RISER CONDUIT END FITTINGS DETAIL
NO SCALE

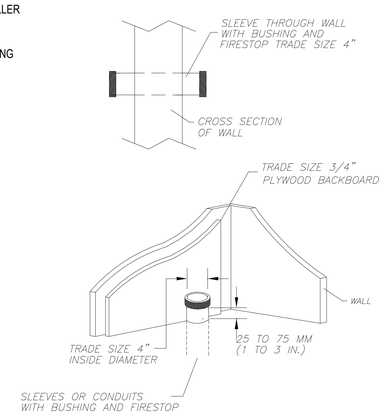

14 SLEEVE/CONDUIT DETAILS
NO SCALE

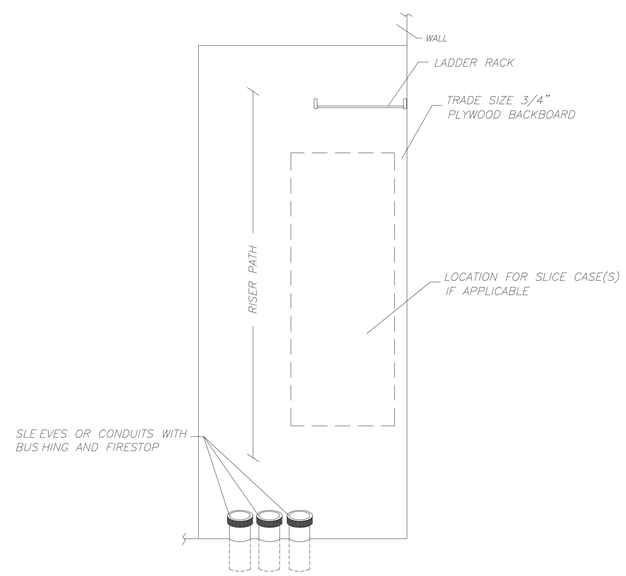

15 RISE BACKBOARD ELEVATION
NO SCALE

Professional Certification:
I hereby certify that these documents were prepared or approved by me, & I am a duly licensed professional engineer under the laws of the State of Maryland License No. 22088, Expiration: 10-14-2016

Wright Engineering, LLC
Consulting Engineers
853 Ripple Stream Court
Joppa, MD 21085
P (410) 877-6297 F (866) 635-0374
www.wrightengineering.net

11720 Beltsville Drive
Suite 600
Calverton, MD 20705
Tel: 301.595.1000
www.grimmandparker.com

GRIMM AND PARKER

GP #21541

DETAILS - TELECOM

LANSDOWNE ELEMENTARY SCHOOL
2301 ALMA ROAD, BALTIMORE, MD

DATE	DESCRIPTION

T-5.2

09/29/16
BID SET

© GRIMM AND PARKER, P.C. 2014

© GRIMM AND PARKER, P.C. 2014

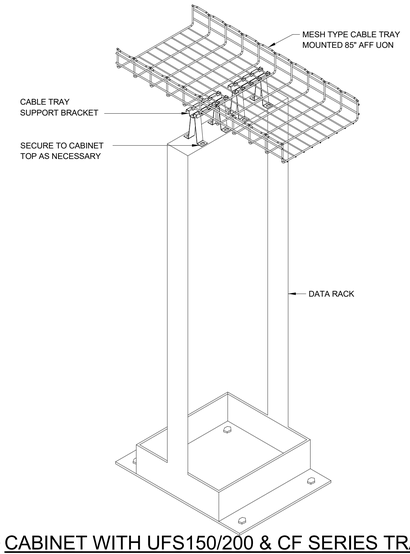

1 CABINET WITH UFS150/200 & CF SERIES TRAY
NOT TO SCALE

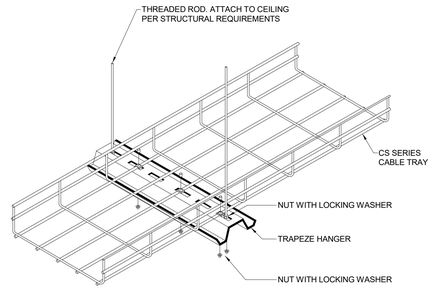

NOTE: PROVIDE TRAPEZE HANGER MINIMUM EVERY 8'.

2 CABLE TRAY TRAPEZE HANGING DETAIL
NOT TO SCALE

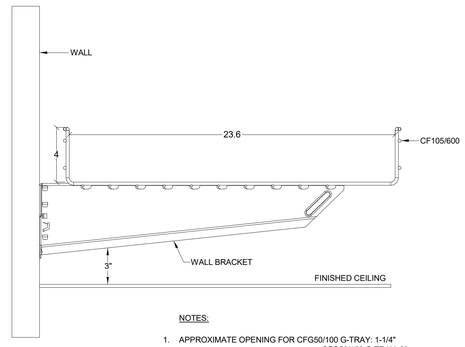

NOTES:

1. APPROXIMATE OPENING FOR CFG50/100 G-TRAY: 1-1/4"
CFG50/150 G-TRAY: 3"
CFG50/200 G-TRAY: 4-7/8"

3 CABLE TRAY - WALL MOUNTED
NOT TO SCALE

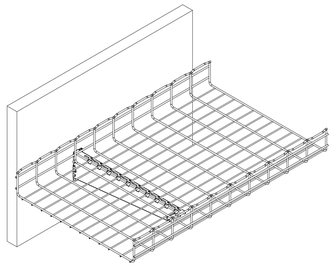

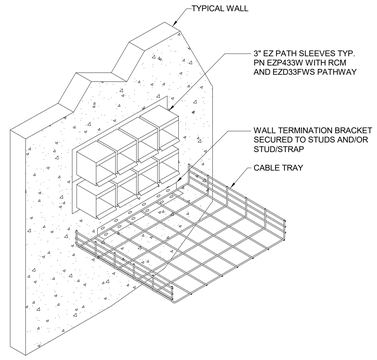

4 CABLE TRAY & CABLE SLEEVE DETAIL
NOT TO SCALE

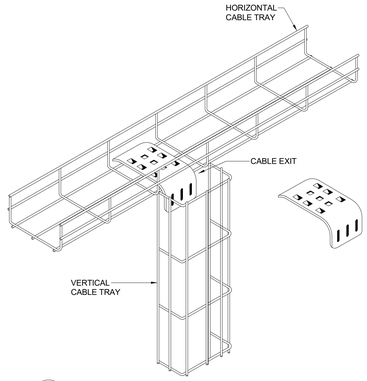

5 CABLE TRAY 'DROP OUT'
NOT TO SCALE

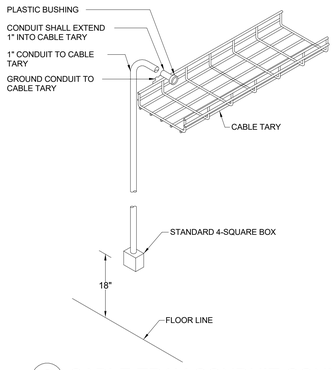

6 CABLE TRAY CONDUIT CONNECTION
NOT TO SCALE

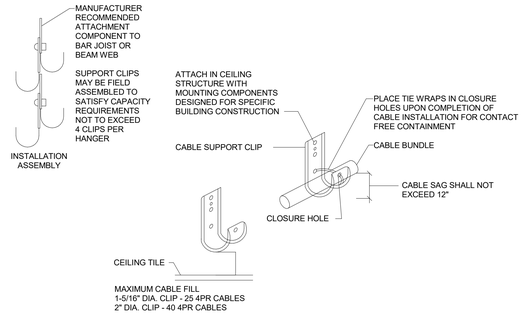

7 HOOK CABLE SUPPORT
NOT TO SCALE

* PROVIDE J-HOOKS IN ALL AREAS NOT SERVED BY CABLE TARY.

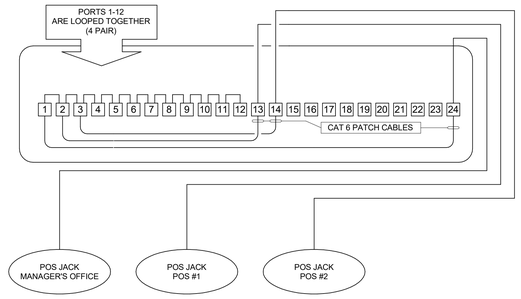

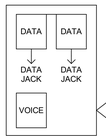

POS AND THE MANAGER'S COMMUNICATION LINES ARE PUNCHED TO THE BACK OF THE PATCH PANEL.
THE MANAGER'S POS LINE WILL BE PUNCHED TO PORT 24. EACH POS LINE IS PUNCHED STARTING AT PORT 13.
REFER TO THE DIAGRAM ABOVE.

TYPICAL COMMUNICATION DATA DROP (2 DATA, 1 VOICE) LOCATED AT EACH POS AND IN THE CAFETERIA MANAGER'S OFFICE
ONE DATA JACK WILL BE USED FOR POS COMMUNICATION (PUNCHED TO NEW "OFNS FOOD SERVICE PATCH PANEL")
OTHER DATA JACK WILL STAY AS DATA (PUNCHED TO EXISTING SCHOOL PATCH PANEL)

1. LABEL EACH JACK IN THE MANAGER'S OFFICE AND EACH POS LOCATION AS EITHER DATA OR POS (1,2,3 ETC.) AND MATCH UP TO THE PATCH PANEL LABELS.
2. LABEL NEW PATCH PANEL "FOOD SERVICE PANEL"

8 "OFNS FOOD SERVICE PATCH PANEL" LOCATED IN SCHOOLS NETWORK WIRING CLOSET
SCALE: NONE

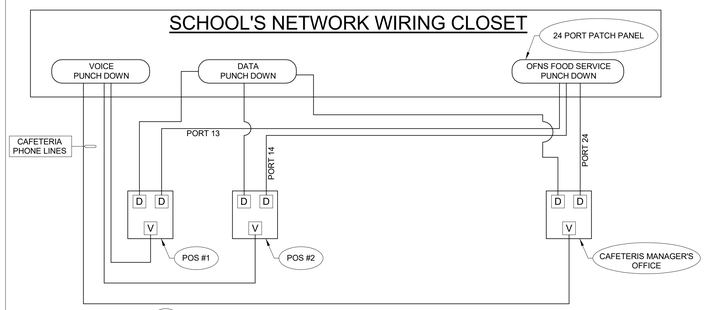

9 DATA/VOICE CONFIGURATION FOR CAFETERIA
SCALE: NONE

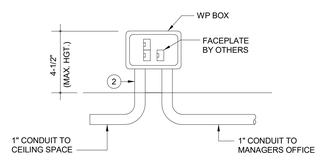

10 CASH REGISTER DATA DETAIL
SCALE: NONE

DETAIL NOTES:

1 PROVIDE SUPPORT PER NEC.
NOTE:
PROVIDE 1" E.C. AT CASH REGISTER WITH WEATHERPROOF BOX.
CONDUIT TO RUN TO CAFETERIA MANAGER'S OFFICE.

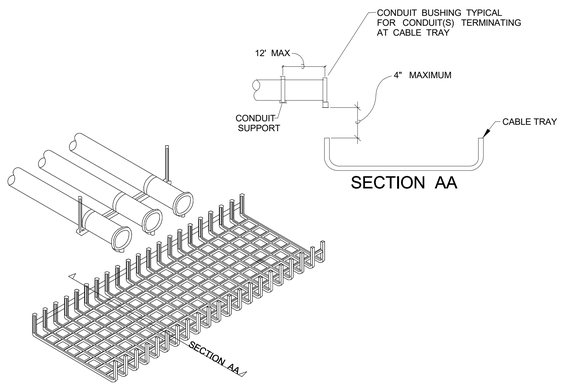

CONDUIT TERMINATION AT CABLE TRAY ISOMETRIC VIEW

DETAIL NOTES:

1. DETAIL TYPICAL FOR ALL TELECOMMUNICATION / DATA CONDUITS FROM BACKBOARDS TERMINATING AT CABLE TRAY, UNLESS NOTED OTHERWISE
2. TELECOMMUNICATIONS/DATA CONDUITS SHOWN ARE FOR ILLUSTRATION PURPOSES ONLY. PROVIDE CONDUITS AS INDICATED ON PLANS OR WITHIN SPECIFICATIONS.
3. SEE PLANS AND SPECIFICATIONS FOR ADDITIONAL REUIREMENTS.

11 TELECOMMUNICATIONS/DATA CONDUIT(S) TERMINATING AT CABLE TRAY DETAIL

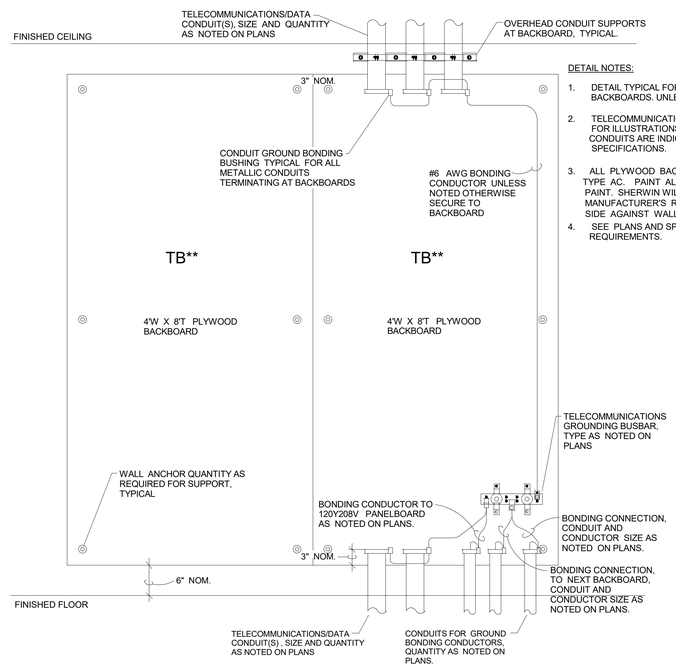

DETAIL NOTES:

1. DETAIL TYPICAL FOR ALL TELECOMMUNICATIONS/ DATA BACKBOARDS, UNLESS NOTED OTHERWISE.
2. TELECOMMUNICATIONS/DATA SHOWN ARE FOR ILLUSTRATIONS PURPOSE ONLY. PROVIDE CONDUITS ARE INDICATED ON PLANS AND WITHIN SPECIFICATIONS.
3. ALL PLYWOOD BACKBOARDS SHALL BE $\frac{3}{4}$" THICK TYPE AC. PAINT ALL 6 SIDES WITH FIRE RETARDANT PAINT. SHERWIN WILLIAMS "FLAME-CONTROL". PER MANUFACTURER'S RECOMMENDATIONS. MOUNT "C" SIDE AGAINST WALL.
4. SEE PLANS AND SPECIFICATIONS FOR ADDITIONAL REQUIREMENTS.

12 TELECOMMUNICATIONS/DATA BACKBOARD DETAIL
SCALE: NONE

STATE OF MARYLAND — JAMES WALLIS WRIGHT — No. 22080 — PROFESSIONAL ENGINEER

Professional Certification:
I hereby certify that these documents were prepared or approved by me, & I am a duly licensed professional engineer under the laws of the State of Maryland License #22080, Expiration: 10-14-2016

Wright Engineering, LLC
Consulting Engineers
853 Ripple Stream Court
Joppa, MD 21085
P (410) 877-6297 F (866) 635-0374
www.wrightengineering.net

THIS DOCUMENT IS THE PROPERTY OF WRIGHT ENGINEERING, LLC. ANY REPRODUCTION OR USE WITHOUT WRITTEN PERMISSION IS PROHIBITED.

11720 Baltsville Drive
Suite 600
Calverton, MD 20705
Tel: 301.595.1000
www.grimmandparker.com

GRIMM AND PARKER

GP #21541

DETAILS - TELECOM

LANSDOWNE ELEMENTARY SCHOOL
2301 ALMA ROAD, BALTIMORE, MD

DATE	DESCRIPTION

T-5.3
09/29/16
BID SET

© GRIMM AND PARKER, P.C. 2014

© GRIMM AND PARKER, P.C. 2014

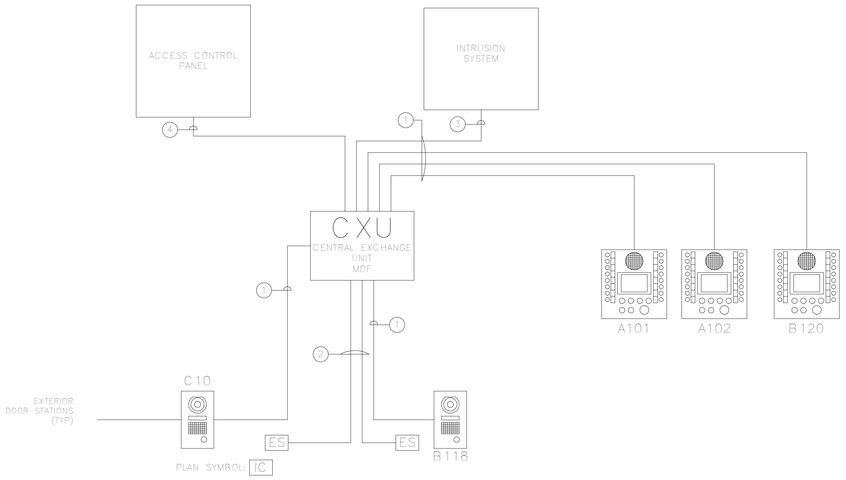

VIDEO ENTRY SYSTEM DIAGRAM DRAWING NOTES:

1. PROVIDE CAT 6 CABLE FROM DEVICE TO CXU.
2. PROVIDE 2 CONDUCTOR #14AWG FROM ELECTRIC DOOR HARDWARE TO CXU.
3. PROVIDE RS-232 CABLE FROM CXU TO SECURITY CAMERA CONTROL.
4. PROVIDE INTERFACE CABLE WITH ACCESS CONTROL SYSTEM.

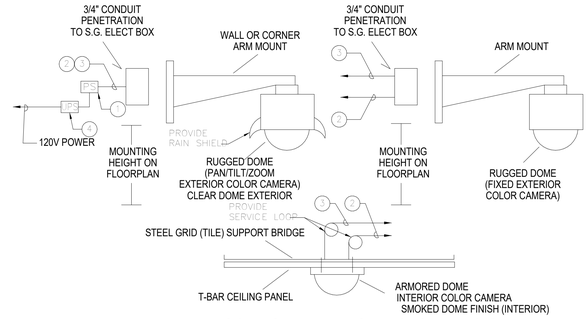

TYP. CCTV CAMERA MOUNTING DETAILS

CAMERA MOUNT DETAIL NOTES:

1. PROVIDE DEDICATED 24V AC 100VA CAMERA POWER SUUPLY FOR EACH EXTERIOR PTZ CAMERA.
2. PROVIDE CAT 6 CABLE FROM EACH CAMERA TO NEAREST IDF/MDF TELECOM RACK.
3. PROVIDE 2 CONDUCTOR #16 AWG CABLE FROM LOW VOLTAGE CAMERA POWER FROM PTZ CAMERA TO CAMERA POWER SUPPLY.
4. PROVIDE 1500VA UPS FOR EACH EXTERIOR PTZ CAMERA POWER SUPPLY.

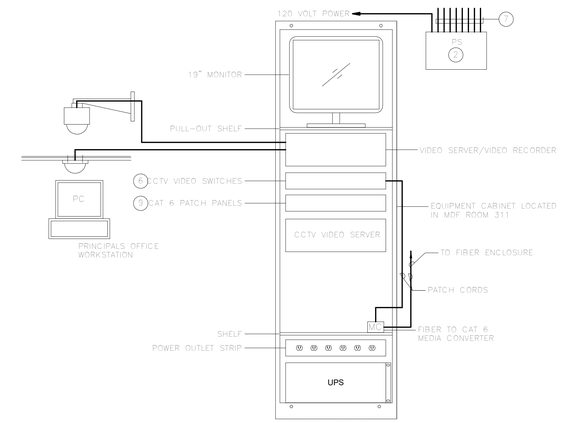

CCTV RACK

NO SCALE

(REFER TO VIDEO SURVEILLANCE SCHEDULE NOTES)

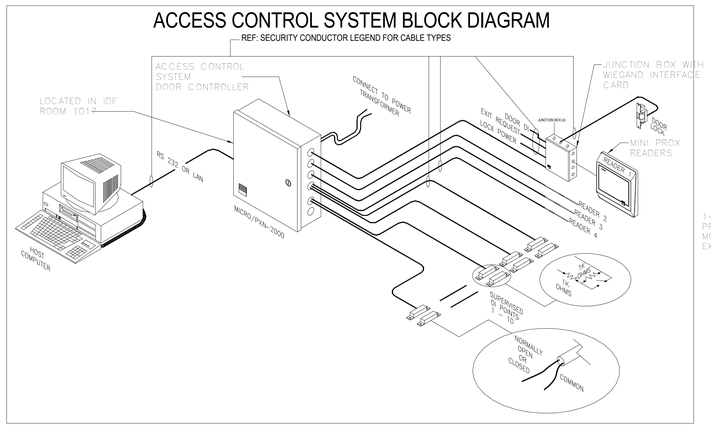

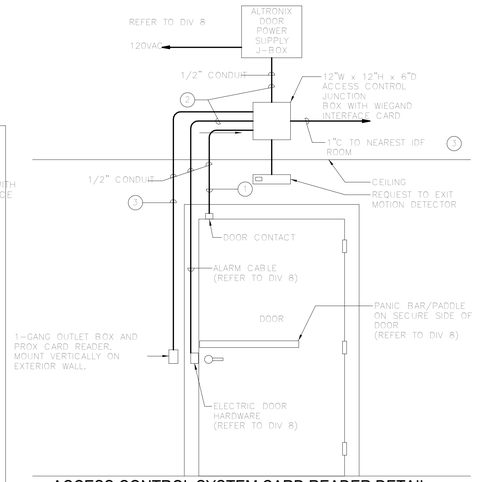

ACCESS CONTROL SYSTEM CARD READER DETAIL

PLAN SYMBOL: CR

ACCESS CONTROL SYSTEM CARD READER DETAIL DRAWING NOTES:

1. DOOR CONTACT: ONE 4 CONDUCTOR #22 AWG STRANDED.
2. LOCK POWER: ONE 4 CONDUCTOR #18 AWG STRANDED.
3. CARD READER: ONE 6 CONDUCTOR #18 AWG TWISTED SHIELDED PAIR.

SECURITY CABLES/CONDUCTORS		
REF.	FUNCTION	CABLE/CONDUCTOR TYPE & SIZE
1A	ADDRESSABLE LOOP	16AWG, WEST PENN 25225B
1D	DOOR SWITCH & TEMP SENSOR CIRCUIT	#18AWG TWISTED PAIR CABLE UNSHIELDED WEST PENN 25224B
1K	KEYPAD CIRCUIT	#16AWG 4 CONDUCTOR WEST PENN 25245
1S	SIREN CIRCUIT	#18AWG TWISTED PAIR CABLE UNSHIELDED WEST PENN 25224B
CR	CARD READER INTERFACE	6 CONDUCTOR 22AWG WEST PENN 25270B
ES	ELECTRIC STRIKE INTERFACE	1 PAIR TWISTED 16AWG FOR POWER WEST PENN 25225B/1 PAIR TWISTED 22AWG FOR SIGNAL WEST PENN 25291B
RTX	REQUEST TO EXIT INTERFACE	#18AWG TWISTED PAIR CABLE UNSHIELDED WEST PENN 25224B
CD	RS232 COMMUNICATION DATA CONTROLLER	2 PAIR 22AWG WEST PENN 25510B
DC	DOOR CONTACT INTERFACE	1 PAIR 16AWG AC POWER WEST PENN 25225B
P	TEMP SENSOR POWER	1 PAIR 16AWG AC POWER WEST PENN 25225B

WIRING SYMBOLS

P	POWER CIRCUIT: P
1A	ADDRESSABLE LOOP: 1A
1D	DOOR SWITCH/TEMP SENSOR CIRCUIT: 1D
1K	KEYPAD CIRCUIT: 1K
1S	SIREN CIRCUIT: 1S

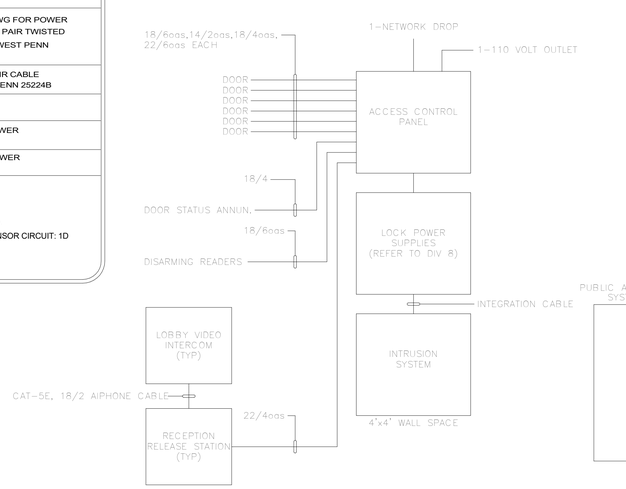

ACCESS CONTROL RISER DIAGRAM

NO SCALE

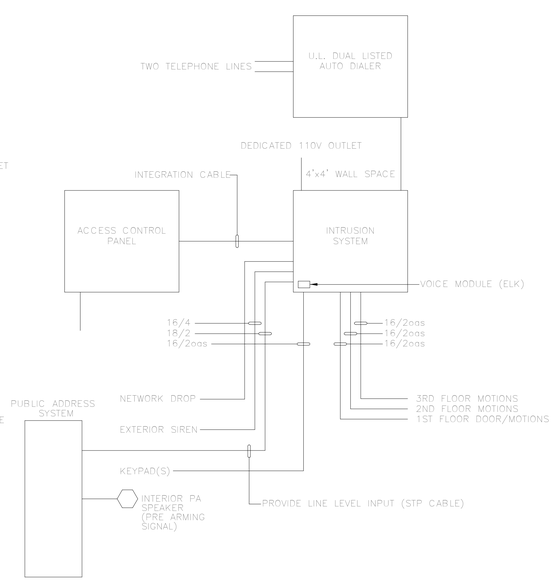

INTEGRATED INTRUSION ALARM RISER DIAGRAM

NO SCALE

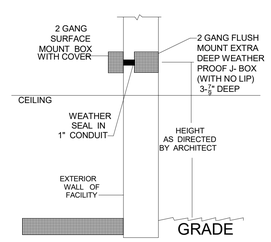

EXTERIOR SPEAKER

NO SCALE

SYMBOL H WP

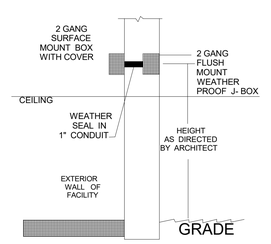

EXTERIOR SECURITY CAMERA

NO SCALE

SYMBOL

STATE OF MARYLAND JAMES WALLIS WRIGHT No. 22268 PROFESSIONAL ENGINEER

Professional Certification:
I hereby certify that these documents were prepared or approved by me, & I am a duly licensed professional engineer under the laws of the State of Maryland License No. 22268, Expiration: 10-14-2016

Wright Engineering, LLC
Consulting Engineers
853 Ripple Stream Court
Joppa, MD 21085
P (410) 877-6297 F (866) 635-0374
www.wrightengineering.net

THIS DOCUMENT IS THE PROPERTY OF WRIGHT ENGINEERING, LLC AND MAY NOT BE REPRODUCED OR TRANSMITTED IN WHOLE OR IN PART WITHOUT THE EXPRESS PERMISSION OF WRIGHT ENGINEERING, LLC

11720 Beltsville Drive
Suite 600
Calverton, MD 20705
Tel: 301.595.1000

www.grimmandparker.com

GRIMM AND PARKER

GP #21541

DETAILS - TELECOM

LANSDOWNE ELEMENTARY SCHOOL
2301 ALMA ROAD, BALTIMORE, MD

DATE	DESCRIPTION

T-5.4

09/29/16
BID SET

© GRIMM AND PARKER, P.C. 2014

© GRIMM AND PARKER, P.C. 2014

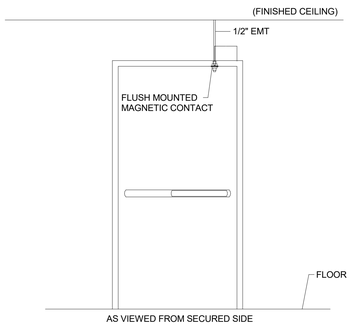

1 SINGLE DOOR ALARM CONTACT PLACEMENT

NO SCALE

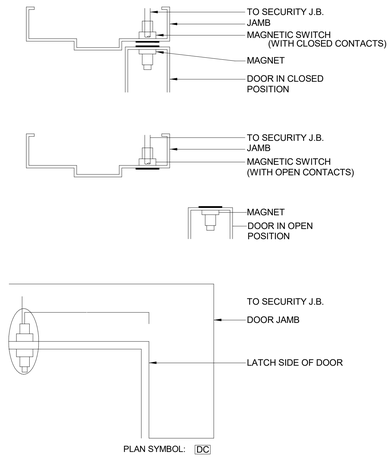

2 RECESSED ALARM CONTACT

NO SCALE

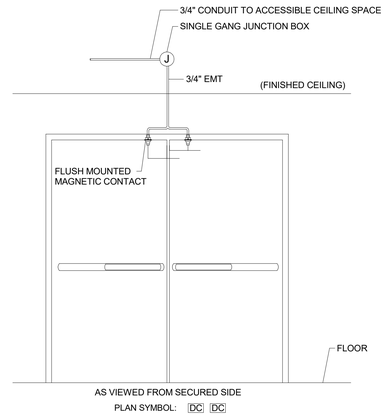

3 DOUBLE DOOR ALARM CONTACT

NO SCALE

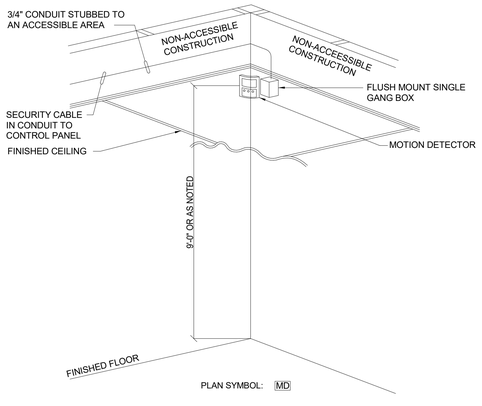

4 MOTION DETECTOR NON-ACCESSIBLE CEILING ELEVATION TYPICAL DETAIL

NO SCALE

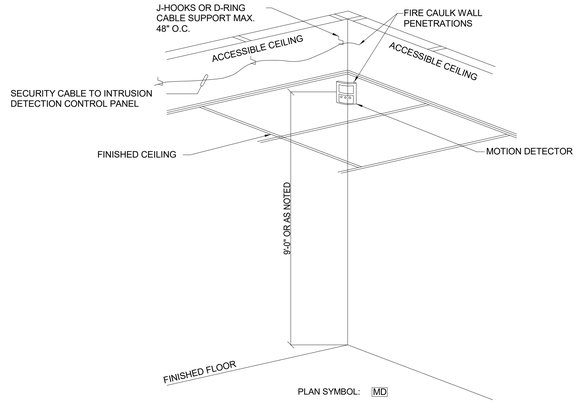

5 MOTION DETECTOR ACCESSIBLE CEILING ELEVATION TYPICAL DETAIL

NO SCALE

STATE OF MARYLAND
JAMES WALLIS WRIGHT
No. 22088
PROFESSIONAL ENGINEER

Professional Certification:
I hereby certify that these documents were prepared or approved by me, & I am a duly licensed professional engineer under the laws of the State of Maryland License No. 22088, Expiration: 10-14-2016

Wright Engineering, LLC
Consulting Engineers
853 Ripple Stream Court
Joppa, MD 21085
P (410) 877-6297 F (866) 635-0374
www.wrightengineering.net

PROPRIETARY INFORMATION: THIS DOCUMENT IS THE PROPERTY OF WRIGHT ENGINEERING, LLC. REPRODUCTION OR USE FOR ANY PURPOSE OTHER THAN THAT AUTHORIZED BY WRIGHT ENGINEERING, LLC IS PROHIBITED.

11720 Beltsville Drive
Suite 600
Calverton, MD 20705
Tel: 301.595.1000

www.grimmandparker.com

GRIMM AND PARKER

GP #21541

DETAILS - TELECOM

LANSDOWNE ELEMENTARY SCHOOL
2301 ALMA ROAD, BALTIMORE, MD

DATE	DESCRIPTION

T-5.5

09/29/16
BID SET

© GRIMM AND PARKER, P.C. 2014

© GRIMM AND PARKER, P.C. 2014

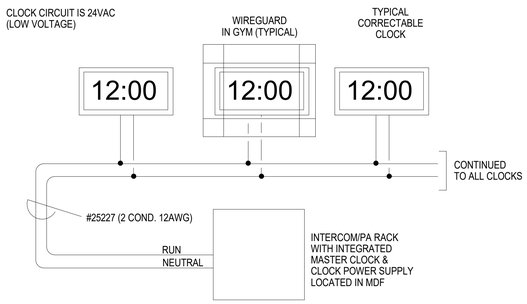

CORRECTABLE CLOCK SYSTEM
WIRING DETAIL

1 CLOCK WIRING & CCTV MOUNTING DETAILS

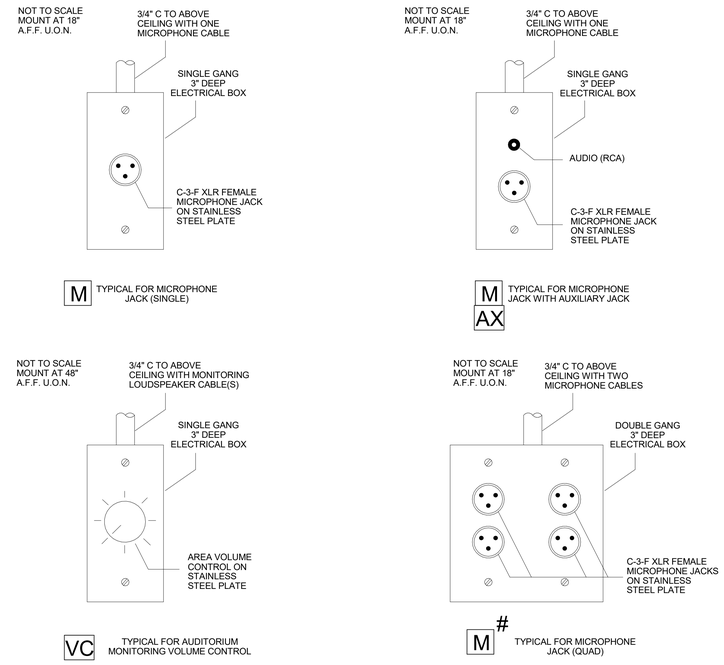

TYPICALS - REFER TO FLOOR PLANS FOR DEVICE LOCATIONS &
QUANTITIES ALL BACKBOXES ARE EXTRA-DEEP (3") OR (3.5") TYPES

2 SOUND SYSTEM OUTLET DETAILS

STATE OF MARYLAND
JAMES WALLIS WRIGHT
No. 22088
PROFESSIONAL ENGINEER

Professional Certification:
I hereby certify that these documents were prepared or approved by me, & I am a duly licensed professional engineer under the laws of the State of Maryland License # 22088, Expiration: 10-14-2016

Wright Engineering, LLC
Consulting Engineers
853 Ripple Stream Court
Joppa, MD 21085
P (410) 877-6297 F (866) 635-0374
www.wrightengineering.net

PROPRIETARY INFORMATION: THIS DOCUMENT IS THE PROPERTY OF WRIGHT ENGINEERING, LLC. REPRODUCTION OR USE FOR ANY PURPOSE OTHER THAN THAT AUTHORIZED BY WRIGHT ENGINEERING, LLC IS PROHIBITED.

11720 Beltsville Drive
Suite 600
Calverton, MD 20705
Tel: 301.595.1000
www.grimmandparker.com
GRIMM AND PARKER

GP #21541

DETAILS - TELECOM

LANSDOWNE ELEMENTARY SCHOOL
2301 ALMA ROAD, BALTIMORE, MD

DATE	DESCRIPTION

T-5.6

09/29/16
BID SET

© GRIMM AND PARKER, P.C. 2014

© GRIMM AND PARKER, P.C. 2014

NOTES:
DRAWING NOT-TO-SCALE - FOR ILLUSTRATIVE PURPOSES ONLY
REFER TO FLOORPLAN DRAWINGS FOR MOUNTING HEIGHTS
NOTE: ORIENTATION OF SE BACKBOX FOR DOWNWARD AIMING OF LOUDSPEAKER DIRECTIONAL LOUVERS

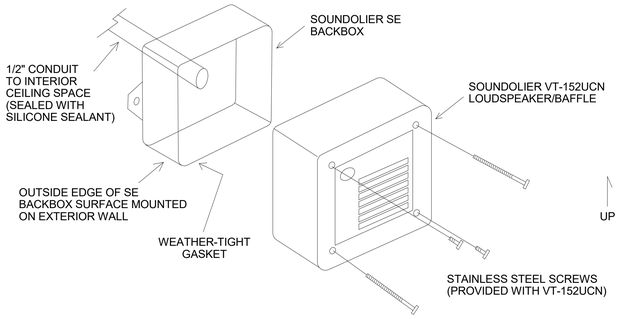

1 SURFACE WEATHER-PROOF LOUDSPEAKER MOUNTING DETAIL

NOTES:
DRAWING NOT-TO-SCALE - FOR ILLUSTRATIVE PURPOSES ONLY
LEFT OR RIGHT CABINET SWING TO BE DETERMINED IN FIELD
ILLUSTRATION IS TYPICAL FOR EACH LOCATION

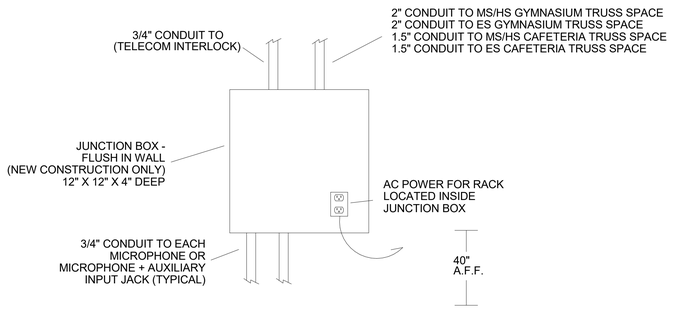

2 ES CAFETERIA AND, GYMNASIUM SOUND SYSTEMS ROUGH-IN DETAILS

NOTES:
DRAWING NOT-TO-SCALE - FOR ILLUSTRATIVE PURPOSES ONLY

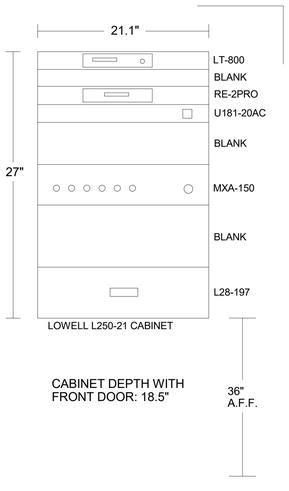

ES CAFETERIA SOUND SYSTEM RACK LAYOUT (TYPICAL)

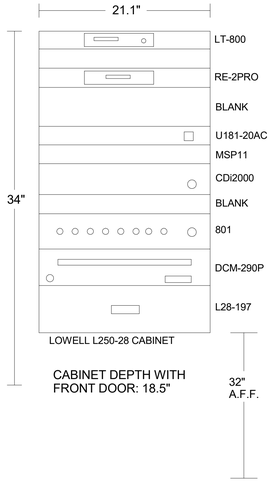

ES GYMNASIUM SOUND SYSTEM RACK LAYOUT

3 LOCAL SOUND SYSTEM CABINET (RACK) LAYOUTS

NOTES:
DRAWING NOT-TO-SCALE - FOR ILLUSTRATIVE PURPOSES ONLY

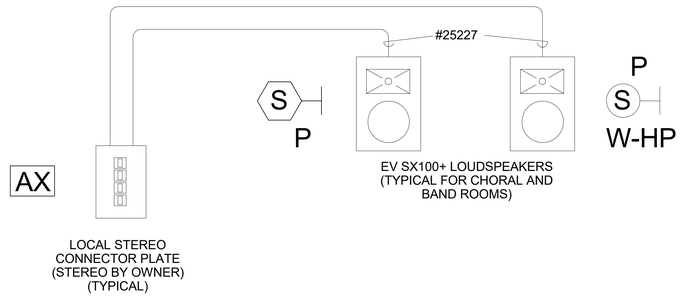

4 MUSIC ROOMS LOCAL STEREO BLOCK DIAGRAM (TYPICALS)

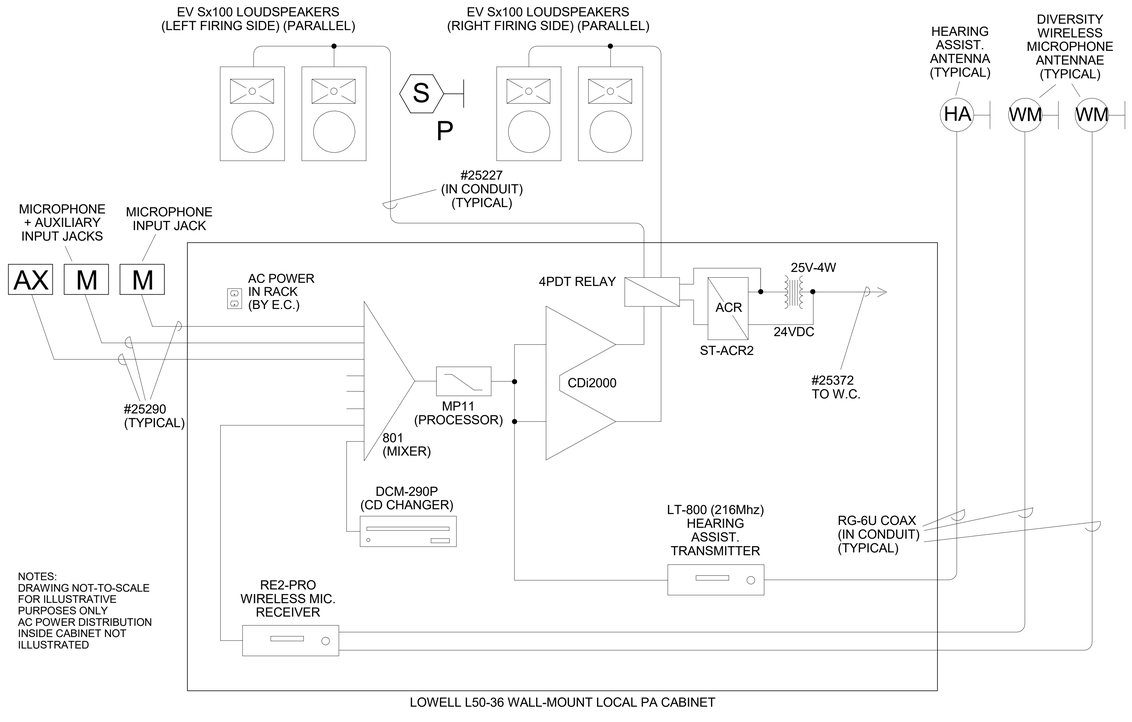

NOTES:
DRAWING NOT-TO-SCALE FOR ILLUSTRATIVE PURPOSES ONLY
AC POWER DISTRIBUTION INSIDE CABINET NOT ILLUSTRATED

5 GYMNASIUM SOUND SYSTEM BLOCK DIAGRAM

STATE OF MARYLAND — JAMES WALLIS WRIGHT — No. 22088 — PROFESSIONAL ENGINEER

Professional Certification:
I hereby certify that these documents were prepared or approved by me, & I am a duly licensed professional engineer under the laws of the State of Maryland License # 22088, Expiration: 10-14-2016

Wright Engineering, LLC
Consulting Engineers
853 Ripple Stream Court
Joppa, MD 21085
P (410) 877-6297 F (866) 635-0374
www.wrightengineering.net

PROFESSIONAL ENGINEER'S SEAL AND SIGNATURE ARE VALID ONLY FOR THE DOCUMENTS ISSUED ON THE DATE SHOWN. THE ENGINEER ASSUMES NO RESPONSIBILITY FOR DOCUMENTS MODIFIED AFTER ISSUANCE.

11720 Beltsville Drive
Suite 600
Calverton, MD 20705
Tel: 301.595.1000
www.grimmandparker.com
GRIMM AND PARKER

GP #21541

DETAILS - TELECOM

LANSDOWNE ELEMENTARY SCHOOL
2301 ALMA ROAD, BALTIMORE, MD

DATE	DESCRIPTION

T-5.7

09/29/16
BID SET

© GRIMM AND PARKER, P.C. 2014